INOVANCE

FORWARD, ALWAYS PROGRESSING



IS810P Series Standard Servo Drive (Multidrive System)

Design and Maintenance User Guide

Industrial Automation | Intelligent Elevator | New Energy Vehicle | Industrial Robot | Rail Transit

Data code 19011887 A00

Preface

Thank you for purchasing the IS810P series servo drive.

The IS810P series is a high-performance full-power AC servo drive developed by Inovance. The series covers a power range from 2.2 kW to 75 kW. It supports the Modbus, CANopen, and CANlink communication protocols and provides the corresponding communication ports. Networking of multiple IS810P servo drives can be implemented with a host controller. It features functions such as rigidity meter setting, inertia auto-tuning, and vibration suppression, simplifying operations. It delivers quiet and stable operation and accurate positioning control when working with the small-inertia and medium-inertia MS1 series high-response servo motors and ISMG series high-power servo motors (configured with the 20-bit or 23-bit incremental encoder or 23-bit multi-turn absolute encoder). The IS810P series servo drive implements fast and accurate position control, speed control, and torque control on automation equipment, such as semiconductor manufacturing equipment, chip mounters, PCB punching machines, transport machinery, food processing machinery, machine tools, and conveying machinery.

This general user guide presents the safety precautions, instructions for mechanical and electrical installation, and commissioning and maintenance guidance of the IS810P servo drive. Read and understand this user guide before first-time use. If you have any questions about the product function or performance, contact Inovance for technical support.

This guide may be updated in line with continuous product improvement without notice.

Notes
◆ For the illustration purpose, some drawings in this guide show the product without covers or protective guards. Remember to install the covers or protective guards as specified before using the product. Operate the product following the instructions.
◆ Drawings in this guide are for illustration only. The structural details may not match the product you purchase.
◆ The information in this guide is subject to changes due to product upgrades or specification modifications, as well as efforts to increase the accuracy and convenience of the guide.

International certifications:

The IS810P series servo drive and MS1/ISMG motor comply with the following international standards. Some models have passed CE certification.

IEC/EN 61800-5-1:2007 Adjustable Speed Electrical Power Drive Systems - Part 5-1: Safety Requirements

IEC/EN 61800-3:2004+A1:2012 Adjustable Speed Electrical Power Drive Systems

Part 3: Adjustable Speed Electrical Power Drive Systems - EMC Requirements and Specific Test Methods: The product complies with the requirements of standard IEC/EN 61800-3 on the condition of correct installation and use.

IEC/EN 60034-1:2010 Rotating Electrical Machines - Part 1: Rating and Performance

Revision History

Date	Version	Change Description
September 2022	A00	First release

Contents

Safety Precautions ····· 9
Chapter 1 Product Information ····· 14
1.1 Drive Unit ····· 14
1.1.1 Designation Rules and Nameplate ····· 14
1.1.2 Components of the Drive Unit ····· 15
1.1.3 Specifications ····· 16
1.2 Servo Motor ····· 20
1.2.1 Specifications of MS1 Series Servo Motor ····· 20
1.2.2 Specifications of ISMG Series Servo Motor ····· 30
1.3 System Specifications ····· 36
1.4 Cables ····· 37
1.4.1 Cables for MS1 Series Motor (Including Communication Cable) ····· 37
1.4.2 Cables for ISMG Series Motor (Including Communication Cable) ····· 39
Chapter 2 Installation ····· 40
2.1 Installation of the Power Supply Unit and Drive Unit ····· 40
2.1.1 Installation Environment ····· 40
2.1.2 Requirements of Installation Dimensions and Clearance ····· 41
2.2 Installation of the Servo Drive ····· 45
2.2.1 Cabinet-mounted Installation ····· 45
2.2.2 Removal and Installation of Power Supply Unit Covers ····· 47
2.2.3 Backplate Mounting ····· 48
2.3 Installation of the Servo Motor ····· 50
2.3.1 Installation Precautions ····· 50
2.3.2 Installation Environment ····· 51
2.3.3 Outline Dimensions of MS1 Series Motor ····· 52
2.3.4 Outline Dimensions of ISMG Series Motor ····· 60
Chapter 3 Wiring ····· 63
3.1 Servo System Wiring ····· 65
3.2 Terminals of Power Supply Unit ····· 65
3.3 Terminals of Drive Unit ····· 66
3.3.1 Arrangement of Drive Unit Terminals ····· 66
3.3.2 Functions of Drive Unit Terminals ····· 67
3.4 Connection Between Power Supply Unit and Drive Unit ····· 67
3.4.1 Connection Through DC Bus ····· 67
3.4.2 PE Connection Diagram ····· 68
3.4.3 24 V Control Power Supply ····· 68
3.5 Main Circuit Wiring of Servo Drive ····· 70
3.5.1 Recommended Models and Specifications of Main Circuit Cables ····· 70

3.5.2 Cable Lug Selection ····· 70
3.6 Connection Between Drive Unit and Motor ····· 73
3.6.1 Grounding Requirements ····· 73
3.6.2 Connection with MS1 Series Motor ····· 73
3.6.3 Connection with ISMG Series Motor ····· 80
3.7 Connection of Control Signal Terminals ····· 85
3.7.1 Position Reference Input Signals ····· 87
3.7.2 Analog Input (AI) Signals ····· 97
3.7.3 Digital Input/Digital Output (DI/DO) Signals ····· 98
3.7.4 Encoder Frequency-Division Output Circuit ····· 102
3.7.5 Wiring of the Brake ····· 104
3.8 Wiring of Communication Signal Terminals CN3 and CN4 ····· 109
3.8.1 Pins of Communication Signal Terminal Connectors ····· 109
3.8.2 CAN Communication Connections ····· 110
3.8.3 RS485 Communication Connections ····· 112
3.8.4 RS232 Communication Connection with PC ····· 114
3.9 Wiring of Analog Monitoring Signals ····· 115
3.10 Anti-Interference Measures for Electrical Wiring ····· 117
3.10.1 Anti-Interference Wiring Example and Grounding ····· 117
3.10.2 Use of the Noise Filter ····· 118
3.11 Precautions of Using Cables ····· 121
3.12 Overall Wiring Diagram ····· 121
Chapter 4 Operating Panel Operations ····· 122
4.1 Panel Components ····· 123
4.2 Operating Panel Display ····· 123
4.2.1 Display Mode Switchover ····· 123
4.2.2 Status Display ····· 124
4.2.3 Parameter Display ····· 124
4.2.4 Fault Display ····· 126
4.2.5 Monitored Value Display ····· 126
4.3 Parameter Setting ····· 133
4.4 User Password ····· 134
4.5 Common Functions ····· 136
4.5.1 Jogging ····· 136
4.5.2 Forced DI/DO Signals ····· 137
4.6 Basic Operation and Trial Run ····· 142
4.6.1 Checklist Before Power-on ····· 142
4.6.2 Checklist After Power-on ····· 142
Chapter 5 Control Modes ····· 143
5.1 Basic Setting ····· 144

5.1.1 Checklist Before Running ····· 145
5.1.2 Power Supply Connection ····· 145
5.1.3 Jogging ····· 147
5.1.4 Rotation Direction Selection ····· 148
5.1.5 Output Pulse Phase Selection ····· 148
5.1.6 Brake Setting ····· 149
5.1.7 Servo ON ····· 154
5.1.8 Servo OFF ····· 160
5.2 Position Control Mode ····· 163
5.2.1 Position Reference Input Setting ····· 163
5.2.2 Electronic Gear Ratio ····· 180
5.2.3 Position Reference Filter ····· 186
5.2.4 Position Deviation Cleared ····· 187
5.2.5 Frequency-Division Output ····· 188
5.2.6 Positioning Completed/Near ····· 191
5.2.7 Interrupt Positioning ····· 195
5.2.8 Homing ····· 199
5.2.9 Function Code Block Diagram of Position Control Mode ····· 216
5.3 Speed Control Mode ····· 216
5.3.1 Speed Reference Input Setting ····· 217
5.3.2 Setting the Ramp Function ····· 231
5.3.3 Zero Clamp Function ····· 232
5.3.4 Speed Reference Limit ····· 233
5.3.5 Speed-related DO Signals ····· 233
5.3.6 Function Code Block Diagram of Speed Control Mode ····· 237
5.4 Torque Control Mode ····· 239
5.4.1 Torque Reference Input Setting ····· 239
5.4.2 Torque Reference Filter ····· 247
5.4.3 Torque Reference Limit ····· 249
5.4.4 Speed Limit in Torque Control ····· 257
5.4.5 Torque Reached Output ····· 261
5.4.6 Function Code Block Diagram of Torque Control Mode ····· 262
5.5 Hybrid Control Mode ····· 263
5.6 Description of Absolute System ····· 264
5.6.1 Overview ····· 264
5.6.2 Relevant Parameter Setting ····· 265
5.6.3 Precautions for Battery Box of Absolute System ····· 270
5.6.4 Soft Limit Function ····· 270
5.7 Auxiliary Functions ····· 272
5.7.1 Software Reset ····· 272
5.7.2 Motor Protection ····· 272
5.7.3 DI Filter Time ····· 274

5.7.4 Brake Protection Detection Function ····· 276
Chapter 6 Adjustment ····· 277
6.1 Overview ····· 277
6.2 Inertia Auto-Tuning ····· 279
6.2.1 Offline Inertia Auto-Tuning ····· 280
6.2.2 Online Inertia Auto-Tuning ····· 282
6.3 Automatic Gain Adjustment ····· 283
6.4 Manual Gain Adjustment ····· 286
6.4.1 Basic Parameters ····· 286
6.4.2 Gain Switchover ····· 289
6.4.3 Filter Comparison ····· 293
6.4.4 Feedforward Gain ····· 294
6.4.5 PDFF Control ····· 296
6.4.6 Torque Disturbance Observer ····· 297
6.5 Parameter Adjustment in Different Control Modes ····· 298
6.5.1 Parameter Adjustment in the Position Control Mode ····· 298
6.5.2 Parameter Adjustment in the Speed Control Mode ····· 300
6.5.3 Parameter Adjustment in the Torque Control Mode ····· 300
6.6 Vibration Suppression ····· 300
6.6.1 Suppression of Mechanical Resonance ····· 300
6.6.2 Suppression of Low-Frequency Resonance ····· 306
Chapter 7 Communication ····· 309
7.1 Modbus Communication ····· 309
7.1.1 Hardware Connection and EMC Notice ····· 309
7.1.2 EMC Requirements ····· 311
7.1.3 Relationship Between RS485 Transmission Distance, Node, and Baud Rate · 312
7.1.4 Communication Parameter Setting ····· 312
7.1.5 Modbus Communication Protocol ····· 317
7.1.6 RS485 Communication Troubleshooting ····· 324
7.2 CANlink Communication ····· 327
7.2.1 Hardware Connection ····· 327
7.2.2 CANlink Communication Parameter Setting ····· 327
7.2.3 CANlink Communication Troubleshooting ····· 328
7.3 CANopen Communication ····· 329
7.3.1 Hardware Connection ····· 329
7.3.2 CANopen Communication Parameter Setting ····· 330
7.3.3 CANopen Communication Troubleshooting ····· 331
7.4 VDI/VDO ····· 331
Chapter 8 CANopen Communication Cases ····· 334
8.1 PROFINET-to-CANopen Gateway of MD810 Power Supply Unit ····· 334
8.1.1 PROFINET-to-CANopen Gateway ····· 334

8.1.2 PROFINET-to-CANopen Gateway with Siemens S7-1500 PLC ····· 334
8.2 PROFIBUS-DP-to-CANopen Gateway of MD810 Power Supply Unit ····· 347
8.2.1 Networking ····· 347
8.2.2 Communication Performance ····· 347
8.2.3 Application Instructions ····· 347
Chapter 9 List of Parameters ····· 355
9.1 Parameters of Power Supply Unit ····· 355
9.2 Parameters of Drive Unit ····· 355
9.2.1 Group H00: Servo Motor Parameters ····· 356
9.2.2 Group H01: Servo Drive Parameters ····· 359
9.2.3 Group H02: Basic Control Parameters ····· 359
9.2.4 Group H03: Terminal Input Parameters ····· 366
9.2.5 Group H04: Terminal Output Parameters ····· 379
9.2.6 Group H05: Position Control Parameters ····· 383
9.2.7 Group H06: Speed Control Parameters ····· 403
9.2.8 Group H07: Torque Control Parameters ····· 413
9.2.9 Group H08: Gain Parameters ····· 420
9.2.10 Group H09: Automatic Gain Adjustment Parameters ····· 427
9.2.11 Group H0A: Fault and Protection Parameters ····· 431
9.2.12 Group H0B: Monitoring Parameters ····· 436
9.2.13 Group H0C: Communication Parameters ····· 443
9.2.14 Group H0D: Auxiliary Function Parameters ····· 448
9.2.15 Group H0F: Fully Closed-Loop Parameters ····· 451
9.2.16 Group H11: Multi-Position Parameters ····· 455
9.2.17 Group H12: Multi-Speed Parameters ····· 467
9.2.18 Group H17: VDI/VDO Parameters ····· 476
9.2.19 Group H30: Servo-Related Variables Read Through Communication ····· 485
9.2.20 Group H31: Servo-Related Variables Set Through Communication ····· 487
Chapter 10 Parameter List ····· 489
10.1 Parameters in Group 6000h ····· 489
10.2 Group H00: Servo Motor Parameters ····· 493
10.3 Group H01: Servo Drive Parameters ····· 494
10.4 Group H02: Basic Control Parameters ····· 494
10.5 Group H03: Terminal Input Parameters ····· 496
10.6 Group H04: Terminal Output Parameters ····· 499
10.7 Group H05: Position Control Parameters ····· 501
10.8 Group H06: Speed Control Parameters ····· 506
10.9 Group H07: Torque Control Parameters ····· 507
10.10 Group H08: Gain Parameters ····· 509
10.11 Group H09: Automatic Gain Adjustment Parameters ····· 510

10.12 Group H0A: Fault and Protection Parameters ····· 512
10.13 Group H0B: Monitoring Parameters ····· 514
10.14 Group H0C: Communication Parameters ····· 516
10.15 Group H0D: Auxiliary Function Parameters ····· 517
10.16 Group H0F: Fully Closed-Loop Parameters ····· 518
10.17 Group H11: Multi-Position Parameters ····· 518
10.18 Group H12: Multi-Speed Parameters ····· 523
10.19 Group H17: VDI/VDO Parameters ····· 528
10.20 Group H30: Servo-Related Variables Read Through Communication ····· 532
10.21 Group H31: Servo-Related Variables Set Through Communication ····· 532
10.22 DI/DO Functions ····· 532
Chapter 11 Troubleshooting ····· 540
11.1 Safety Precautions ····· 540
11.2 Logs of Faults and Warnings ····· 540
11.3 Output of Fault and Warning Codes ····· 542
11.3.1 List of Fault Codes ····· 542
11.3.2 List of Earning Codes ····· 543
11.4 Troubleshooting of Faults ····· 544
11.4.1 Troubleshooting of Common Faults ····· 544
11.4.2 Internal Fault ····· 560
11.4.3 Rectification of Communication Faults ····· 560

Safety Precautions

Safety Disclaimer

- Read and comply with the safety precautions during installation, operation, and maintenance of the product.
- For personal and equipment safety, follow all safety precautions marked on the product and described in this guide during installation, operation, and maintenance.
- The "CAUTION", "WARNING", and "DANGER" messages in the guide are supplementary only and do not cover all safety precautions.
- Use this product according to the designated environment requirements. Damage caused by improper use is not covered by warranty.
- Inovance shall not be liable for any physical injuries or property loss caused by improper use.

Safety Levels and Definitions

	Indicates that failure to comply with the notice may result in severe physical injuries or even death.
	Indicates that failure to comply with the notice may result in severe physical injuries or even death.
	Indicates that failure to comply with the notice may result in minor or moderate physical injuries or equipment damage.

Safety Signs

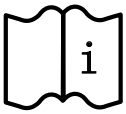	Read the guide before installation and operation.
	Reliably ground the system and equipment.
	Danger!
	High voltage!
	Beware of physical injuries caused by machines.
	High temperature!
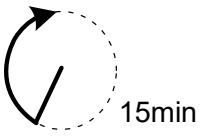	Wait 15 minutes before performing operations.

Safety Precautions

Unpacking
CAUTION ◆ Before unpacking, check whether the packing is intact and without damage, water seepage, damp, and deformation. ◆ Unpack the product in an orderly manner. Do not strike the package with force. ◆ Check whether there is damage, rust, or scratches on the surface of the device or its accessories. ◆ Check whether the number of packing materials is consistent with the packing list.
WARNING ◆ Do not install the product if you find damage, rust, or signs of use on the product or its accessories. ◆ Do not install the product in the case of water seepage in the product, part missing, or part damage. ◆ Do not install the product if you find the packing list does not conform to the product you received.
Storage and Transportation
CAUTION ◆ Store and transport this product in accordance with the storage and transportation requirements for humidity and temperature. ◆ Do not transport or store the product in environments such as water splashing, rain, direct sunlight, strong electric field, strong magnetic field, and strong vibration. ◆ Do not store the product for more than three months. Take stricter prevention measures and perform necessary inspection during prolonged storage. ◆ Pack the product properly before transportation. Use a sealed box for long-distance transportation. ◆ Never transport this product with equipment or materials that may harm or have negative impacts on this product.
WARNING ◆ Use specialized loading and unloading equipment to move large-scale or heavy equipment and products. ◆ When handling this product with bare hands, hold the product casing firmly with care to prevent parts from falling. Failure to comply may result in physical injuries. ◆ Handle the product with care during transportation and mind your step to prevent physical injuries or product damage. ◆ Never stand or stay below the product when it is lifted by hoisting equipment.
Installation
WARNING ◆ Read through the guide and safety instructions before installation. ◆ Do not modify this product. ◆ Do not fiddle with the bolts used to fix equipment components, especially those marked in red. ◆ Do not install this product in places with strong electric or magnetic fields. ◆ To install the product in cabinet or terminal equipment, make sure that the enclosure of the cabinet or terminal equipment provides adequate fire prevention, electrical protection, and mechanical protection conforming to relevant IEC standards and local laws and regulations.

DANGER

◆ Product installation, wiring, maintenance, inspection, or parts replacement must be performed by professionals only.

◆ Installation, wiring, maintenance, inspection, or parts replacement must be performed by only experienced personnel who have been trained with necessary electrical information.

◆ Installation personnel must be familiar with product installation requirements and relevant technical materials.

◆ Before installing equipment with strong electromagnetic interference, such as a transformer, install an electromagnetic shielding device for this product to prevent malfunctions.

Wiring

DANGER

◆ Equipment installation, wiring, maintenance, inspection, and parts replacement must be performed by professionals only.

◆ Never perform wiring with the power supply connected. Failure to comply may result in an electric shock.

◆ Before wiring, cut off all equipment power supplies. Wait at least 10 minutes before further operations because residual voltage exists after power-off.

◆ Make sure that the equipment and product are well grounded. Failure to comply may result in an electric shock.

◆ During wiring, follow the proper electrostatic discharge (ESD) procedures, and wear an anti-static wrist strap. Failure to comply may damage the equipment or internal product circuits.

WARNING

◆ Never connect the power supply cable to output terminals of the equipment or product. Failure to comply may cause equipment damage or even a fire.

◆ When connecting the drive to a motor, make sure that the phase sequences of the drive and motor terminals are consistent to prevent reverse motor rotation.

◆ Cables must meet diameter and shielding requirements. The shield of shielded cables must be reliably grounded at one end.

◆ After wiring, make sure that no screws are left and no cables are exposed in the equipment and product.

Power-on

DANGER

◆ Before power-on, make sure that the equipment and product are installed properly with reliable wiring and the motor can be restarted.

◆ Before power-on, make sure that the power supply meets equipment requirements. Failure to comply may result in product damage or even fire.

◆ At power-on, unexpected operations may be triggered on the equipment or product. Therefore, stay away from the equipment or product.

◆ After power-on, do not open the equipment cabinet door or protective cover of the product. Failure to comply may result in an electric shock.

◆ Do not touch any wiring terminals when power is on. Failure to comply may result in an electric shock.

◆ Do not remove any part or component of the equipment or product when power is on. Failure to comply may result in an electric shock.

Operation

DANGER

◆ Do not touch any wiring terminals during operation. Failure to comply may result in an electric shock.

◆ Do not remove any part or component of the equipment or product during operation. Failure to comply may result in an electric shock.

◆ Do not touch the equipment enclosure, fan, or resistor to check temperature. Failure to comply may result in heat injuries.

◆ Signal detection during operation must be performed by professionals only. Failure to comply may result in physical injuries or equipment damage.

WARNING

◆ Prevent metal and other objects from falling into the device during operation. Failure to comply may result in equipment damage.

◆ Do not use the contactor to start or stop the equipment. Failure to comply may result in equipment damage.

Maintenance
DANGER ◆ Equipment installation, wiring, maintenance, inspection, and parts replacement must be performed by professionals only. ◆ Never perform maintenance when power is on. Failure to comply may result in an electric shock. ◆ Before maintenance, cut off all equipment power supplies and wait at least 15 minutes.
WARNING ◆ Perform daily and periodic inspection and maintenance on the equipment according to maintenance requirements and keep a maintenance record.
Repair
DANGER ◆ Equipment installation, wiring, maintenance, inspection, and parts replacement must be performed by professionals only. ◆ Never perform any inspection or maintenance operations when power is on. Failure to comply may result in an electric shock. ◆ Before inspection and repair, cut off all equipment power supplies and wait at least 15 minutes.
WARNING ◆ Require repair services according to the product warranty agreement. ◆ When the equipment is faulty or damaged, require professionals to perform troubleshooting and repair by following repair instructions and keep a repair record. ◆ Replace quick-wear parts of the product according to the replacement guide. ◆ Do not operate damaged equipment. Failure to comply may result in worse damage. ◆ After the equipment is replaced, perform wiring inspection and parameter settings again.
Disposal
WARNING ◆ Retire equipment in accordance with national regulations and standards. Failure to comply may result in property damage, physical injuries, or even death. ◆ Dispose of or recycle retired equipment in accordance with industry waste disposal standards to avoid environmental pollution.

Safety Signs

For safe equipment operation and maintenance, observe the safety signs on the equipment and products. Do not damage or remove the safety signs. The following table describes the safety signs.

Safety Sign	Description

	Never fail to connect the protective earth (PE) terminal. Read through the guide and follow the safety instructions before use. Do not touch terminals within 15 minutes after disconnecting the power supply. Failure to comply may result in electric shock. Do not touch the heatsink when power is on. Failure to comply may result in burn.

Chapter 1 Product Information

Prepare an MD810 series power supply unit before using this product. For specifications of the related power supply unit, see the MD810 Series Standard Drive (Multidrive System) Advanced User Guide.

1.1 Drive Unit

1.1.1 Designation Rules and Nameplate

IS810 P - 50M 4T 009 - CO

Mark	Drive Series
IS810	IS810 series

Mark	Drive Type
P	Pulse

Mark	Unit Type
50M	Drive unit

Mark	Voltage Class
4T	380 V to 480 V

Mark	Comm. Mode
C	CANlink
CO	CANopen

Mark	Rated Output Current
005	5.1 A
009	9 A
013	13 A
017	17 A
025	25 A
032	32 A
037	37 A
075	75 A
091	91 A
112	112 A
150	150 A

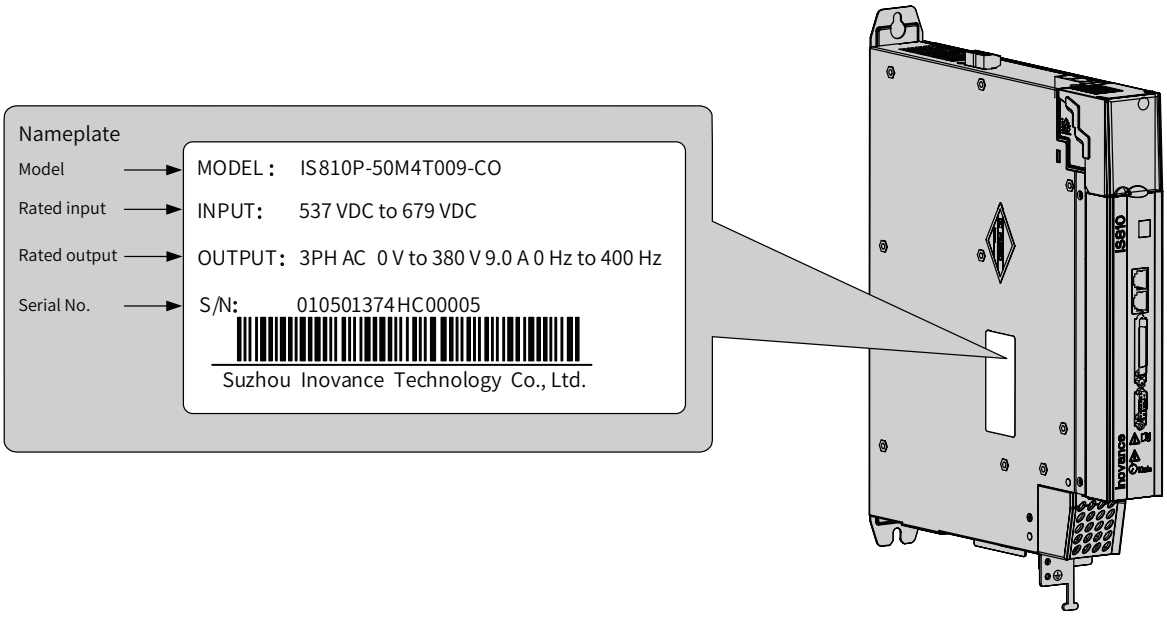

Figure 1-1 Model number and nameplate of the drive unit

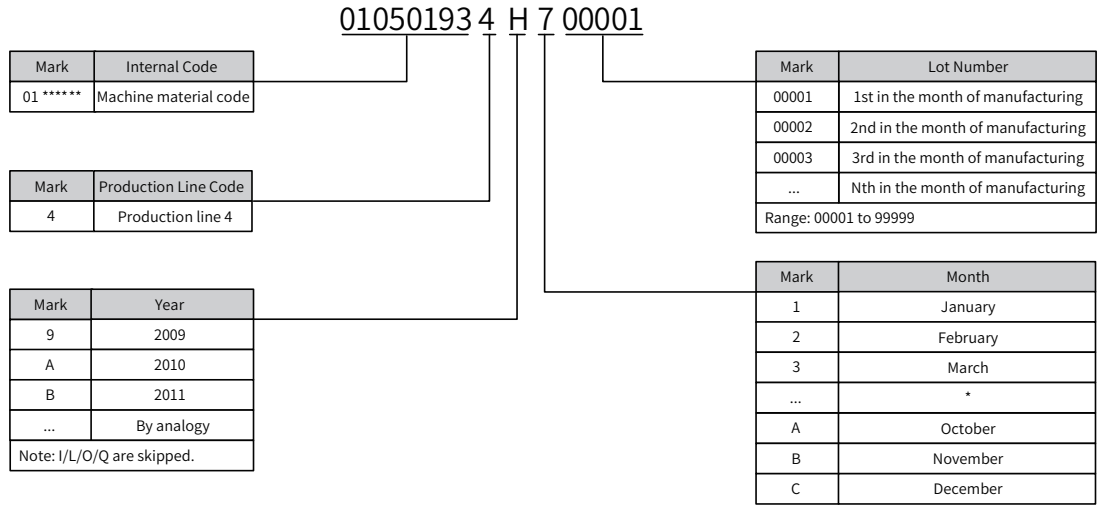

Mark	Internal Code
01 ******	Machine material code

Mark	Production Line Code
4	Production line 4

Mark	Year
9	2009
A	2010
B	2011
...	By analogy
Note: I/L/O/Q are skipped.	

Mark	Lot Number
00001	1st in the month of manufacturing
00002	2nd in the month of manufacturing
00003	3rd in the month of manufacturing
...	Nth in the month of manufacturing
Range: 00001 to 99999	

Mark	Month
1	January
2	February
3	March
...	*
A	October
B	November
C	December

Example: The S/N 010501934H700001 indicates that the drive is manufactured in July, 2017.

Figure 1-2 Serial number of the drive unit

1.1.2 Components of the Drive Unit

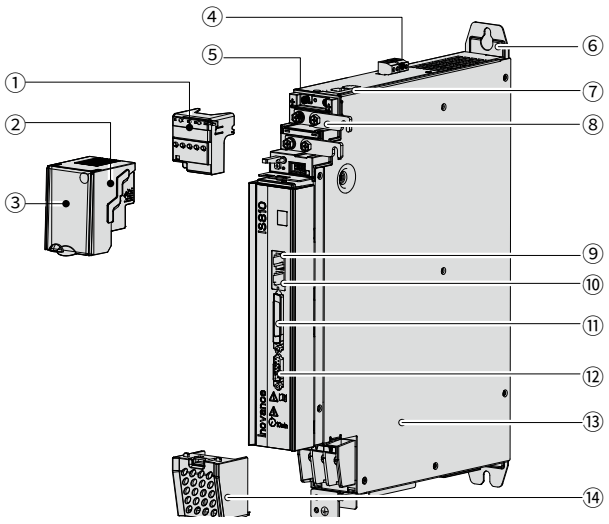

No.	Name
1	Panel cover
2	Bus protective baffle
3	Operating panel
4	Built-in busbar
5	24 V power input
6	Mounting hole
7	RJ45 communication terminal
8	Connecting busbar
9, 10	RS232 and RS485 communication terminals (CO: CAN communication terminal)
11	CN1 input and output terminal
12	CN2 encoder terminal
13	Body
14	Power terminal cover

Figure 1-3 Components of the drive unit

1.1.3 Specifications

1 Electrical specifications

The following tables list specifications of the three-phase 380 V drive units, starting from the T005 model.

Item	SIZE-1		
Drive model IS810P	T005	T009	T013
Continuous output current (Arms)	5.1	9	13
Max. output current (Arms)	14	20	28
Main circuit power supply	537 VDC to 679 VDC		
Control circuit power supply	21.6 VDC to 26.4 VDC		

Item	SIZE-2				
Drive model IS810P	T017	T025	T032	T037	T075
Continuous output current (Arms)	17	25	32	37	75
Max. output current (Arms)	42	65	80	92.5	187.5
Main circuit power supply	537 VDC to 679 VDC				
Control circuit power supply	21.6 VDC to 26.4 VDC				

Item	SIZE-3		
Drive model IS810P	T091	T112	T150
Continuous output current (Arms)	91	112	150
Max. output current (Arms)	227.5	280	380
Main circuit power supply	537 VDC to 679 VDC		
Control circuit power supply	21.6 VDC to 26.4 VDC		

2 Basic specifications

Item				Description
Basic specifications	Control mode			IGBT PWM control, sine wave current drive mode
	Encoder feedback			Inovance 20-bit or 23-bit serial incremental encoder Inovance 23-bit serial absolute encoder
	Operating conditions	Operating/Storage temperature[1]		Operating: 0°C to 40°C (over 40°C: Derate 1.5% for every additional 1°C. The temperature must not exceed 50°C.) Storage: –20°C to +70°C
		Operating/Storage humidity		Below 90% RH (non-condensing)
		Vibration/Impact resistance		Vibration: 4.9 m/s^2 Impact: 19.6 m/s^2
		IP rating		IP20 (except power terminals)
		Pollution degree		2
		Altitude		Below 1000 m. For operation above 1000 m, derate 1% for every additional 100 m. The maximum altitude is 3000 m.
Position control mode	Performance	Feedforward compensation		0% to 100%
		Width of positioning completed		1 to 65535 in encoder unit (resolution: 1 encoder unit)
	Input signal	Pulse reference	Input pulse format	Three formats: direction + pulse, phase A + phase B quadrature pulse, and CW/CCW pulse
			Input mode	Differential input Open collector
			Input pulse frequency	Differential input: For high speed, up to 4 Mpps, pulse width not less than 0.125 μs For low speed, up to 500 kpps, pulse width not less than 1 μs Open collector: up to 200 kpps, pulse width not less than 2.5 μs
		Built-in open collector power supply[4]		+24 V (with a built-in 2.4 kΩ resistor)
		Multi-position reference selection		Four DIs are allocated with functions CMD1, CMD2, CMD3, and CMD4 to provide position references 1 to 16.
	Position output	Output mode		Phase A, phase B: differential output Phase Z: differential output or open collector output
		Frequency division ratio		Arbitrary frequency division

Item				Description
Speed/ Torque control mode	Performance	Speed change rate[2]	Load change rate	Below 0.5% at 0% to 100% load (under rated speed)
			Voltage change rate	0.5% at rated voltage±10% (under rated speed)
			Temperature change rate	Below 0.5% at 25°C±25°C (under rated speed)
		Speed control range		1:5000
		Frequency characteristics		1.2 kHz
		Torque control precision		±2%
		Soft startup time setting		0s to 60s (This parameter can be set for acceleration and deceleration separately.)
	Input signal	Speed reference input	Reference voltage[3]	±10 VDC, ordinary 12 bits, maximum 16 bits (The 16-bit resolution AI port is customized.)
				Input voltage: up to ±12 V
			Input impedance	About 9 kΩ
			Response time	About 47 μs
		Torque reference input	Reference voltage	±10 VDC, ordinary 12 bits, maximum 16 bits (The 16-bit resolution AI port is customized.)
				Input voltage: up to ±12 V
			Input impedance	About 9 kΩ
			Response time	About 47 μs
		Multi-speed reference	Speed selection	Four DIs are allocated with functions CMD1, CMD2, CMD3, and CMD4 to provide speed references 1 to 16.
Input/Output signal	Digital input (DI) signal	Supporting signal allocation change		9 DIs (DI8 and DI9 are high-speed DIs.) 37 DI functions: S-ON, alarm reset, gain switchover, main/auxiliary reference switchover, multi-speed reference direction switchover by DI, multi-reference switchover (4 DIs), zero clamp enable, position reference inhibited, positive limit switch, negative limit switch, forward external torque limit, reverse external torque limit, forward jog, reverse jog, step enable, hand wheel multiplying factor signal 1, hand wheel multiplying factor signal 2, hand wheel enable signal, electronic gear ratio selection, torque reference direction, speed reference direction, position reference direction, multi-position reference enable, interrupt positioning cancel signal, home switch, homing enable, interrupt positioning inhibited, braking, position deviation cleared, internal speed limit source, and pulse reference inhibited
	Digital output (DO) signal	Supporting signal allocation change		5 DOs (DO5 is allocated with the PTC function for T025 and models with greater power) 19 DO functions: Servo ready, motor rotation, zero speed signal, speed matching, positioning completed, positioning near, torque limited, speed limited, braking, warning, fault, alarm code (3-bit output), interrupt positioning completed, homing completed, electrical homing completed, torque reached, and speed reached

Item			Description
Built-in functions	Overtravel (OT) prevention		The servo drive stops immediately when P-OT or N-OT becomes active.
	Electronic gear ratio		0.1048576 ⩽ B/A ⩽ 419430.4
	Protection		Protections against overcurrent, overvoltage, undervoltage, overload, main circuit detection error, heatsink overheat, overspeed, encoder error, CPU error, parameter error, and others
	LED display		Main power supply CHARGE indicator, 5-digit LED display
	Analog monitoring function for observation purpose		The servo drive is equipped with an analog monitoring connector for observing speed and torque reference signals.
	Communication function	Connection device	RS232 and RS485 Standard for CAN communication
		Communication protocol	Modbus, CANlink, or CANopen
		1:N communication	When RS485 is used, the maximum value of N is 247.
		Axis address setting	Defined by users
		Function	Status display, user parameter setting, monitored value display, fault tracing display, jog and auto-tuning, and speed/torque reference signal observation
	Others		Gain tuning, alarm record, and jog

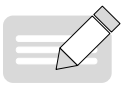

NOTE

◆ [1] Install the servo drive within this ambient temperature range. When the servo drive is installed in an electric cabinet, the temperature inside the cabinet must be within the specified range.

◆ [2] The speed change rate is calculated according to the following formula:

$$\text{Speed change rate} = \frac{\text{No-load speed} - \text{Full-load speed}}{\text{Rated speed}} \times 100\%$$

◆ In actual applications, amplifier deviation is caused by voltage change and temperature change, resulting in change to the calculated resistance. Such changes are reflected by speed change. The speed change rate is expressed by a percentage to the rated speed and includes the values at voltage change and temperature change.

◆ [3] Forward rotation means that the motor rotates clockwise when viewed from the load side.

◆ [4] The built-in open collector power supply is not electrically insulated from the control circuit in the servo drive.

1.2 Servo Motor

1.2.1 Specifications of MS1 Series Servo Motor

1 Designation rules and nameplate

Model: MS1 H1 – 40B 30C B Type: A3 3 1 Z

Mark	Series
MS1	MS1 series servo motor

Mark	Type
H	Max. speed > Rated speed
V	Max. speed = Rated speed

Mark	Type
1	Low inertia, small capacity
2	Low inertia, medium capacity
3	Medium inertia, medium capacity
4	Medium inertia, small capacity

Mark	Rated Power (W)
Comprised of two digits and one letter	
B	x10
C	x100
Example: 40B: 400 W	

Mark	Rated Speed (RPM)
Comprised of two digits and one letter	
B	x10
C	x100
Example: 30C: 3000 RPM	

Mark	Wiring Type
Z	Terminal-type motor
Z-S	Lead-type motor

Mark	Brake, Reducer, and Oil Sealing
0	None
1	Oil sealing
2	Brake
4	Oil sealing + brake

Mark	Shaft Connection Mode
1	Plain shaft*
3	Solid shaft, with key and threaded hole

Mark	Encoder Type
Comprised of one letter and one digit	
A3	Multi-turn absolute encoder
T3	18-bit multi-turn encoder
U2	20-bit single-turn absolute encoder*

Mark	Voltage Class
B	220 V
D	380 V

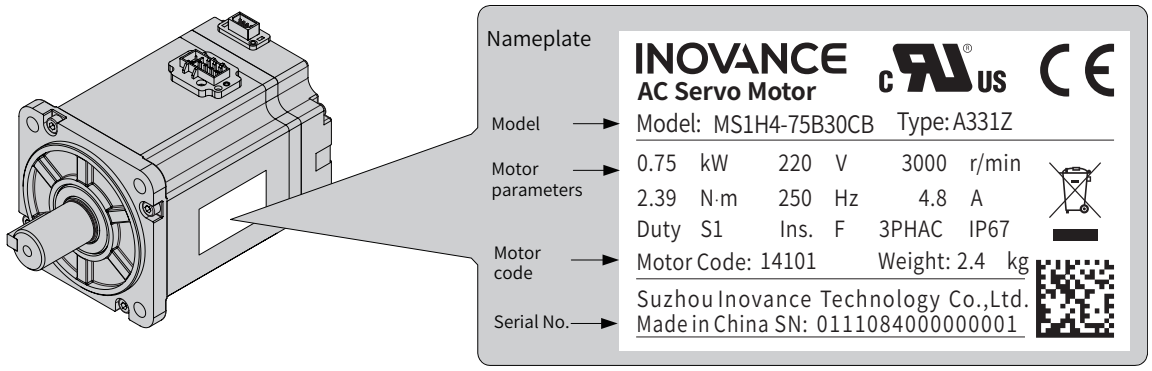

Figure 1-4 Designation rules and nameplate of the servo motor

2 Specifications of the servo motor

1) Motor mechanical characteristics

Item	Description
Rated time	Continuous
Vibration level	V15
Insulation resistance	500 VDC, above 10 MΩ
Ambient temperature	0°C to 40°C
Excitation mode	Permanent magnetic
Installation method	Flange
Thermal class	F
Insulation voltage	1500 VAC, 1 minute (200 V class) 1800 VAC, 1 minute (400 V class)
Enclosure protection mode	IP67 (except shaft extensions and cable ends)
Ambient humidity	20% to 80% (non-condensing)
Continuous mode	Direct connection
Rotation direction	The motor rotates counterclockwise (CCW) when viewed from the load side under the forward rotation command.

2) Motor ratings

Model	Rated Output (kW)[1]	Rated Torque (N·m)	Max. Torque (N·m)	Rated Current (Arms)	Max. Current (Arms)	Rated Speed (RPM)	Max. Speed (RPM)	Torque Parameter (N·m/Arms)	Rotor Moment of Inertia ($kg \cdot cm^2$)	Voltage (V)
MS1H1 (Vn = 3000 RPM, Vmax = 6000 RPM)										
MS1H1-05B30CB	0.05	0.16	0.56	1.3	4.7	3000	6000	0.15	0.026 (0.028)	220
MS1H1-10B30CB	0.1	0.32	1.12	1.3	4.7			0.26	0.041 (0.043)	
MS1H1-20B30CB	0.2	0.64	2.24	1.5	5.8			0.46	0.207 (0.220)	
MS1H1-40B30CB	0.4	1.27	4.46	2.8	10.1			0.53	0.376 (0.390)	
MS1H1-55B30CB	0.55	1.75	6.13	3.8	15.0			0.49	1.06	
MS1H1-75B30CB	0.75	2.39	8.36	4.8	16.9			0.58	1.38 (1.43)	
MS1H1-10C30CB	1.0	3.18	11.1	7.6	28.0			0.46	1.75	
MS1H2 (Vn = 3000 RPM, Vmax = 6000/5000 RPM)										
MS1H2-10C30CB	1.0	3.18	9.54	7.5	23.00	3000	6000	0.47	1.87 (3.12)	220
MS1H2-15C30CB	1.5	4.90	14.7	10.8	32.00		5000	0.54	2.46 (3.71)	

Model	Rated Output (kW)[1]	Rated Torque (N·m)	Max. Torque (N·m)	Rated Current (Arms)	Max. Current (Arms)	Rated Speed (RPM)	Max. Speed (RPM)	Torque Parameter (N·m/Arms)	Rotor Moment of Inertia (kg·cm²)	Voltage (V)
MS1H2-10C30CD	1.0	3.18	9.54	3.65	11.00	3000	6000	0.89	1.87 (3.12)	380
MS1H2-15C30CD	1.5	4.90	14.7	4.50	14.00		5000	1.07	2.46 (3.71)	
MS1H2-20C30CD	2.0	6.36	19.1	5.89	20.00		5000	1.19	3.06 (4.31)	380
MS1H2-25C30CD	2.5	7.96	23.9	7.56	25.00			1.2	3.65 (4.90)	
MS1H2-30C30CD	3.0	9.8	29.4	10.00	30.00			1.2	7.72 (10.22)	
MS1H2-40C30CD	4.0	12.6	37.8	13.60	40.80			1.12	12.1 (14.6)	
MS1H2-50C30CD	5.0	15.8	47.6	16.00	48.00			1.29	15.4 (17.9)	
MS1H3 (Vn = 1500 RPM, Vmax = 3000 RPM)										
MS1H3-85B15CB	0.85	5.39	13.5	6.60	16.50	1500	3000	0.95	13.3 (14)	220
MS1H3-13C15CB	1.3	8.34	20.85	10.00	25.00			0.96	17.8 (18.5)	
MS1H3-85B15CD	0.85	5.39	13.5	3.30	8.25	1500	3000	1.87	13.3 (14)	380
MS1H3-13C15CD	1.3	8.34	20.85	5.00	12.50			1.87	17.8 (18.5)	
MS1H3-18C15CD	1.8	11.5	28.75	6.60	16.50			1.87	25 (25.7)	380
MS1H3-29C15CD	2.9	18.6	37.2	11.90	23.80			1.82	55 (57.2)	
MS1H3-44C15CD	4.4	28.4	71.1	16.50	40.50			1.90	88.9 (90.8)	
MS1H3-55C15CD	5.5	35.0	87.6	20.85	52.00			1.74	107 (109.5)	
MS1H3-75C15CD	7.5	48.0	119	25.70	65.00			1.99	141 (143.1)	
MS1H4 (Vn = 3000 RPM, Vmax = 6000 RPM)										
MS1H4-40B30CB	0.4	1.27	4.46	2.80	10.10	3000	6000	0.53	0.657 (0.667)	220
MS1H4-75B30CB	0.75	2.39	8.36	4.80	16.9			0.58	2 (2.012)	

NOTE

◆ [1] The motor with oil sealing must be derated by 10% during use.
◆ [2] Values inside parentheses "()" are for the motor with brake.
◆ [3] (-S4) indicates the model with brake is S4 duty.
◆ All the parameters and torque-speed characteristic values in the preceding table are based on the conditions that the motor works with an Inovance servo drive and the armature coil temperature is 20°C.
◆ All the characteristic parameters in the preceding table are based on the conditions that the motors are provided with the following heatsinks:
MS1H1/MS1H4: 250 x 250 x 6 mm (aluminum)
MS1H2-10C to 25C: 300 x 300 x 12 mm (aluminum)
MS1H2-30C to 50C: 400 x 400 x 20 mm (aluminum)
MS1H3-85B to 18C: 400 x 400 x 20 mm (iron)
MS1H3-29C to 75C: 360 x 360 x 25 mm (double-layer aluminum plate)

3 Motor overload characteristics

Load Ratio (%)	Running Time (s)	Load Ratio (%)	Running Time (s)
120	230	200	10
130	80	210	8.5
140	40	220	7
150	30	230	6
160	20	240	5.5
170	17	250	5
180	15	300	3
190	12	350	2

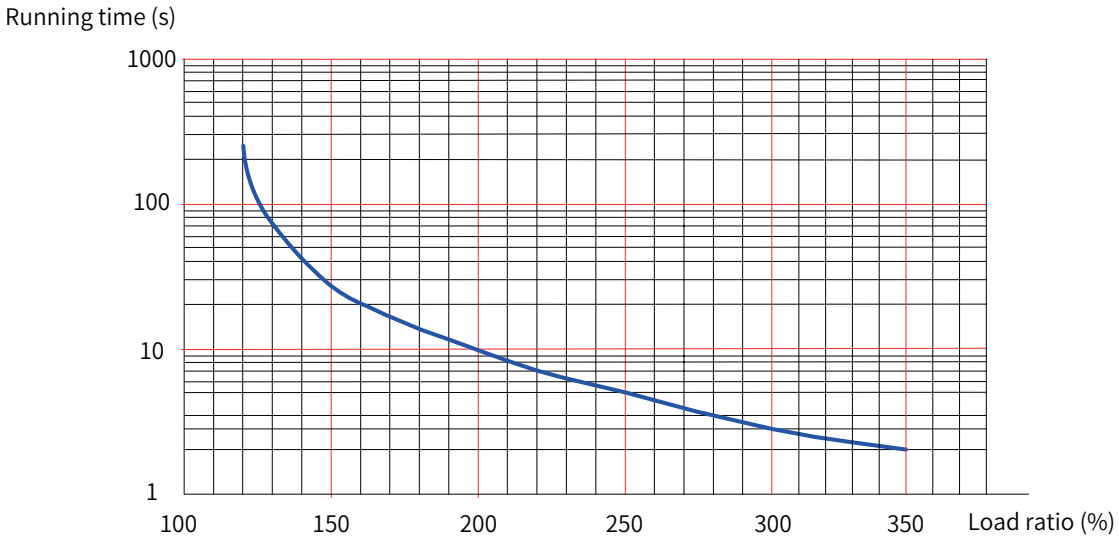

Figure 1-5 Motor overload curve

NOTE

◆ The maximum torque of the H1 and H4 models is 3.5 times their rated torque.
◆ The maximum torque of the H2 model is 3 times its rated torque.
◆ The maximum torque of the H3 model (excluding the 2.9 kW class) is 2.5 times its rated torque.
◆ The maximum torque of the 2.9 kW class is 2 times its rated torque.

4 Motor radial and axial loads

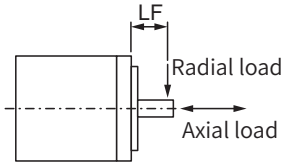

Figure 1-6 Motor radial and axial load diagram

Table 1-1 Motor radial and axial load parameters

Motor Model	Base Size (mm)	LF (mm)	Allowable Radial Load (N)	Allowable Axial Load (N)
MS1H1-05B30CB	40	20	78	54
MS1H1-10B30CB	40	20	78	54
MS1H1-20B30CB	60	25	245	74
MS1H1-40B30CB	60	25	245	74
MS1H1-55B30CB	80	35	392	147
MS1H1-75B30CB	80	35	392	147
MS1H1-10C30CB	80	35	392	147
MS1H2-10C30CB	100	45	686	196
MS1H2-10C30CD	100	45	686	196
MS1H2-15C30CB	100	45	686	196
MS1H2-15C30CD	100	45	686	196
MS1H2-20C30CD	100	45	686	196
MS1H2-25C30CD	100	45	686	196
MS1H2-30C30CD	130	63	980	392
MS1H2-40C30CD	130	63	1176	392
MS1H2-50C30CD	130	63	1176	392
MS1H3-85B15CB	130	45	686	196
MS1H3-13C15CB	130	45	686	196
MS1H3-85B15CD	130	45	686	196
MS1H3-13C15CD	130	45	686	196
MS1H3-18C15CD	130	45	686	196
MS1H3-29C15CD	180	79	1470	490
MS1H3-44C15CD	180	79	1470	490
MS1H3-55C15CD	180	113	1764	588
MS1H3-75C15CD	180	113	1764	588
MS1H4-40B30CB	60	25	245	74
MS1H4-75B30CB	80	35	392	147

5 Specifications of the brake

Motor Model	Holding Torque (N·m)	Supply Voltage (V_{DC}) ±10%	Rated Power (W)	Coil Resistance (Ω) (±7%)	Exciting Current (A)	Close Time (ms)	Release Time (ms)	Backlash (°)
MS1H1-05B/10B	0.32	24	6.1	94.4	0.25	⩽ 40	⩽ 20	⩽ 1.5
MS1H1-20B/40B MS1H4-40B	1.5		7.6	75.79	0.32	⩽ 60	⩽ 20	⩽ 1.5
MS1H1/H4-75B	3.2		10	57.6	0.42	⩽ 60	⩽ 40	⩽ 1.0
MS1H3-85B/13C/18C	12		19.4	29.7	0.81	⩽ 120	⩽ 60	⩽ 0.5
MS1H2-10C/15C/20C/25C	8		23	25	0.96	⩽ 85	⩽ 30	⩽ 0.5
MS1H2-30C/40C/50C	16		27	21.3	1.13	⩽ 100	⩽ 60	⩽ 0.5
MS1H3-29C/44C/55C/75C	50		40	14.4	1.67	⩽ 200	⩽ 100	⩽ 0.5

Do not share the power supply of the brake with other electrical devices. Failure to comply may result in malfunction of the brake due to voltage or current drop caused by other devices.

Use cables with a cross-sectional area above 0.5 mm^2.

6 Torque-speed characteristics

■ MS1H1 (low inertia, small capacity)

Continuous operating area

Short-time operating area

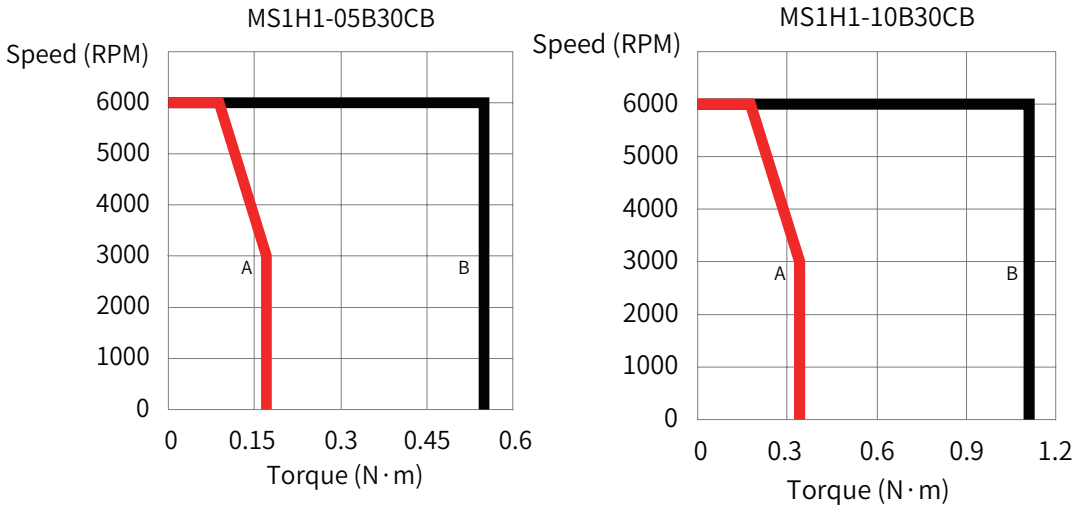

MS1H1-20B30CB

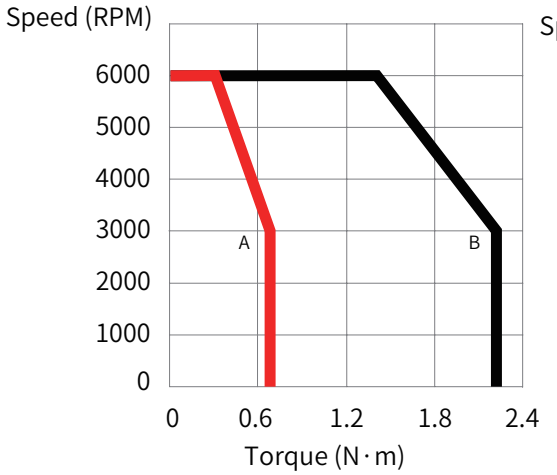

MS1H1-40B30CB

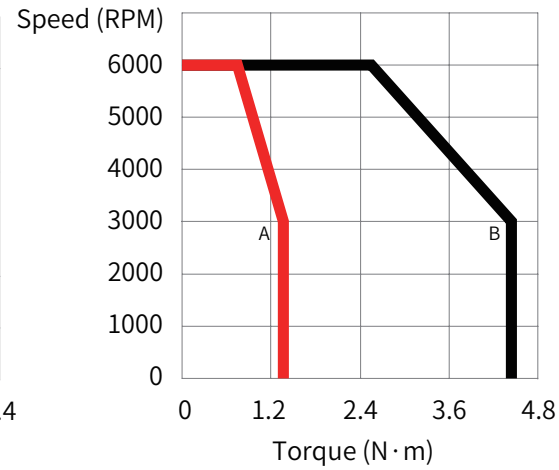

MS1H1-55B30CB

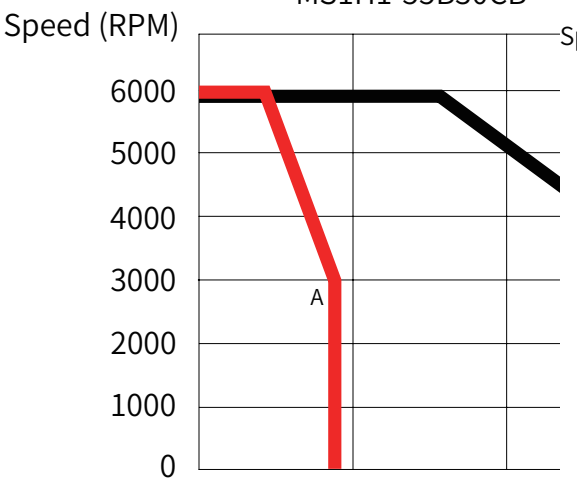

MS1H1-75B30CB

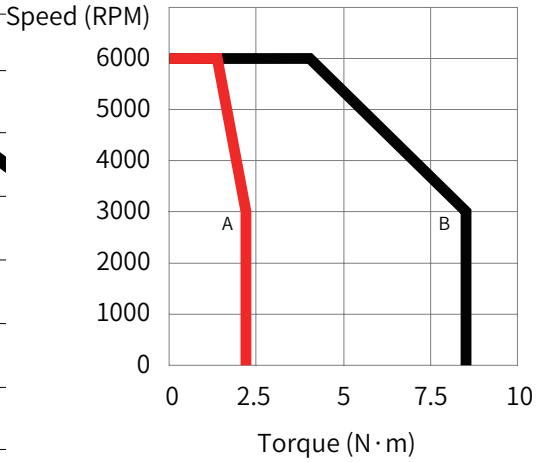

MS1H1-10C30CB

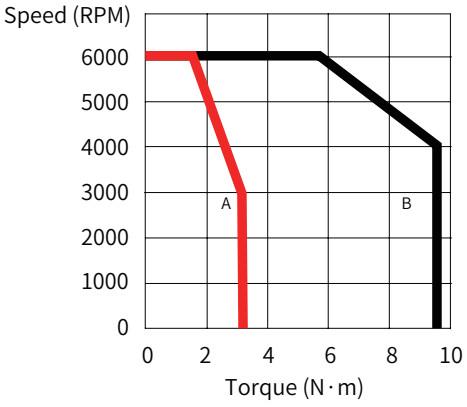

■ MS1H2 (low inertia, medium capacity)

Continuous operating area

Short-time operating area

MS1H2-10C30C*

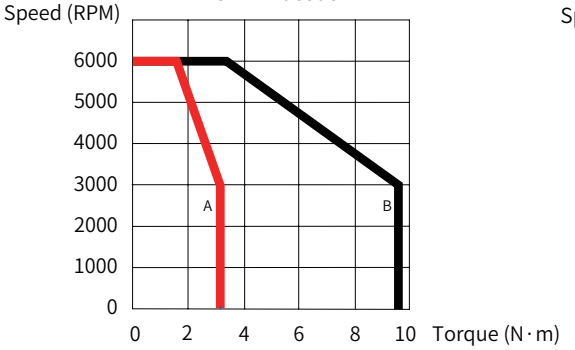

MS1H2-15C30C*

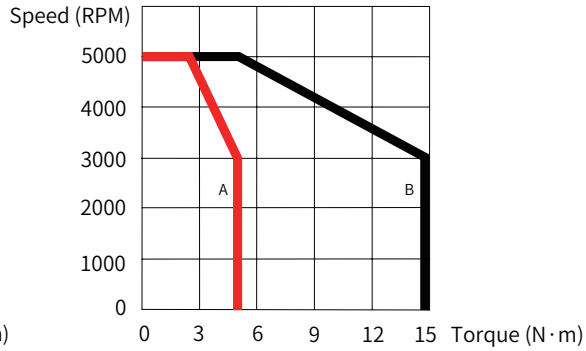

MS1H2-20C30CD-A331Z

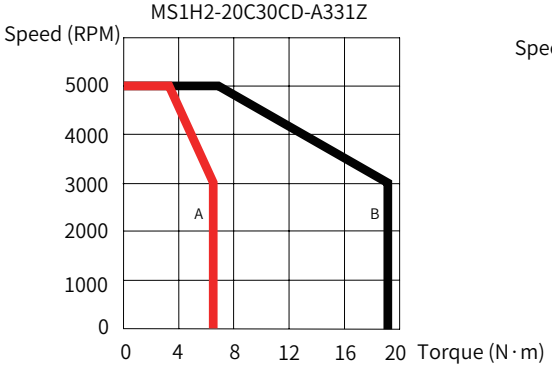

MS1H2-20C30CD-A334Z-S4

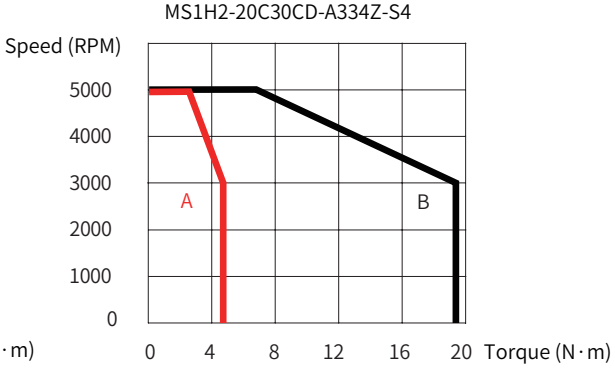

MS1H2-25C30CD-A331Z

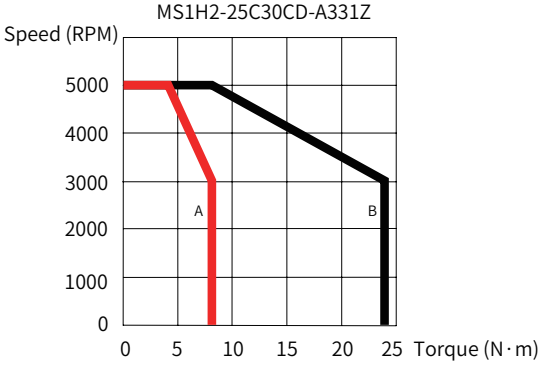

MS1H2-25C30CD-A334Z-S4

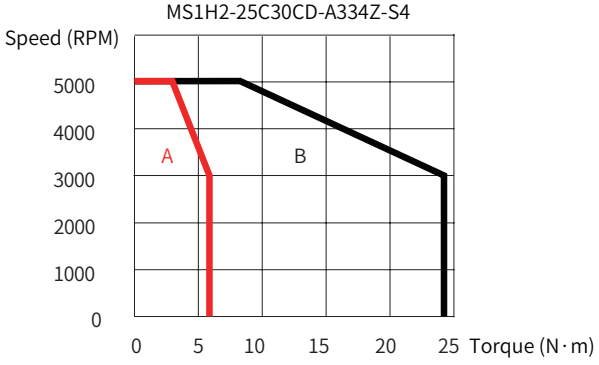

MS1H2-40C30CD-A331Z

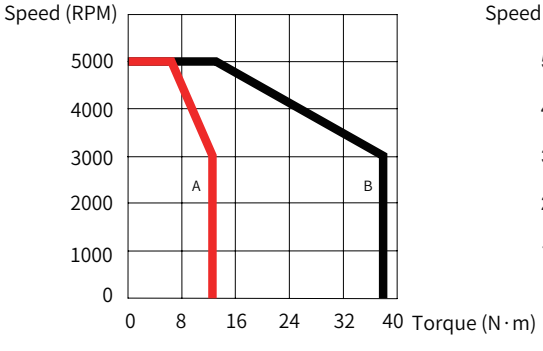

MS1H2-40C30CD-A334Z-S4

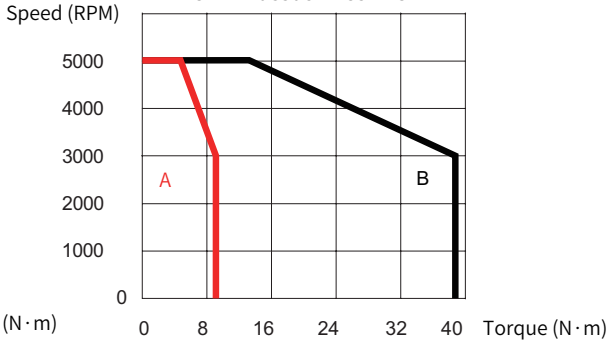

MS1H2-50C30CD-A331Z

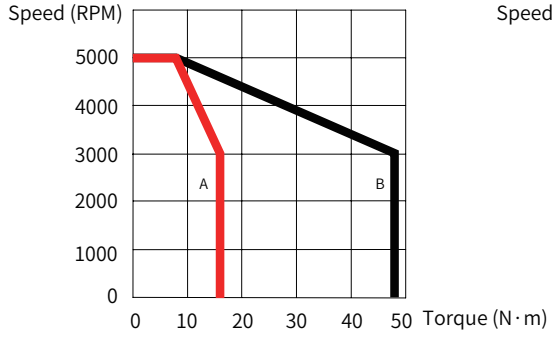

MS1H2-50C30CD-A331Z-S4

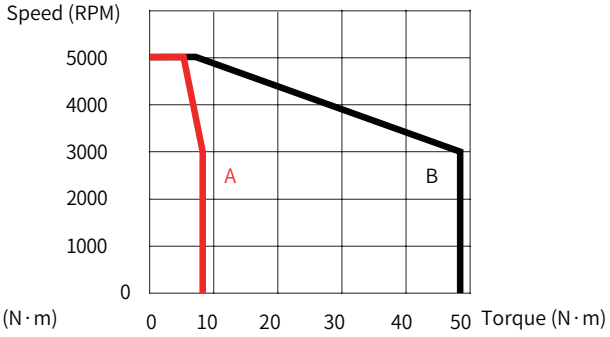

■ MS1H3 (medium inertia, medium capacity)

Continuous operating area

Short-time operating area

MS1H3-85B15C*

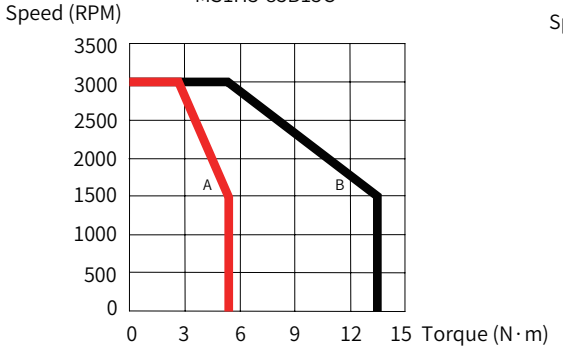

MS1H3-13C15C*

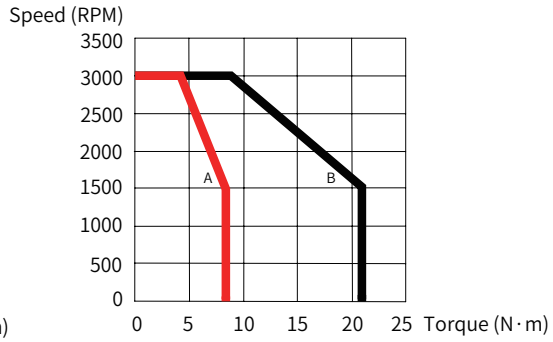

MS1H3-18C15CD

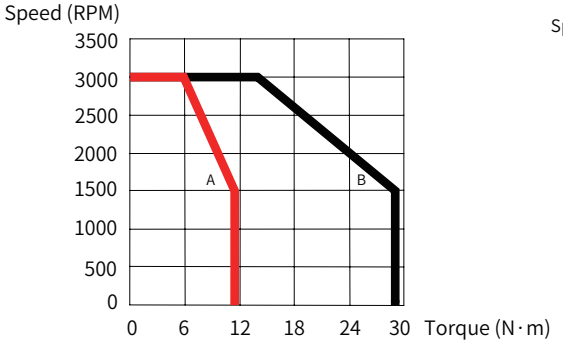

MS1H3-29C15CD

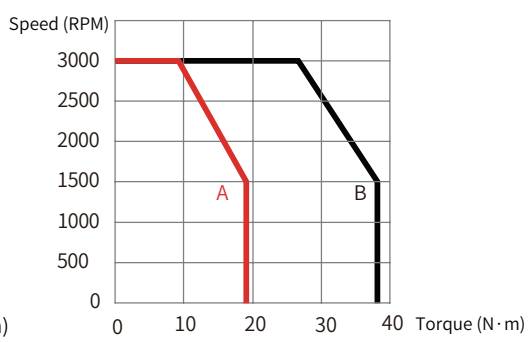

MS1H3-44C15CD

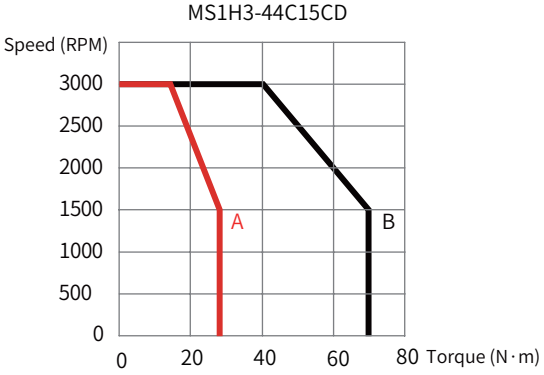

MS1H3-55C15CD

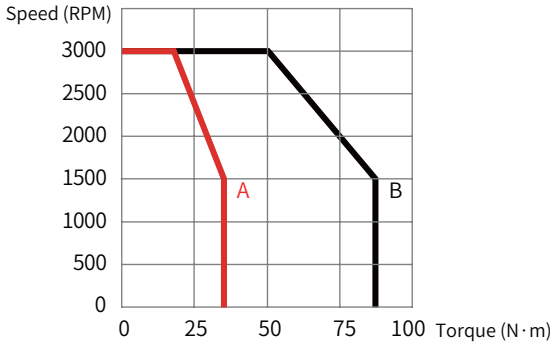

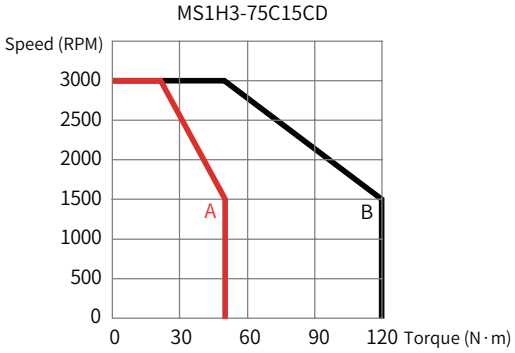

■ MS1H4 (medium inertia, small capacity)

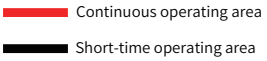

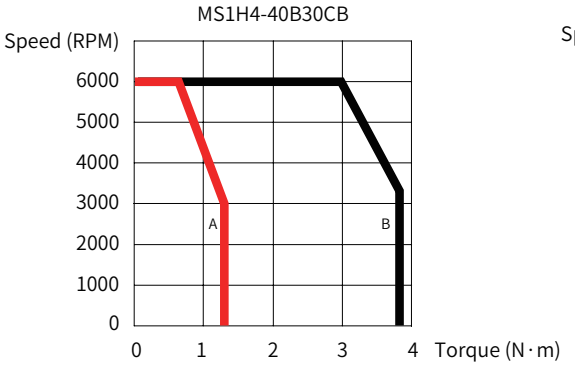

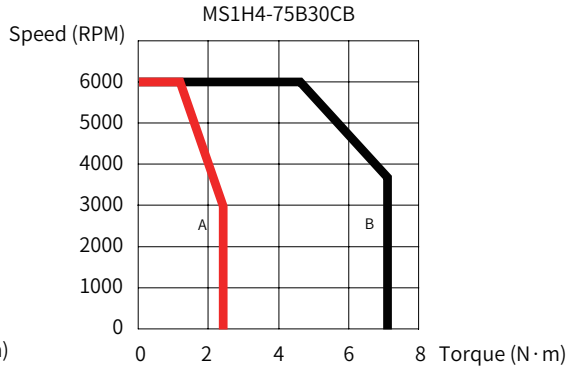

7 Derating characteristics

■ Altitude-based derating curve

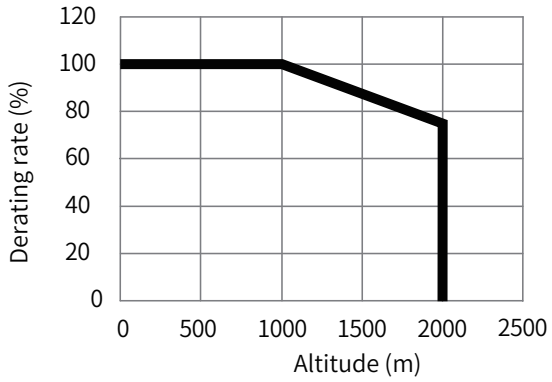

■ Temperature-based derating curve

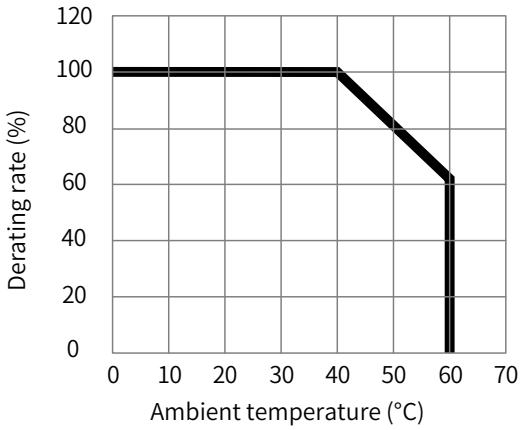

1.2.2 Specifications of ISMG Series Servo Motor

1 Designation rules and nameplate

ISM G 1- 30D 15C D – A3 3 1 F A

Mark	Series
ISM	IS series servo motor

Mark	Frame
G	1: 200 x 200 frame
	2: 266 x 266 frame

Mark	Rated Power (W) in S4 Duty
Comprised of two digits and one letter	
C	x 100
D	x 1000
E	x 10000
Example: 30D: 30000 W	

Mark	Rated Speed (RPM)
Comprised of two digits and one letter	
B	x 10
C	x 100
Example: 15C: 1500 RPM	

Mark	Product Code
A	Second generation product

Mark	Customized Feature
X	Natural cooling
F	Forced air cooling

Mark	Brake, Reducer, and Oil Sealing
1	Oil sealing
4	Brake (ISMG 2 series model without brake)

Mark	Shaft Connection Mode
1	Plain shaft
3	Solid shaft, with key and threaded hole
A	Solid shaft, with embedded rotor, key, and threaded hole

Mark	Encoder Type
Comprised of one letter and one digit	
A3	23-bit multi-turn absolute encoder

Mark	Voltage Class
D	380 V

Note: The standard motor model is -A331*. Other models need to be booked in advance.

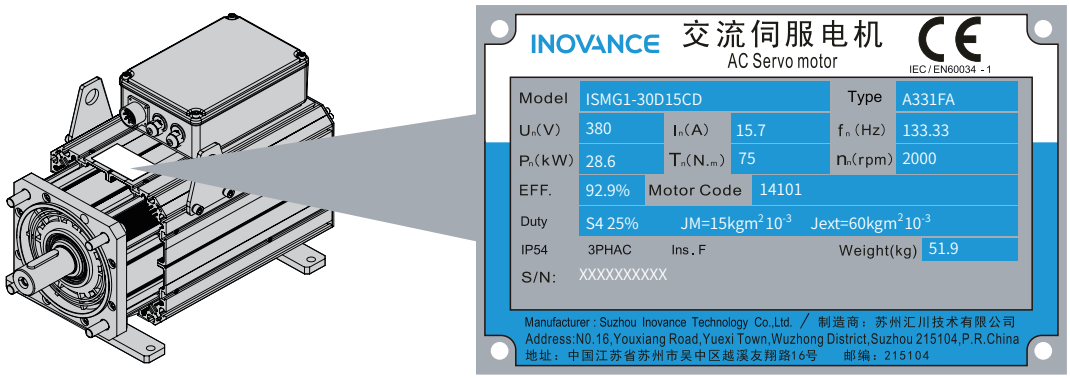

Figure 1-7 Designation rules and nameplate of the servo motor

2 Specifications of the servo motor

Table 1-2 Specifications of the servo motor

Motor Model	Power (kW)	Voltage (V)	Current (A)	Speed (RPM)	Frequency (Hz)	Torque (N·m)	D-axis Phase Inductance (mH)	Q-axis Phase Inductance (mH)
ISMG1-95C15CD-A331FA	7.9	380	14.5	1500	100	50	5.34	5.34
ISMG1-12D20CD-A331FA	10.5	380	20.3	2000	133.33	50	2.73	2.73
ISMG1-14D15CD-A331FA	11.8	380	22.9	1500	100	75	3.49	3.49
ISMG1-18D20CD-A331FA	15.7	380	28.6	2000	133.33	75	2.24	2.24
ISMG1-17D15CD-A331FA	14.5	380	28.1	1500	100	92	2.73	2.73
ISMG1-23D20CD-A331FA	19.3	380	37.4	2000	133.33	92	1.53	1.53
ISMG1-22D15CD-A331FA	18.1	380	33.4	1500	100	115	2.46	2.46
ISMG1-28D20CD-A331FA	24.1	380	46.7	2000	133.33	115	1.26	1.26
ISMG1-30D15CD-A331FA	23.6	380	45.9	1500	100	150	1.64	1.64
ISMG1-41D20CD-A331FA	31.4	380	57.3	2000	133.33	150	1.05	1.05
ISMG2-31D15CD-A331FA	26.7	380	49.4	1500	100	170	2.22	2.22
ISMG2-42D20CD-A331FA	35.6	380	69.1	2000	133.33	170	1.13	1.13
ISMG2-42D15CD-A331FA	36.1	380	70.3	1500	100	230	1.46	1.46
ISMG2-57D20CD-A331FA	48.2	380	87.8	2000	133.33	230	0.93	0.93
ISMG2-52D15CD-A331FA	44.8	380	87.2	1500	100	285	1.14	1.14
ISMG2-70D20CD-A331FA	59.7	380	115.9	2000	133.33	285	0.64	0.64
ISMG2-60D15CD-A331FA	53.4	380	98.8	1500	100	340	1.03	1.03
ISMG2-80D20CD-A331FA	71.2	380	138.2	2000	133.33	340	0.53	0.53
ISMG2-80D15CD-A331FA	69.1	380	134.6	1500	100	440	0.69	0.69
Motor Model	Phase Resistance (mΩ)	Torque Coefficient (N·m/A)	Back EMF at Rated Speed (V)	Peak Speed (RPM)	Peak Torque (N·m)	Peak Current (A)	Inertia ($kg.cm^2$)	Weight (kg)
ISMG1-95C15CD-A331FA	480	3.44	311.9	1830	135	43.2	75	45.2
ISMG1-12D20CD-A331FA	240	2.46	297	2560	135	60.4	75	45.2
ISMG1-14D15CD-A331FA	282.8	3.27	297	1920	203	68.3	90	51.9
ISMG1-18D20CD-A331FA	174	2.62	316.8	2400	203	85.2	90	51.9
ISMG1-17D15CD-A331FA	200.4	3.27	297	1920	248	83.4	105	59
ISMG1-23D20CD-A331FA	114.9	2.46	297	2560	248	110.9	105	59
ISMG1-22D15CD-A331FA	171.9	3.44	311.9	1830	311	99.4	120	66
ISMG1-28D20CD-A331FA	87.7	2.46	297	2560	311	139.1	120	66
ISMG1-30D15CD-A331FA	108.1	3.27	297	1920	405	136.2	150	79.8
ISMG1-41D20CD-A331FA	69.8	2.62	316.8	2400	405	170	150	79.8
ISMG2-31D15CD-A331FA	70.7	3.44	311.9	1830	366	117	296	122
ISMG2-42D20CD-A331FA	36.2	2.46	297	2560	366	163.7	296	122
ISMG2-42D15CD-A331FA	42.4	3.27	297	1920	495	166.5	368	141.3
ISMG2-57D20CD-A331FA	26.9	2.62	316.8	2400	495	207.8	368	141.3
ISMG2-52D15CD-A331FA	30.9	3.27	297	1920	613	206.2	434	158.4
ISMG2-70D20CD-A331FA	17.4	2.46	297	2560	613	274.1	434	158.4
ISMG2-60D15CD-A331FA	30.4	3.44	311.9	1830	731	233.8	500	175.4
ISMG2-80D20CD-A331FA	16.4	2.46	297	2560	731	326.9	500	175.4
ISMG2-80D15CD-A331FA	20.1	3.27	297	1920	946	318.2	640	217

NOTE

◆ In the table above, motor models are named in the S4 duty mode, whereas parameters such as power, current, and torque are those in the S1 duty mode.

◆ For specifications of other motor models, please contact Inovance sales personnel.

3 Specifications of motors with brake

When determining the length of the motor brake cable, take into full account the voltage drop caused by cable resistance. The input voltage must be at least 21.6 V to enable the brake to work properly.

The following table lists the brake specifications of Inovance ISMG motors.

Table 1-3 Brake specifications

Motor Model	Holding Torque (N·m)	Supply Voltage (V)±10%	Resistance 20°C, (Ω)±5%	Supply Current Range 20°C, (A)±10%	Release Time (ms)	Close Time (ms)	Backlash (mm)
ISMG1-95C15CD	150	24 DC	8.2	2.9	301	225	0.3 to 0.5
ISMG1-14D15CD							
ISMG1-17D15CD							
ISMG1-22D15CD							
ISMG1-30D15CD							

4 Safe operating area of motors

A Continuous operating area

B Short-time operating area

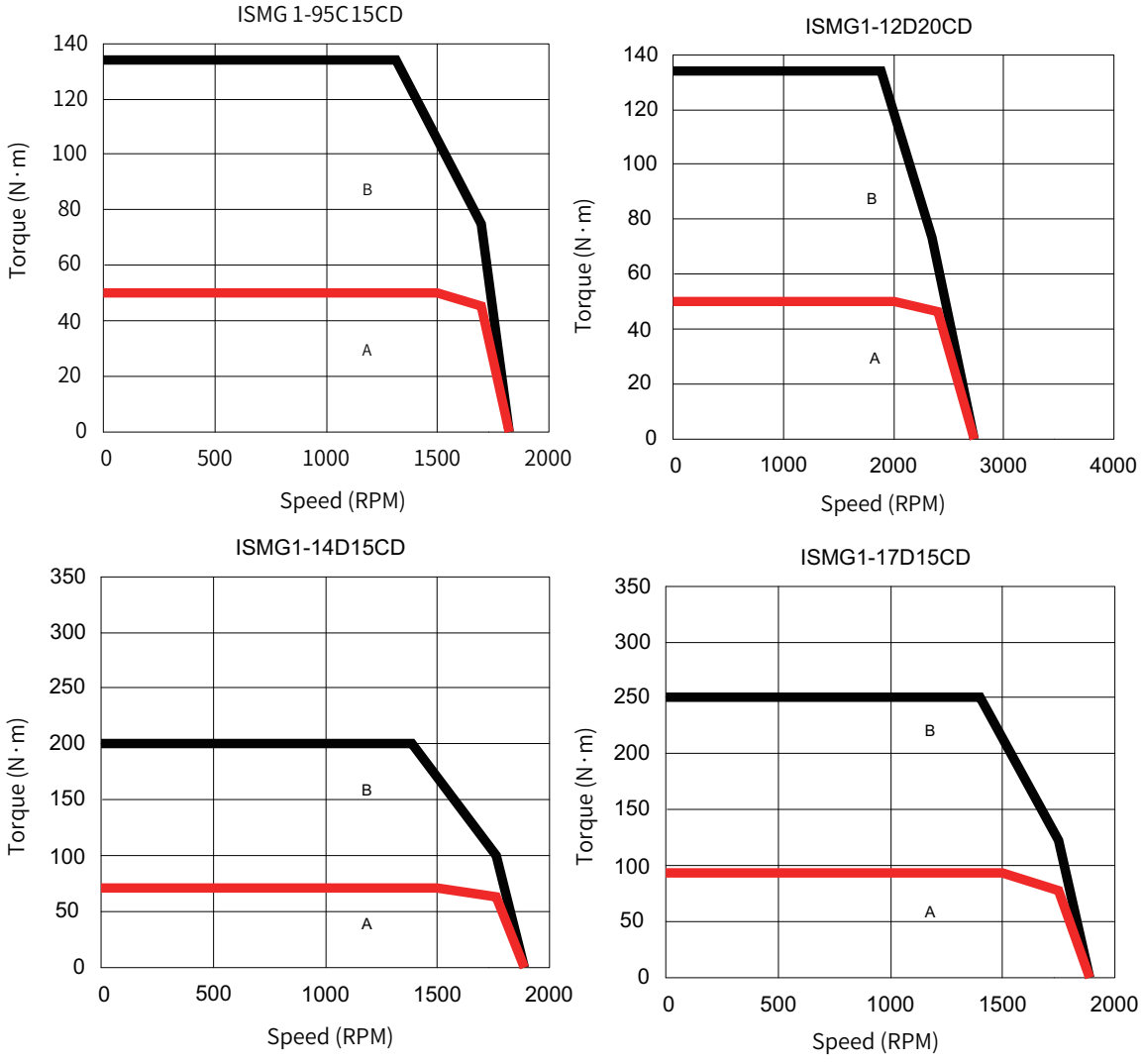

ISMG1-18D20CD

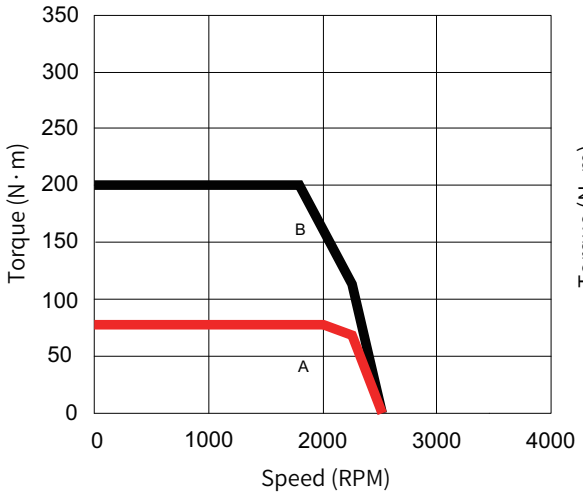

ISMG1-22D15CD

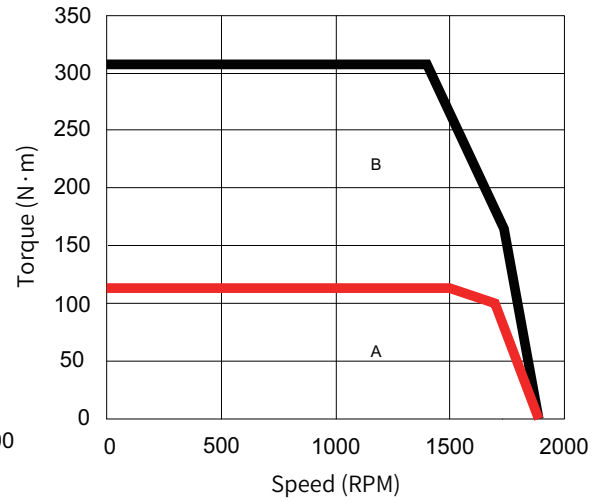

ISMG1-23D20CD

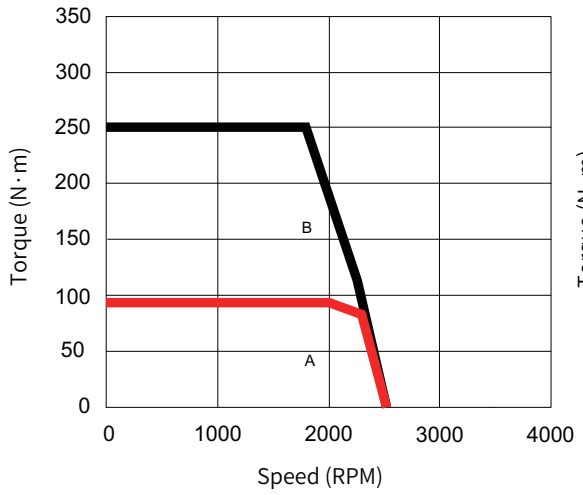

ISMG1-28D20CD

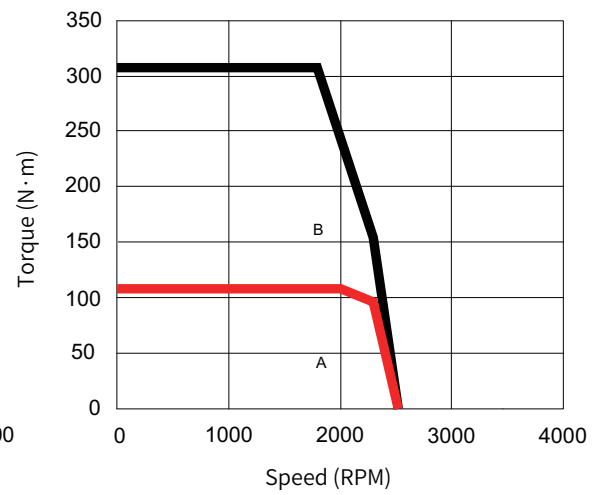

ISMG1-30D15CD

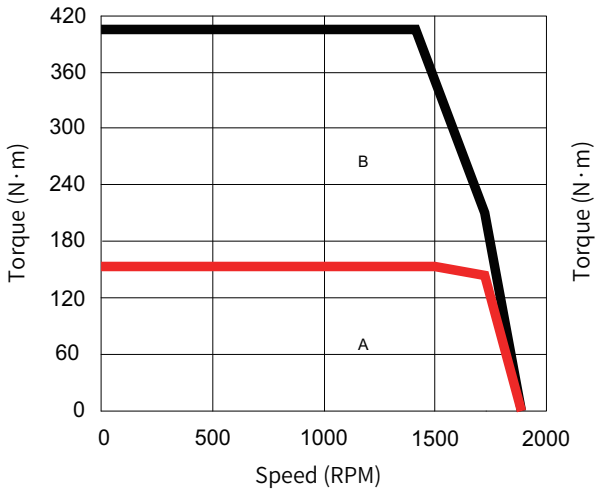

ISMG1-41D20CD

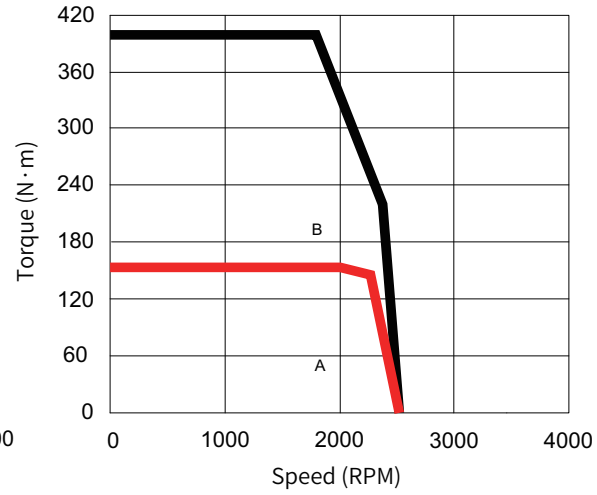

ISMG2-31D15CD

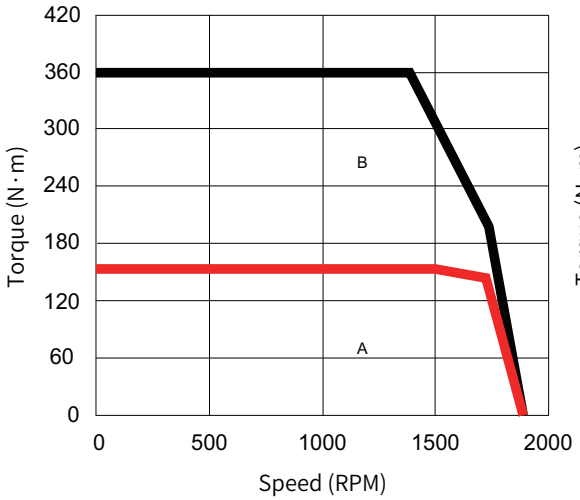

ISMG2-42D20CD

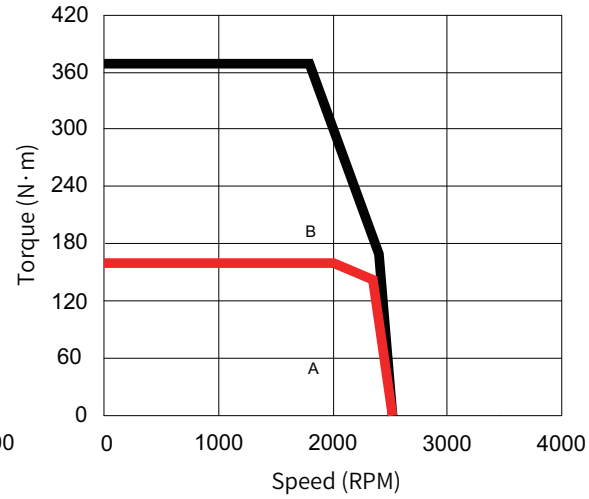

ISMG2-42D15CD

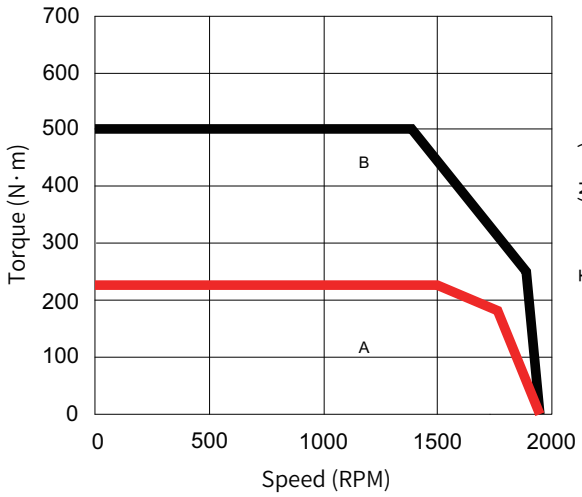

ISMG2-52D15CD

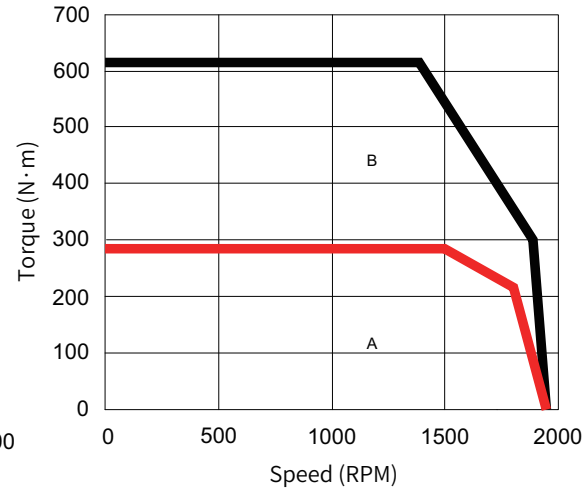

ISMG2-57D20CD

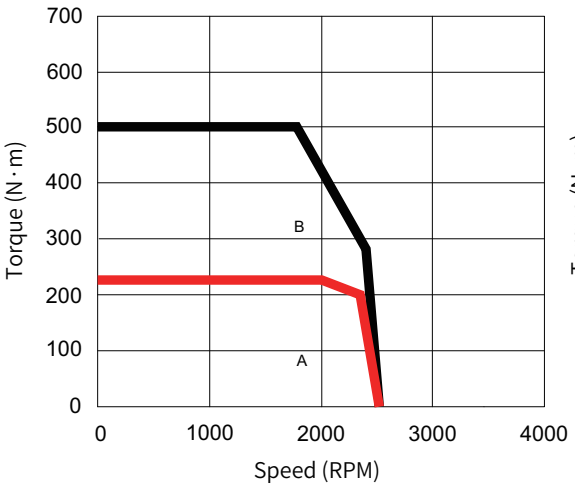

ISMG2-60D15CD

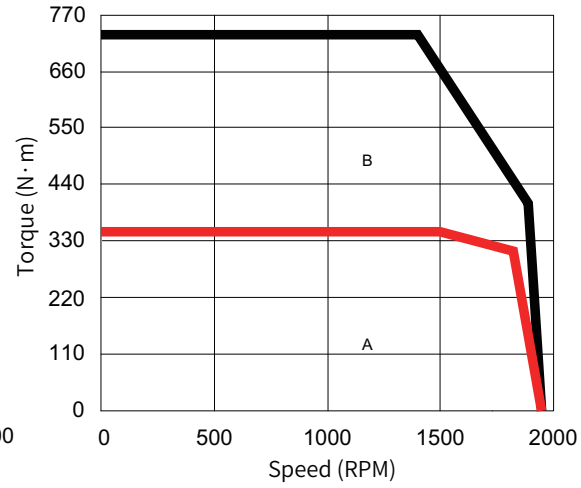

ISMG2-70D20CD

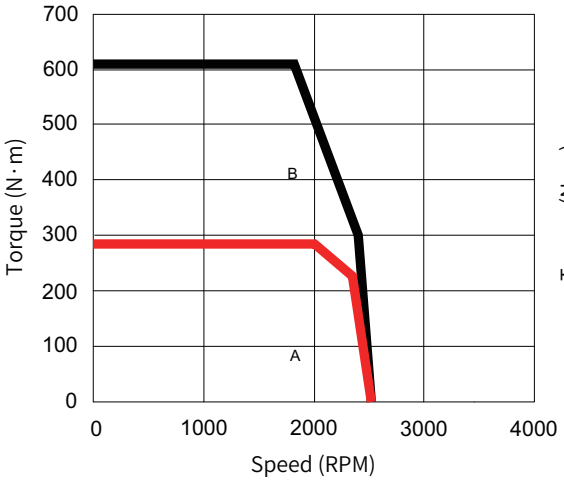

ISMG2-80D20CD

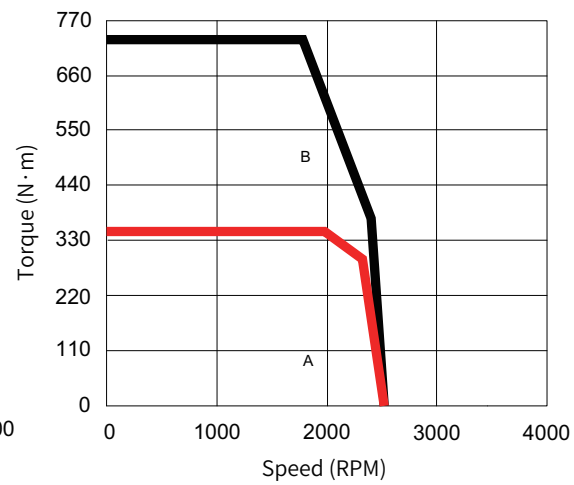

ISMG2-80D15CD

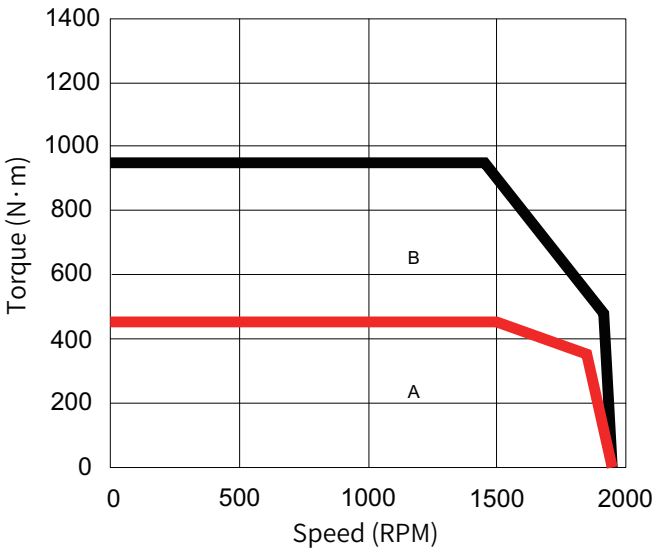

1.3 System Specifications

Rated Speed (RPM)	Max. Speed (RPM)	Capacity (kW)	Servo Motor Model	Motor Flange Size	Servo Drive Model	Drive Size	Drive SN (H01-02)
3000	6000	0.05	MS1H1-05B30CB-****Z	40	IS810P-50M4T005	1	30004
		0.1	MS1H1-10B30CB-****Z				
		0.2	MS1H1-20B30CB-****Z	60			
		0.4	MS1H1-40B30CB-****Z				
		0.55	MS1H1-55B30CB-**** Z	80			
		0.75	MS1H1-75B30CB-****Z				
		1.0	MS1H1-10C30CB-****Z		IS810P-50M4T009		30005
		1.0	MS1H2-10C30CD-****Z		IS810P-50M4T005		
3000	5000	1.5	MS1H2-15C30CD-****Z	100			
		2.0	MS1H2-20C30CD-****Z		IS810P-50M4T009		
		2.5	MS1H2-25C30CD-****Z				
		3.0	MS1H2-30C30CD-****Z	130	IS810P-50M4T013		30006
		4.0	MS1H2-40C30CD-****Z		IS810P-50M4T017	2	30007
		5.0	MS1H2-50C30CD-****Z				
1500	3000	0.85	MS1H3-85B15CD-****Z		IS810P-50M4T005	1	30004
		1.3	MS1H3-13C15CD-****Z				
		1.8	MS1H3-18C15CD-****Z		IS810P-50M4T009		30005
		2.9	MS1H3-29C15CD-****Z	180	IS810P-50M4T013		30006
		4.4	MS1H3-44C15CD-****Z		IS810P-50M4T017	2	30007
		5.5	MS1H3-55C15CD-****Z		IS810P-50M4T025		30008
		7.5	MS1H3-75C15CD-****Z				
3000	6000	0.4	MS1H4-40B30CB-****Z	60	IS810P-50M4T005	1	30004
		0.75	MS1H4-75B30CB-****Z				
1500	1830	7.9	ISMG1-95C15CD-A331FA	200	IS810P-50M4T017	2	30007
2000	2560	10.5	ISMG1-12D20CD-A331FA		IS810P-50M4T025		30008
1500	1920	11.8	ISMG1-14D15CD-A331FA				
		14.5	ISMG1-17D15CD-A331FA		IS810P-50M4T032		30009
2000	2400	15.7	ISMG1-18D20CD-A331FA				
1500	1830	18.1	ISMG1-22D15CD-A331FA		IS810P-50M4T037		30010
2000	2560	19.3	ISMG1-23D20CD-A331FA				
		24.1	ISMG1-28D20CD-A331FA		IS810P-50M4T075		30013
1500	1920	23.6	ISMG1-30D15CD-A331FA				
2000	2400	31.4	ISMG1-41D20CD-A331FA				
1500	1830	26.7	ISMG2-31D15CD-A331FA				
2000	2560	35.6	ISMG2-42D20CD-A331FA	266			
1500	1920	36.1	ISMG2-42D15CD-A331FA				
		44.8	ISMG2-52D15CD-A331FA		IS810P-50M4T091	3	30016
2000	2400	48.2	ISMG2-57D20CD-A331FA				
1500	1830	53.4	ISMG2-60D15CD-A331FA		IS810P-50M4T112		
2000	2560	59.7	ISMG2-70D20CD-A331FA				
		71.2	ISMG2-80D20CD-A331FA		IS810P-50M4T150		
1500	1920	69.1	ISMG2-80D15CD-A331FA				

1.4 Cables

1.4.1 Cables for MS1 Series Motor (Including Communication Cable)

Table 1-4 Selection of front outlet cables for the MS1H1 or MS1H4 terminal-type (Z) motor

Cable Type	Cable Length (m)		
	3.0	5.0	10.0
Power cable (without brake)	S6-L-M107-3.0	S6-L-M107-5.0	S6-L-M107-10.0
Power cable (with brake)	S6-L-B107-3.0	S6-L-B107-5.0	S6-L-B107-10.0
Absolute encoder cable	S6-L-P024-3.0	S6-L-P024-5.0	S6-L-P024-10.0
Incremental encoder cable	S6-L-P014-3.0	S6-L-P014-5.0	S6-L-P014-10.0

Table 1-5 Selection of rear outlet cables for the MS1H1 or MS1H4 terminal-type (Z) motor

Cable Type	Cable Length (m)		
	3.0	5.0	10.0
Power cable (without brake)	S6-L-M108-3.0	S6-L-M108-5.0	S6-L-M108-10.0
Power cable (with brake)	S6-L-B108-3.0	S6-L-B108-5.0	S6-L-B108-10.0
Absolute encoder cable	S6-L-P025-3.0	S6-L-P025-5.0	S6-L-P025-10.0
Incremental encoder cable	S6-L-P015-3.0	S6-L-P015-5.0	S6-L-P015-10.0

Table 1-6 Selection of cables for the lead-type (Z-S) motors

Cable Type	Cable Length (m)		
	3.0	5.0	10.0
Power cable (without brake)	S6-L-M100-3.0	S6-L-M100-5.0	S6-L-M100-10.0
Power cable (with brake)	S6-L-B100-3.0	S6-L-B100-5.0	S6-L-B100-10.0
Absolute encoder cable	S6-L-P020-3.0	S6-L-P020-5.0	S6-L-P020-10.0
Incremental encoder cable	S6-L-P010-3.0	S6-L-P010-5.0	S6-L-P010-10.0

NOTE

◆ The cables listed in the preceding table are also available in drag chain specifications. Cables used in moving parts, such as manipulators, have letter "-T" suffixed to their model codes. Specify the drag chain specifications when placing orders to suppliers, and use flexible cables applicable to the drag chain.

◆ Terminal-type motor encoder cables shorter than 25 m do not need adapter cables. In this case, use 1Px22AWG+2Px26AWG if the cable length is 10 m to 25 m, or use 3Px26AWG if the cable is shorter than 10 m.

◆ For terminal-type motor encoder cables longer than 25 m, additionally order the S6-C24 cable kit. For the specific cable length, contact Inovance sales personnel.

◆ For lead-type motor encoder cables, use 1Px22AWG+2Px26AWG if the cable length is 10 m to 25 m, or use 3Px26AWG if the cable is shorter than 10 m.

◆ For lead-type motor encoder cables longer than 25 m, contact Inovance sales personnel.

Table 1-7 Selection of cables for the MS1H2 or MS1H3 motor

Cable Type	Cable Length (m)		
	3.0	5.0	10.0
Power cable (without brake)	S6-L-M111-3.0	S6-L-M111-5.0	S6-L-M111-10.0
Power cable (with brake)	S6-L-B111-3.0	S6-L-B111-5.0	S6-L-B111-10.0
Absolute encoder cable	S6-L-P021-3.0	S6-L-P021-5.0	S6-L-P021-10.0
Incremental encoder cable	S6-L-P011-3.0	S6-L-P011-5.0	S6-L-P011-10.0

Table 1-8 Selection of cables for the MS1H3 motor (2.9 kW)

Cable Type	Cable Length (m)		
	3.0	5.0	10.0
Power cable (without brake)	S6-L-M112-3.0	S6-L-M112-5.0	S6-L-M112-10.0
Power cable (with brake)	S6-L-B112-3.0	S6-L-B112-5.0	S6-L-B112-10.0
Absolute encoder cable	S6-L-P021-3.0	S6-L-P021-5.0	S6-L-P021-10.0
Incremental encoder cable	S6-L-P011-3.0	S6-L-P011-5.0	S6-L-P011-10.0

Table 1-9 Selection of cables for the MS1H3 motor (4.4 kW or above)

Cable Type	Cable Length (m)		
	3.0	5.0	10.0
Power cable (without brake)	S6-L-M122-3.0	S6-L-M122-5.0	S6-L-M122-10.0
Power cable (with brake)	S6-L-B022-3.0	S6-L-B022-5.0	S6-L-B022-10.0
Absolute encoder cable	S6-L-P021-3.0	S6-L-P021-5.0	S6-L-P021-10.0
Incremental encoder cable	S6-L-P011-3.0	S6-L-P011-5.0	S6-L-P011-10.0

Table 1-10 Connector kits

Motor Model	Connector Kit
MS1H1-*******-A3*** MS1H4-*******-A3*** (0.1 kW to 1.0 kW)	S6-C6: DB15 terminal S6-C9: Battery kit for dual-axis encoder S6-C12: DB9 terminal S6-C23: Jonhon terminal - power cable - MS1 motor adapter cable S6-C24: Jonhon terminal - encoder cable - MS1 motor adapter cable
MS1H2-*******-A3*** (1.0 kW to 2.5 kW)	S6-C6: DB15 terminal S6-C9: Battery kit for dual-axis encoder S6-C2: 20-18 aviation plug, DB9 terminal, 20-29 aviation plug
MS1H2-*******-A3*** (3.0 kW to 5.0 kW)	S6-C6: DB15 terminal S6-C9: Battery kit for dual-axis encoder S6-C2: 20-18 aviation plug, DB9 terminal, 20-29 aviation plug
MS1H3-*******-A3*** (0.85 kW to 1.8 kW)	S6-C6: DB15 terminal S6-C9: Battery kit for dual-axis encoder S6-C2: 20-18 aviation plug, DB9 terminal, 20-29 aviation plug

Motor Model	Connector Kit
MS1H3-*******-A3*** (2.9 kW to 7.5 kW)	S6-C6: DB15 terminal S6-C9: Battery kit for dual-axis encoder S6-C3: 20-22 aviation plug, DB9 terminal, 20-29 aviation plug

[Note]: A connector kit is required only when you prepare the cables yourself. If you select Inovance matching cables, no connector kit is required.

If you use an Inovance absolute encoder motor, the optional battery kit S6-C4 (single-axis battery, battery box) or S6-C9 (dual-axis battery, battery box) is required beside the matching cables.

Table 1-11 Optional communication cables

Cable Model	Description
S6-L-T04-0.3 S6-L-T04-3.0	Servo drive to PC communication cable Communication cable for multi-servo drive parallel connection and cable for communication between the servo drive and the host controller

1.4.2 Cables for ISMG Series Motor (Including Communication Cable)

Table 1-12 Optional communication cable for servo motor

Item	Servo Motor Encoder Cable		
	L = 3.0 m	L = 5.0 m	L = 10.0 m
ISMG1(G2)-*******-A3***	S6-L-P021-3.0-PTC	S6-L-P021-5.0-PTC	S6-L-P021-10.0-PTC
Appearance of Servo Motor Encoder Cable			

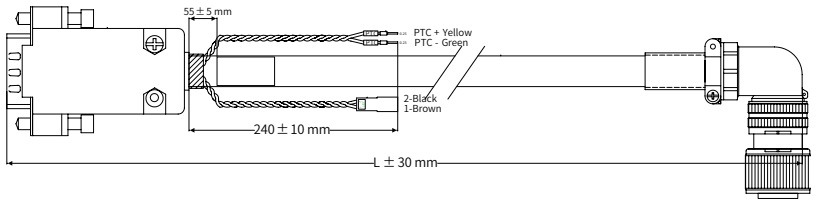

Table 1-13 Installation options

Model	Description
ISMG1-B01	Mounting bracket for the ISMG1 natural ventilated motor
ISMG2-B01	Mounting bracket for the ISMG2 natural ventilated motor
ISMG1-B02	Mounting bracket for the ISMG1 air-cooled motor
ISMG2-B02	Mounting bracket for the ISMG2 air-cooled motor
MD500-AZJ-T5	Through-hole mounting bracket for the SIZE-G servo drive
MD500-AZJ-T6	Through-hole mounting bracket for the SIZE-H servo drive
MD500-AZJ-T7	Through-hole mounting bracket for the SIZE-I servo drive

Chapter 2 Installation

WARNING
◆ Read content in Safety Precautions carefully. Failure to comply may cause serious consequences.

CAUTION
◆ Observe the installation direction described in this chapter. Failure to comply may result in equipment fault or damage. ◆ Do not install or operate damaged or defective equipment. Failure to comply may result in physical injury. ◆ Do not install the equipment in environments exposed to water splashes or corrosive gases. Failure to comply may result in equipment fault. ◆ Do not install the equipment near inflammable gases or combustible objects. Failure to comply may result in a fire or electric shock. ◆ Install the equipment inside a fire-proof cabinet that provides electrical protection. Failure to comply may result in a fire. ◆ Reserve specified clearance between the servo drive and its adjacent machines and the interior surface of the control cabinet. Failure to comply may result in a fire or equipment fault. ◆ Do not put heavy objects on the equipment. Failure to comply may result in physical injury or equipment damage. ◆ Do not impose large impact on the equipment. Failure to comply may result in equipment damage. ◆ Do not block the air inlet/outlet of the equipment or allow unwanted objects to fall into the equipment. Failure to comply may result in a fire or equipment fault.

2.1 Installation of the Power Supply Unit and Drive Unit

2.1.1 Installation Environment

1 Installation location

- Ambient temperature: The service life of the drive is greatly influenced by the ambient temperature. Operate the drive within the allowable temperature range (–10°C to +50°C).
- Altitude: When the installation altitude exceeds 1000 m, the IS810 drive must be derated according to the recommended capacitance value.
- Mounting surface requirements: The mounting surface of the IS810 drive must be flame retardant. Its structural strength must meet the strength requirements for transportation, storage, and running under normal conditions to avoid damages due to vibration or excessive deformation of the installation surface. The mounting surface must remain vertical to the horizontal ground and be secured to the cabinet properly. The mounting surface must be able to withstand not less than four times the total weight of the installed equipment.
- Cooling requirements: A large amount of heat may be generated during the operation of the cabinet. There must be plenty of cooling space in the installation area. Ensure that the cooling holes of the cabinet are not blocked.
- Vibration requirements: Install the device at a place away from vibration. Ensure the vibration does not exceed 0.6 g. Keep the device away from machines such as punch presses.

■ Other requirements: Install the device in an environment free from direct sunlight, moisture, and water drops, as well as corrosive, inflammable, or explosive gases, and grease dirt and dust.

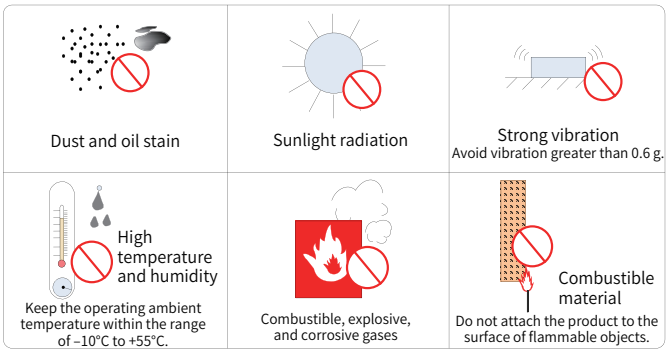

Figure 2-1 Installation environment requirements

This product must be installed in a cabinet as part of a final system that is provided with effective flame-proof, electrical, and mechanical protection. The installation must conform to local and regional laws and regulations, and to relevant IEC requirements.

2 Environment condition

Table 2-1 Installation environment

Item	Description
Ambient temperature	Operating temperature range: –10°C to +50°C; air temperature change: less than 0.5°C/min. For temperature above 40°C, derate the rated current by 1.5% for every additional 1°C. Maximum temperature: 50°C Storage temperature: –25°C to +70°C Transportation temperature: –25°C to +70°C Ambient humidity range: 5% to 95%, standard
Relative ambient humidity	Ambient humidity range: 5% to 95%. A standard servo drive is not applicable in an environment or place with corrosive gases. Please purchase a special servo drive with corrosion resistant casing and protective coating. Storage humidity: 5% to 95% Transportation humidity: below 95% at 40°C
IP rating	IP20
Altitude	1000 m. For altitude above 1000 m, derate by 1% for every additional 100 m. Maximum altitude: 3000 m

2.1.2 Requirements of Installation Dimensions and Clearance

1 Product dimensions (unit: mm)

1) Power supply unit

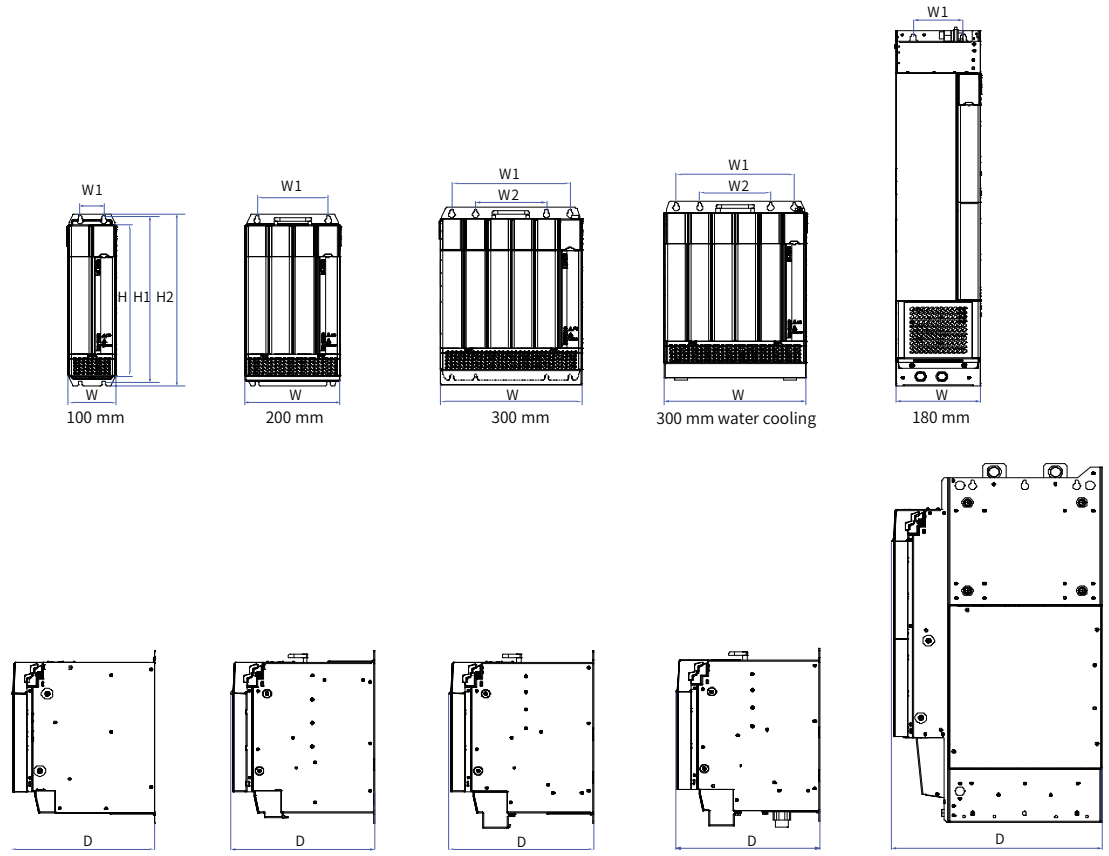

Figure 2-2 Outline dimensions of MD810-20M4T**G***

Model: MD810-20M4T***G***(W)	Physical Dimensions	Voltage Class
45	[H]: 350 mm, [H1]: 384 mm [H2]: 400 mm, [W]: 100 mm [W1]: 50 mm, [D]: 305 mm	380 VAC to 480 VAC
110	[H]: 350 mm, [H1]: 384 mm [H2]: 400 mm, [W]: 200 mm [W1]: 150 mm, [D]: 305 mm	
160 (air cooling)	[H]: 350 mm, [H1]: 384 mm [H2]: 400 mm, [W]: 300 mm [W1]: 250 mm, [W2]: 150 mm [D]: 305 mm	
160 (water cooling)	[H]: 350 mm, [H1]: 384 mm [H2]: 415.5 mm, [W]: 300 mm [W1]: 250 mm, [W2]: 150 mm [D]: 305 mm	
355	[H]: 800 mm, [H1]: 795 mm [H2]: 832 mm, [W]: 180 mm [W1]: 105 mm, [D]: 445 mm	

2) Drive unit

■ Outline dimensions of IS810P50M4T****** (SIZE 1)

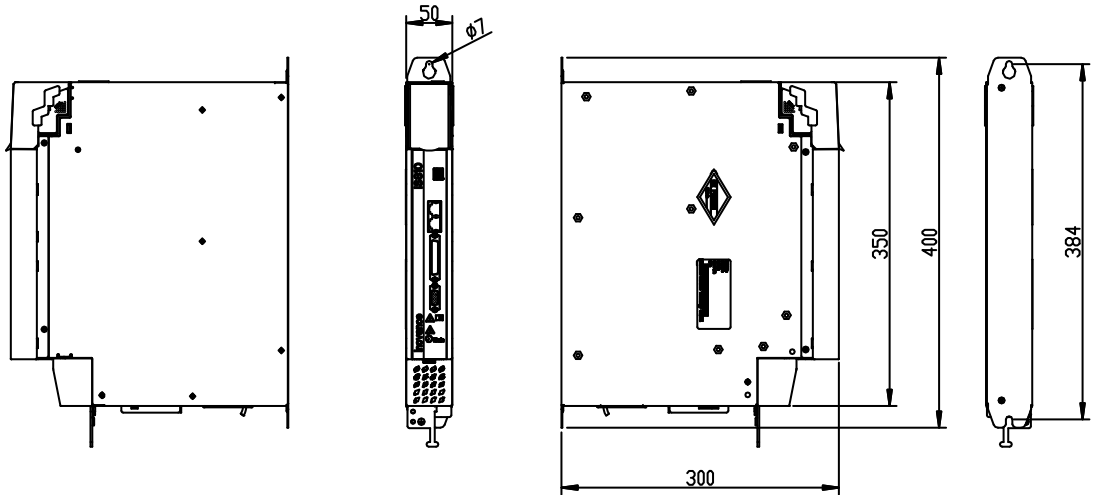

Figure 2-3 Outline dimensions of IS810P50M4T****** (SIZE 1)

■ Outline dimensions of IS810P50M4T****** (SIZE 2)

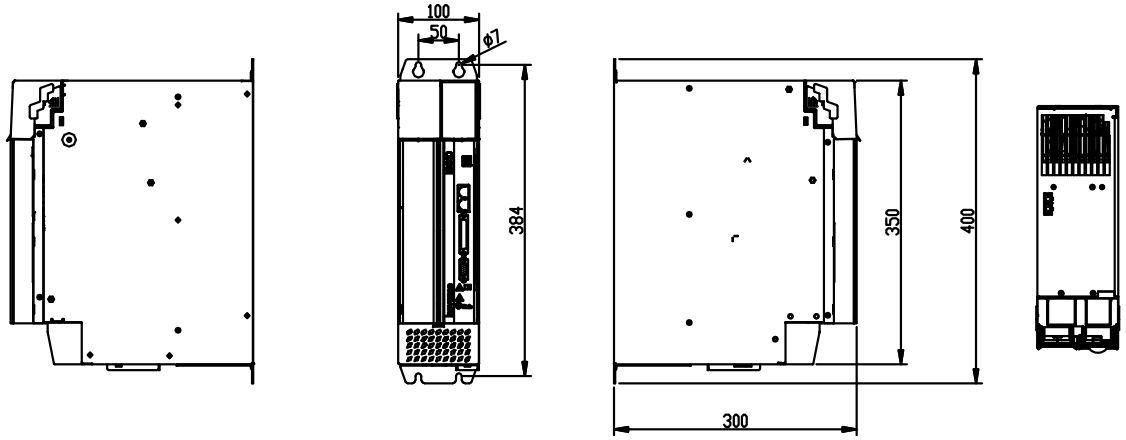

Figure 2-4 Outline dimensions of IS810P50M4T****** (SIZE 2)

■ Outline dimensions of IS810P50M4T****** (SIZE 3)

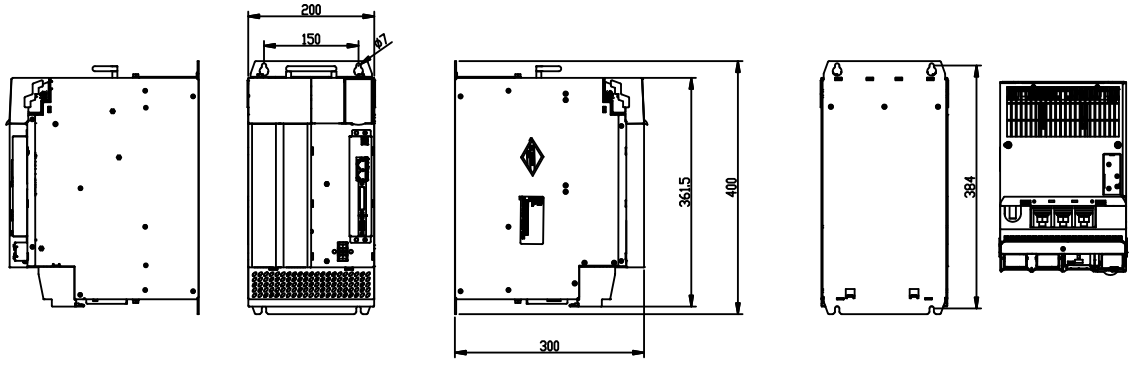

Figure 2-5 Outline dimensions of IS810P50M4T****** (SIZE 3)

2 Clearance

The power supply units are divided into book-size units (100 mm, 200 mm, and 300 mm wide) and vertical tower units (180 mm wide). The recommended installation methods are single-rack installation and dual-rack installation. The following table shows the minimum clearance between two racks for dual-rack installation. An air guide plate must be installed on the lower rack.

Table 2-2 Minimum clearance between upper and lower power supply units

Item	100 mm Wide Unit	200 mm Wide Unit	300 mm Wide Unit	180 mm Wide Unit
	Book-size Unit			Vertical Tower Unit
S1	⩾ 300 mm	⩾ 300 mm	⩾ 300 mm	⩾ 300 mm
S2	⩾ 300 mm	⩾ 300 mm	⩾ 300 mm	⩾ 500 mm
S3	⩾ 300 mm	⩾ 300 mm	⩾ 300 mm	-

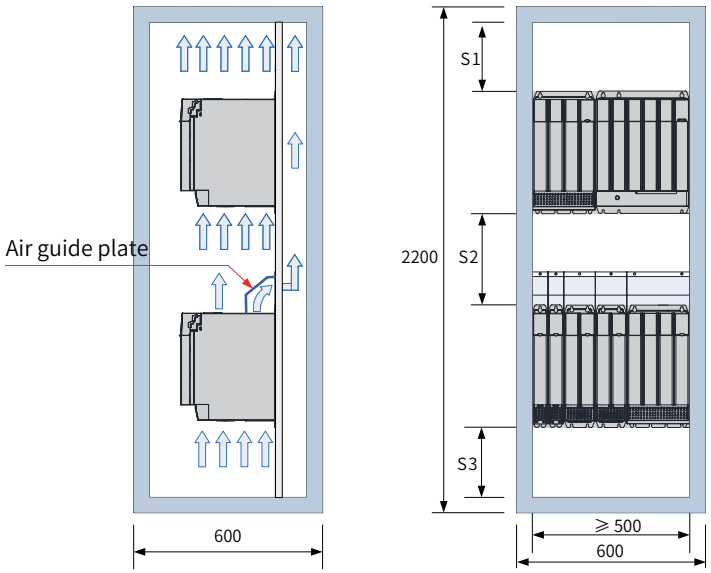

Figure 2-6 Clearance for dual-rack installation of book-size power supply units

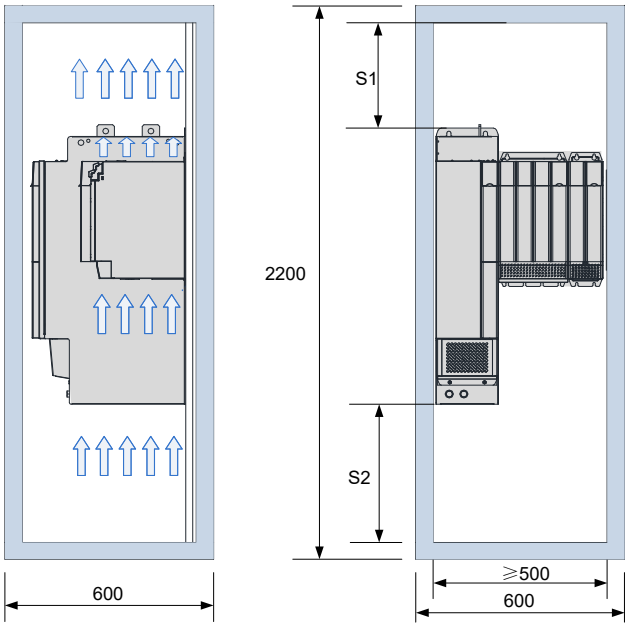

Figure 2-7 Clearance for dual-rack installation of vertical tower power supply units

Installation direction: The product must only be installed vertically, not horizontally or on one side.

2.2 Installation of the Servo Drive

2.2.1 Cabinet-mounted Installation

This product can be installed inside a cabinet in a single-rack or dual-rack installation manner. Book-size units must be installed in a row closely to avoid damage during transportation. Do not install two or even one device separately. Optionally, install an air guide plate on the upper rack for dual-rack installation. The through-hole mounting method supports only single-rack installation.

■ Single-rack installation

Book-size Unit	Vertical Tower Unit
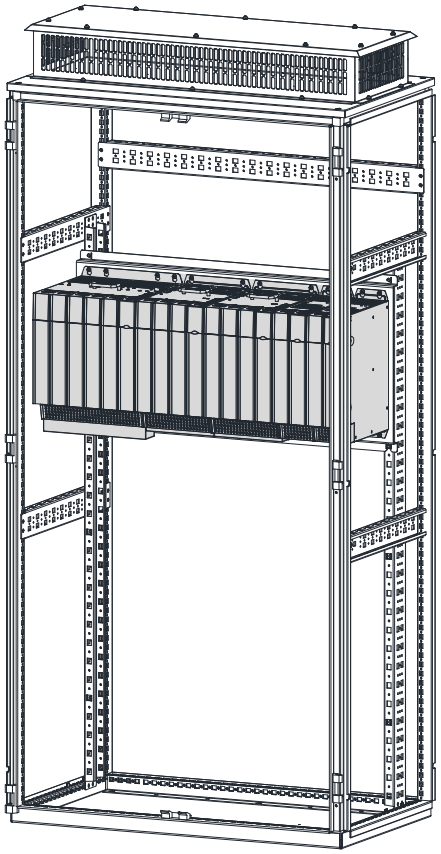	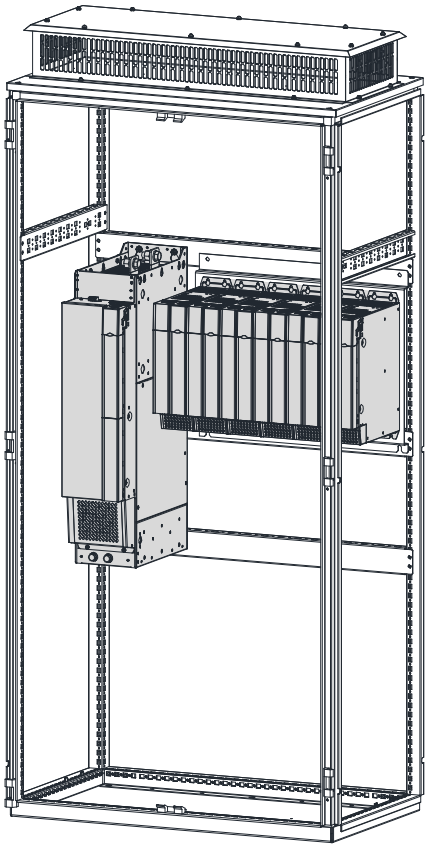

■ Dual-rack installation

Book-size Unit	Vertical Tower Unit
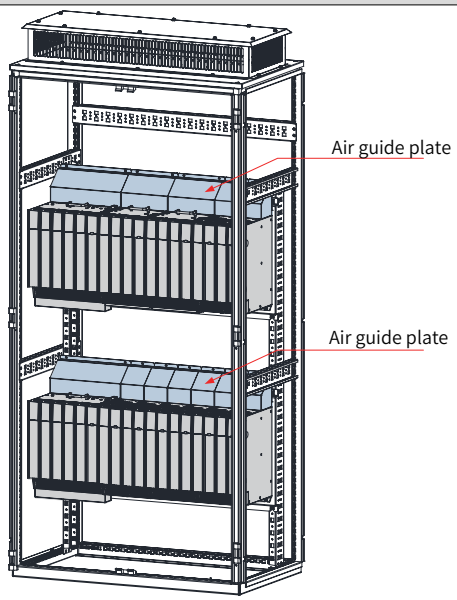	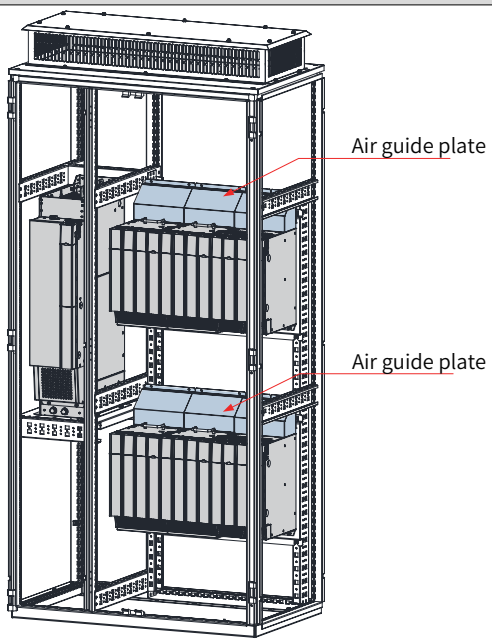

NOTE

- Optionally, install an air guide plate on the upper rack for dual-rack installation.
- Do not merely install two or fewer units.
- The through-hole mounting method supports only single-rack installation.

2.2.2 Removal and Installation of Power Supply Unit Covers

Removal		
(1) Lift the translucent keypad cover. Loosen the screws in the upper cover with a screwdriver. 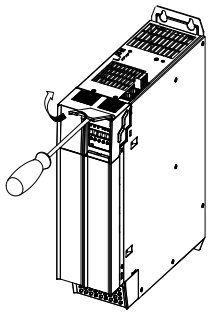	(2) Remove the upper cover by turning it frontward. 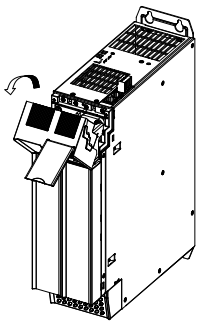	(3) Pull out the keypad box in its entirety. 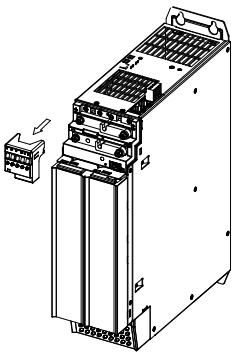
(4) Hold the bottom of the lower cover and remove it. 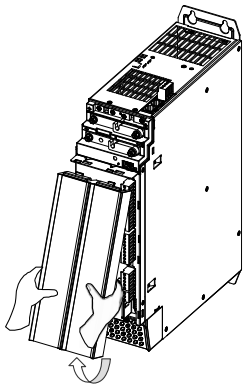	(5) Push inwards on the latch in the power terminal cover with a tool (screwdriver) to release the cover. 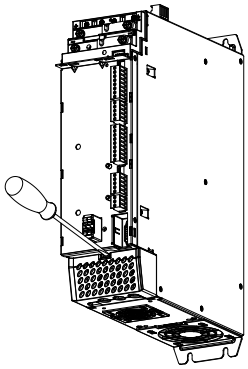	(6) Remove the power terminal cover. 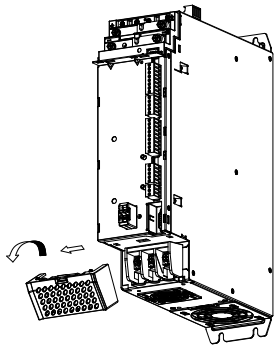

Installation		
(1) Align the power terminal cover with the position of the latch of the bus seat. Press the power terminal cover to secure and fix it. 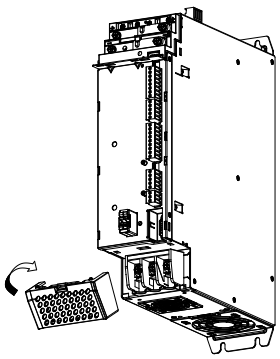	(2) Insert the keypad. 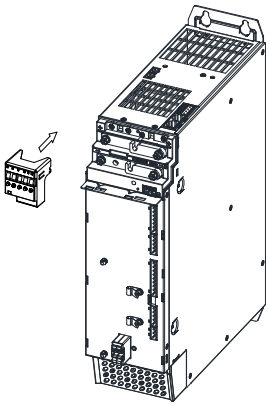	(3) Locate the upper cover at its latch position and fix the cover, and fasten the screws with a screwdriver. 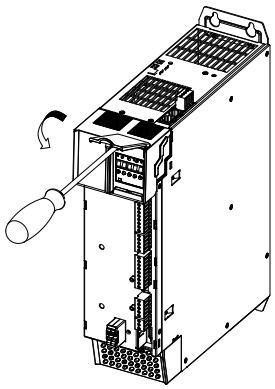

Installation		
(4) Insert the top end of the lower cover below the upper cover. Turn the bottom end of the lower cover to secure it. 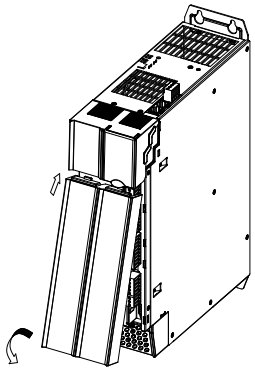	(5) Installation is completed. 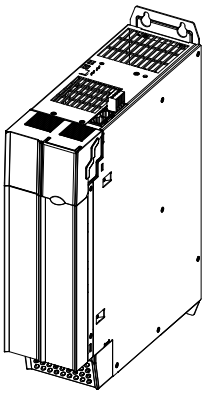	-

2.2.3 Backplate Mounting

Recommended torque for installation (N·m):

Item	M3	M4	M5	M6	M8	M10	M12
Electric connection	0.55	1.2	2.8	4.8	13	20	35

Ensure that there is sufficient space on the left of the power supply unit for installation.

For a multi-axis system, the top surfaces of power supply units must be flush.

Mark the position of the tapped holes for installation and drill a screw hole in the base plate for each retaining screw.

The servo drive must be installed on the base plate vertically.

Below is the installation diagram:

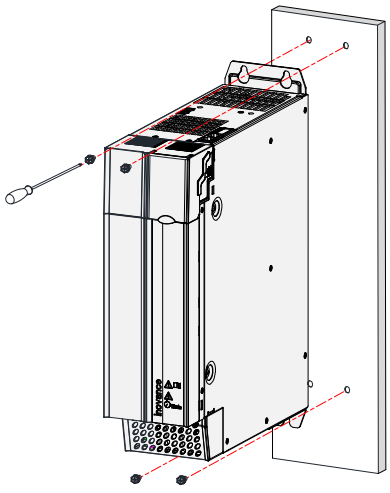

Figure 2-8 Backplate mounting diagram of power supply unit

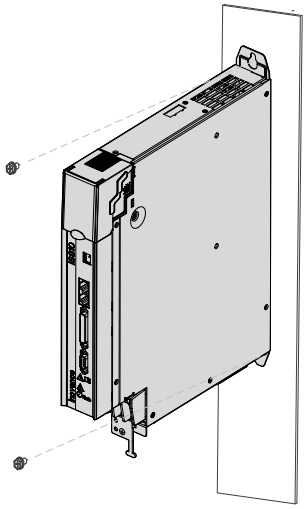

Figure 2-9 Backplate mounting diagram of drive unit

■ Cooling

Make sure that the servo drive is installed vertically to the wall. Cool the servo drive with natural convection or a cooling fan.

As shown in the preceding figure, keep sufficient clearances around the drive unit to ensure the cooling effect of the cooling fan or natural convection. Install a cooling fan above the upper part of the servo drive to avoid local excessive temperature rise and keep an even temperature inside the control cabinet.

■ Grounding

Ground the grounding terminal properly. Failure to comply may result in an electric shock or malfunction due to interference.

■ Cable routing requirements

Route cables downwards (see the following figure) to prevent liquid from flowing into the servo drive along the cables.

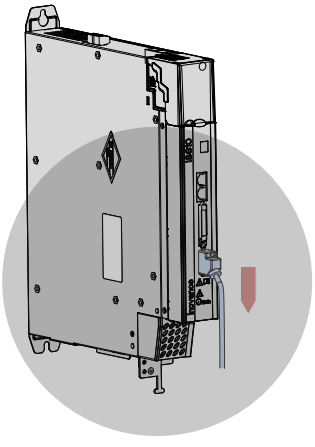

Figure 2-10 Routing direction

2.3 Installation of the Servo Motor

2.3.1 Installation Precautions

- Install the servo motor in an environment free from corrosive or flammable gases or combustible materials, such as hydrogen sulfide, chlorine, ammonia, sulfur gas, chloride gas, acid, alkali, and salt.
- Use a servo motor with oil sealing in places with grinding fluid, oil mist, ferrous powder, or cuttings.
- Install the servo motor in a place away from heat sources such as a heating stove.
- Do not use the servo motor in an enclosed environment. Working in an enclosed environment will lead to high temperature of the servo motor, which will shorten the motor's service life.

Table 2-3 Installation precautions

Item	Description
Rust-proof treatment	Wipe up the anti-rust agent at the shaft extension before installing the servo motor, and then take rust-proof measures.
Encoder	Do not strike the shaft extension during installation. Failure to comply may damage the internal encoder. 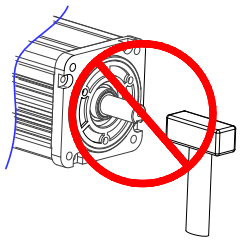
	◆ To install a pulley on a servo motor shaft with a keyway, use the screw hole at the shaft end. To fit the pulley, insert a double-end screw into the screw hole of the shaft, put a washer on the coupling end, and use a nut to fix the pulley. ◆ For a servo motor shaft with a keyway, use the screw hole at the shaft end for installation. For a shaft without a keyway, use friction coupling or similar method for installation. ◆ When removing the pulley, use a pulley remover to protect the shaft from suffering severe impact from load. ◆ To ensure safety, install a protective cover or a similar device at the rotary area, such as the pulley mounted on the shaft. 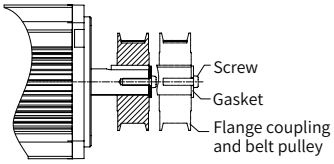
Alignment	◆ Use the coupling for mechanical connection and align the axis of the servo motor with the axis of the equipment. When installing the servo motor, make sure that the alignment accuracy satisfies the requirements shown in the following figure. If the axes are not aligned properly, vibration will be generated, which may damage the bearings and the encoder. 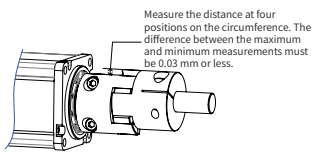
Direction	◆ The servo motor can be installed horizontally or vertically.

<table>
<tr><th>Item</th><th>Description</th></tr>
<tr><td>Oil and water countermeasures</td><td>(1) Do not submerge the servo motor or cables into oil or water during use.
(2) Confirm the IP rating of the servo motor when the motor is to be used in a place with water drops (except for the shaft opening section).
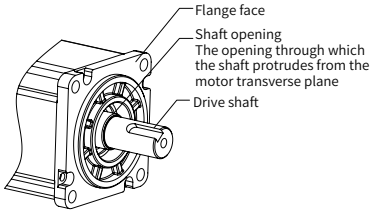

(3) Install the motor with its cable connecting ports facing downwards (as shown in the following figure) when the motor is to be used in a place with liquid, to prevent the liquid from flowing into the motor along the cable.
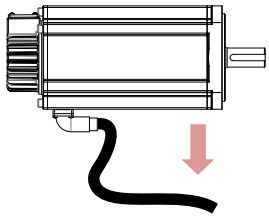
(4) Use a servo motor with oil sealing if the shaft opening section is exposed to oil drops.
(5) Abide by the following requirements when using a servo motor with oil sealing:
Make sure that the oil level is lower than the oil sealing lip during use.
Avoid oil accumulation at the oil sealing lip when the servo motor is installed vertically upward.</td></tr>
<tr><td>Stress of cables</td><td>◆ Do not bend or apply tension to the cables, especially signal cables whose conductor is only 0.2 mm or 0.3 mm thick. Do not pull the cables tightly during wiring.</td></tr>
<tr><td>Connector</td><td>Abide by the following requirements when connecting the connector:
◆ Ensure that there are no foreign matters, such as waste and sheet metal inside the connector.
◆ When connecting the connector to the servo motor, connect the connector to the main circuit cable side of the servo motor first, and ensure that the grounding cable of the main circuit cables is reliably connected. If the connector is first connected to the encoder cable side, the encoder may become faulty due to the potential differences between PEs.
◆ Ensure that the pins are correctly arranged during wiring.
◆ The connector is made up of resins. Do not strike the connector to avoid damage.
◆ When transporting the servo motor with motor cables connected, hold the servo motor body instead of catching the cables. Failure to comply may damage the connector and the cables.
◆ If bent cables are used, do not apply stress to the connector during wiring. Failure to comply may damage the connector.</td></tr>
</table>

2.3.2 Installation Environment

Table 2-4 Installation environment

<table>
<tr><th>Item</th><th>MS1 Series Motor</th></tr>
<tr><td>Ambient temperature</td><td>0°C to 40°C (non-freezing). Derate according to the following table for temperature above 40°C.
<table>
<tr><td>Ambient temperature (°C)</td><td>40</td><td>45</td><td>50</td><td>55</td><td>60</td></tr>
<tr><td>Derating coefficient</td><td>1</td><td>0.952</td><td>0.901</td><td>0.855</td><td>0.781</td></tr>
</table></td></tr>
<tr><td>Ambient humidity</td><td>20% to 90% RH (non-condensing)</td></tr>
</table>

<table>
<tr><th>Item</th><th colspan="2">MS1 Series Motor</th></tr>
<tr><td>Storage temperature</td><td colspan="2">–20°C to +60°C (peak temperature guarantee: 80°C for 72 hours)</td></tr>
<tr><td>Storage humidity</td><td colspan="2">20% to 90% RH (non-condensing)</td></tr>
<tr><td>Vibration</td><td colspan="2">Below 49 m/s^2</td></tr>
<tr><td>Impact</td><td colspan="2">Below 490 m/s^2</td></tr>
<tr><td>IP rating</td><td>H1 and H4: IP65 (except for the shaft opening section and motor connectors)
Others: IP67 (except for the shaft opening section and motor connectors)</td><td>H1 and H4: IP67 (except for the shaft opening section and motor connectors)</td></tr>
<tr><td>Altitude</td><td colspan="2">Below 1000 m. Derate based on the following coefficients when above 1000 m.
<table>
<tr><td>Altitude (m)</td><td>1000</td><td>2000</td><td>3000</td><td>4000</td><td>5000</td></tr>
<tr><td>Derating coefficient</td><td>1</td><td>0.947</td><td>0.887</td><td>0.824</td><td>0.645</td></tr>
</table></td></tr>
</table>

2.3.3 Outline Dimensions of MS1 Series Motor

1 Flange size: 40

■ Terminal-type motor

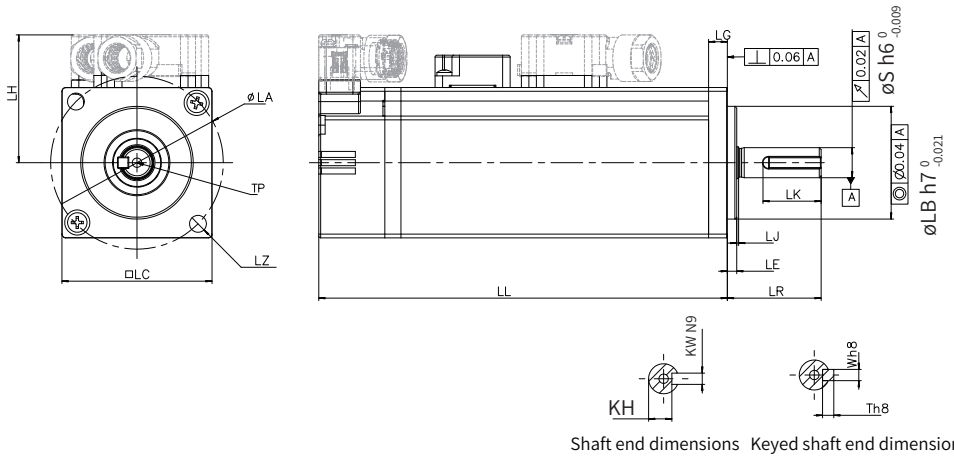

Shaft end dimensions Keyed shaft end dimensions

■ Lead-type motor

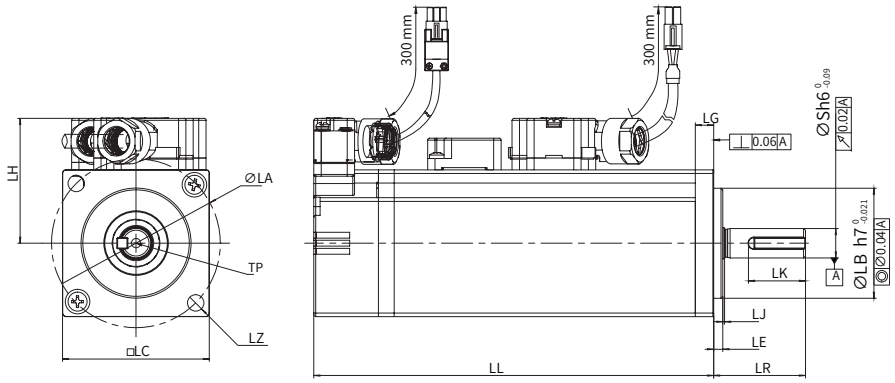

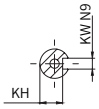

Shaft end dimensions

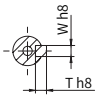

Keyed shaft end dimensions

Motor Model	LL	LC	LR	LA	LZ	LH	LG	LE	LJ
MS1H1-05B30CB-A33*Z(-S)	65 (96)	40	25±0.5	46	2-φ4.5	34	5	2.5±0.5	0.5±0.35
MS1H1-10B30CB-A33*Z(-S)	77.5 (109)	40	25±0.5	46	2-φ4.5	34	5	2.5±0.5	0.5±0.35
Motor Model	S	LB	TP	LK	KH	KW	W	T	Weight (kg)
MS1H1-05B30CB-A33*Z(-S)	8	30	M3x6	15.5	6.2 $^{0}_{-0.1}$	3	3	3	0.39 (0.50)
MS1H1-10B30CB-A33*Z(-S)	8	30	M3x6	15.5	6.2 $^{0}_{-0.1}$	3	3	3	0.45 (0.64)

NOTE

◆ The unit of dimensions in the table is millimeter (mm).

◆ The torque for fastening the terminal screws must be 0.19 N·m to 0.21 N·m. Excessive torque may cause damage.

◆ Parenthesized values are for motors with holding brake.

2 Flange size: 60

■ Terminal-type motor

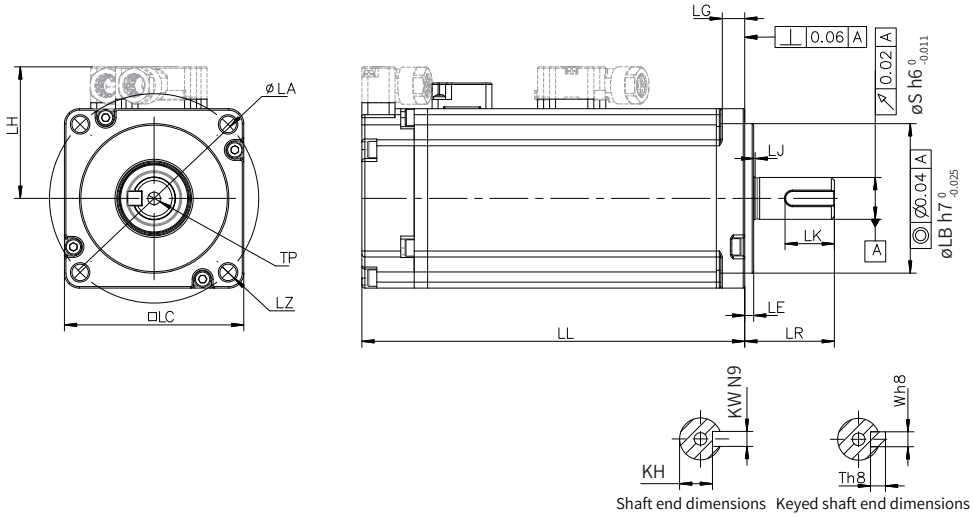

Shaft end dimensions Keyed shaft end dimensions

■ Lead-type motor

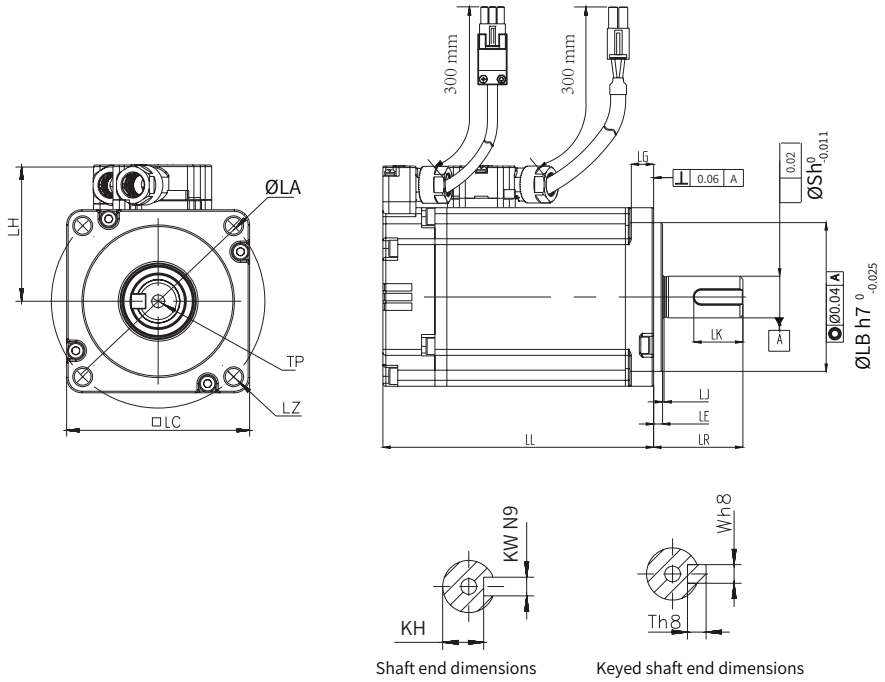

Shaft end dimensions Keyed shaft end dimensions

Motor Model	LL	LC	LR	LA	LZ	LH	LG	LE	LJ
MS1H1-20B30CB-A33*Z(-S)	72.5 (100)	60	30±0.5	70	4-φ5.5	44	7.5	3±0.5	0.5±0.35
MS1H1-40B30CB-A33*Z(-S)	91 (119)	60	30±0.5	70	4-φ5.5	44	7.5	3±0.5	0.5±0.35
MS1H4-40B30CB-A33*Z(-S)	105 (128)	60	30±0.5	70	4-φ5.5	44	7.5	3±0.5	0.5±0.35
Motor Model	S	LB	TP	LK	KH	KW	W	T	Weight (kg)
MS1H1-20B30CB-A33*Z(-S)	14	50	M5x8	16.5	11 $^{0}_{-0.1}$	5	5	5	0.78 (1.16)
MS1H1-40B30CB-A33*Z(-S)	14	50	M5x8	16.5	11 $^{0}_{-0.1}$	5	5	5	1.11 (1.48)
MS1H4-40B30CB-A33*Z(-S)	14	50	M5x8	16.5	11 $^{0}_{-0.1}$	5	5	5	1.27 (1.62)

NOTE

◆ The unit of dimensions in the table is millimeter (mm).

◆ The torque for fastening the terminal screws must be 0.19 N·m to 0.21 N·m. Excessive torque may cause damage.

◆ Parenthesized values are for motors with holding brake.

3 Flange size: 80

■ Terminal-type motor

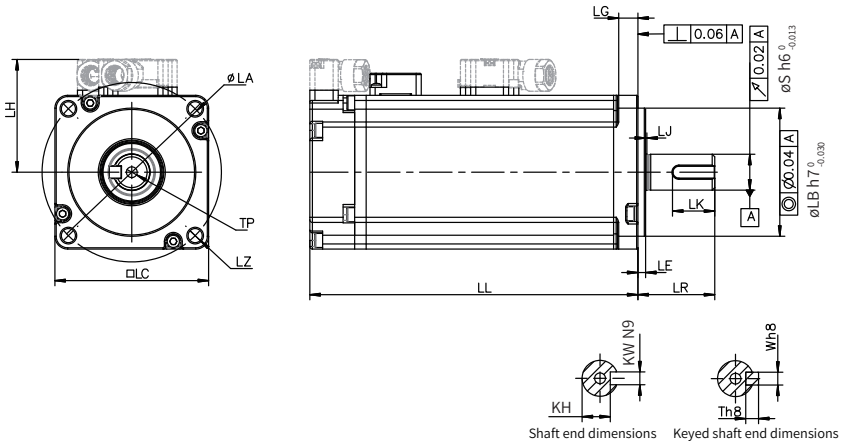

■ Lead-type motor

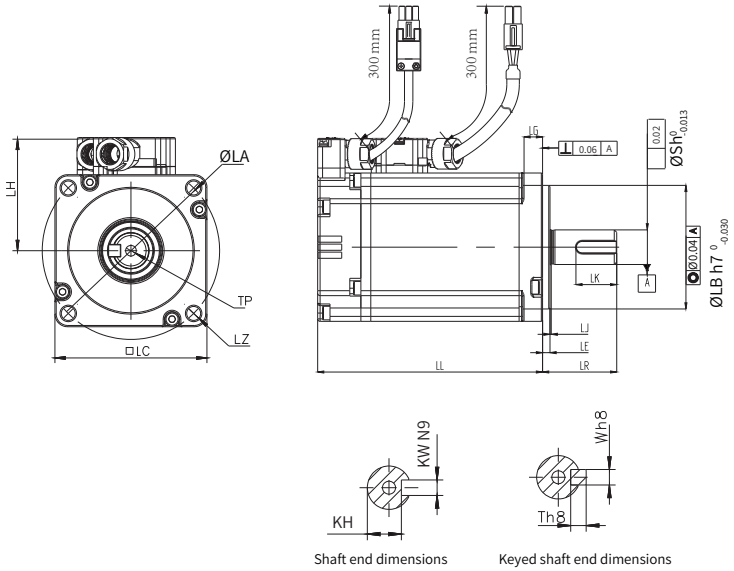

Motor Model	LL	LC	LR	LA	LZ	LH	LG	LE	LJ
MS1H1-55B30CB-A331Z(-S)	96.2	80	35±0.5	90	4-φ7	54	7.7	3±0.5	0.5±0.35
MS1H1-75B30CB-A33*Z(-S)	107 (140)	80	35±0.5	90	4-φ7	54	7.7	3±0.5	0.5±0.35
MS1H1-10C30CB-A331Z(-S)	118.2	80	35±0.5	90	4-φ7	54	7.7	3±0.5	0.5±0.35
MS1H4-75B30CB-A33*Z(-S)	117.5 (147.5)	80	35±0.5	90	4-φ7	54	7.7	3±0.5	0.5±0.35
Motor Model	S	LB	TP	LK	KH	KW	W	T	Weight (kg)
MS1H1-55B30CB-A331Z(-S)	19	70	M6x20	25	15.5 $^{0}_{-0.1}$	6	6	6	1.85
MS1H1-75B30CB-A33*Z(-S)	19	70	M6x20	25	15.5 $^{0}_{-0.1}$	6	6	6	2.18 (2.82)
MS1H1-10C30CB-A331Z(-S)	19	70	M6x20	25	15.5 $^{0}_{-0.1}$	6	6	6	2.55
MS1H4-75B30CB-A33*Z(-S)	19	70	M6x20	25	15.5 $^{0}_{-0.1}$	6	6	6	2.40 (3.04)

NOTE

◆ The unit of dimensions in the table is millimeter (mm).

◆ The torque for fastening the terminal screws must be 0.19 N·m to 0.21 N·m. Excessive torque may cause damage.

◆ Parenthesized values are for motors with holding brake.

4 Flange size: 100

■ Outline dimensions of MS1H2 motor

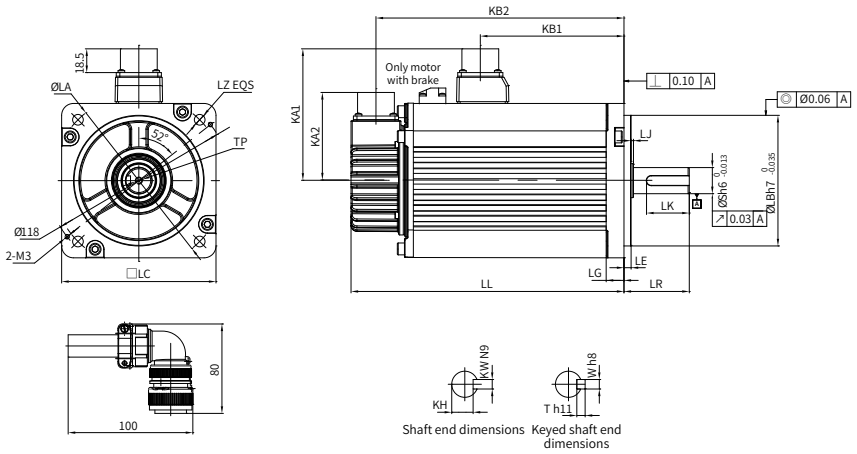

Motor Model	LL	LC	LE	LA	LZ	KA1	KA2	KW	LG	KB1	KB2
MS1H2-10C30CB(D)-A33*Z	164 (213.5)	100	5±0.3	115	4-Φ7	88	74	8	10	94.5 (101)	143.5 (192.5)
MS1H2-15C30CB(D)-A33*Z	189 (239)	100	5±0.3	115	4-Φ7	88	74	8	10	119.5 (128)	168.5 (219.5)
MS1H2-20C30CD-A33*Z(-S4)	214 (265)	100	5±0.3	115	4-Φ7	88	74	8	10	144.5 (153)	193.5 (244)
MS1H2-25C30CD-A33*Z(-S4)	240.5 (290)	100	5±0.3	115	4-Φ7	88	74	8	10	169.5 (178)	218.5 (269)

Motor Model	LR	S	LB	TP	LK	KH	LJ	W	T	Weight (kg)
MS1H2-10C30CB(D)-A33*Z	45±1	24	95	M8x16	36	$20^{0}_{-0.2}$	2.5±0.75	8	7	5.11 (6.41)
MS1H2-15C30CB(D)-A33*Z	45±1	24	95	M8x16	36	$20^{0}_{-0.2}$	2.5±0.75	8	7	6.22 (7.52)
MS1H2-20C30CD-A33*Z(-S4)	45±1	24	95	M8x16	36	$20^{0}_{-0.2}$	2.5±0.75	8	7	7.39 (8.7)
MS1H2-25C30CD-A33*Z(-S4)	45±1	24	95	M8x16	36	$20^{0}_{-0.2}$	2.5±0.75	8	7	8.55 (9.8)

NOTE

- ◆ The unit of dimensions in the table is millimeter (mm).
- ◆ The torque for fastening the terminal screws must be 0.19 N·m to 0.21 N·m. Excessive torque may cause damage.
- ◆ Parenthesized values are for motors with holding brake.
- ◆ (-S4)* indicates the model with brake is S4 duty.

5 Flange size: 130

■ Outline dimensions of MS1H2 motor

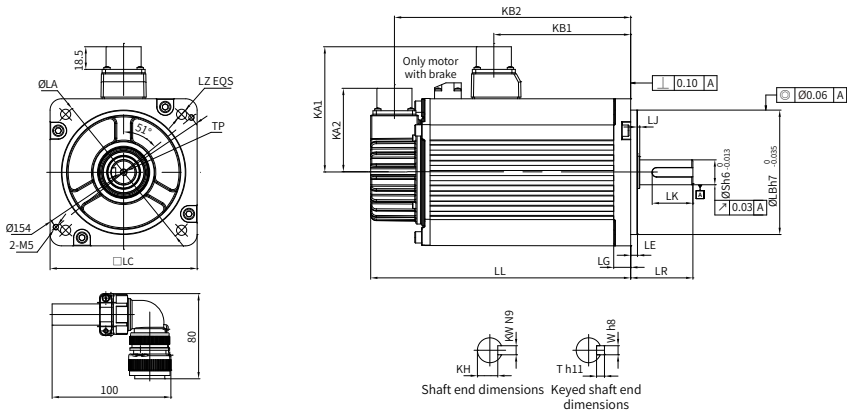

◆ Outline dimensions of MS1H3 motor

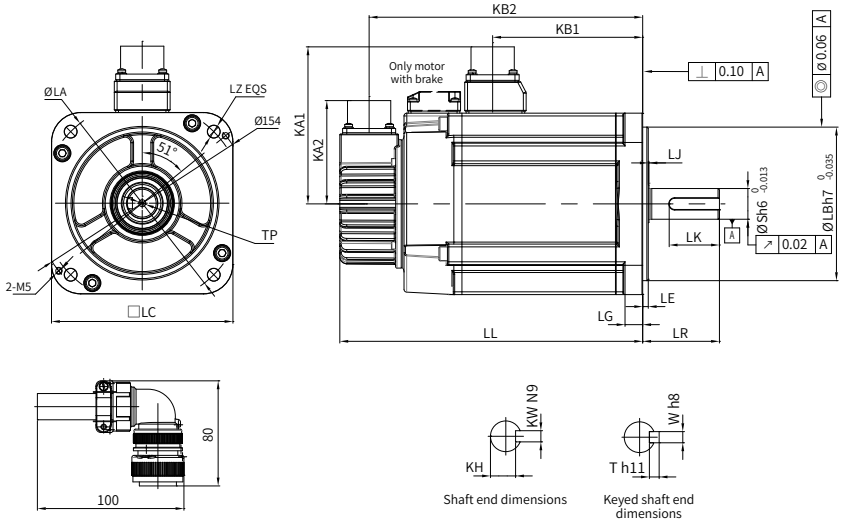

Motor Model	LC	LL	LR	LA	LZ	KA1	KB1	KA2	KB2	LG
MS1H2-30C30CD-A33*Z(-S4)	130	209.5 (265.5)	63±1	145	4-φ9	103	136 (139)	74	188.5 (244.5)	14
MS1H2-40C30CD-A33*Z(-S4)	130	252 (308)	63±1	145	4-φ9	103	178.5 (181.5)	74	231 (287)	14
MS1H2-50C30CD-A33*Z(-S4)	130	294.5 (350.5)	63±1	145	4-φ9	103	221 (224)	74	273.5 (329.5)	14
MS1H3-85B15CB-A33*Z	130	146 (182)	55±1	145	4-Φ9	103	72.5	74	125 (161)	14
MS1H3-13C15CB-A33*Z	130	163 (199)	55±1	145	4-Φ9	103	89.5	74	142 (178)	14
MS1H3-18C15CD-A33*Z	130	181 (217)	55±1	145	4-Φ9	103	107.5	74	160 (196)	14
MS1H3-85B15CD-A33*Z	130	146 (182)	55±1	145	4-φ9	103	72.5	74	125 (161)	14
MS1H3-13C15CD-A33*Z	130	163 (199)	55±1	145	4-φ9	103	89.5	74	142 (178)	14

Motor Model	LE	LJ	LB	S	TP	LK	KH	KW	W	T	Weight (kg)
MS1H2-30C30CD-A33*Z(-S4)	6±0.3	0.5±0.75	110	28	M8x20	54	24 $^{0}_{-0.2}$	8	8	7	10.73 (13.2)
MS1H2-40C30CD-A33*Z(-S4)	6±0.3	0.5±0.75	110	28	M8x20	54	24 $^{0}_{-0.2}$	8	8	7	15.43 (17.9)
MS1H2-50C30CD-A33*Z(-S4)	6±0.3	0.5±0.75	110	28	M8x20	54	24 $^{0}_{-0.2}$	8	8	7	16.2 (18.7)
MS1H3-85B15CB-A33*Z	4	0.5±0.75	110	22	M6x20	36	18 $^{0}_{-0.2}$	8	8	7	7 (8)
MS1H3-13C15CB-A33*Z	4	0.5±0.75	110	22	M6x20	36	18 $^{0}_{-0.2}$	8	8	7	8 (9.5)
MS1H3-18C15CD-A33*Z	4	0.5±0.75	110	22	M6x20	36	18 $^{0}_{-0.2}$	8	8	7	9.5 (11)
MS1H3-85B15CD-A33*Z	4	0.5±0.75	110	22	M6x20	36	18 $^{0}_{-0.2}$	8	8	7	7 (8)
MS1H3-13C15CD-A33*Z	4	0.5±0.75	110	22	M6x20	36	18 $^{0}_{-0.2}$	8	8	7	8 (9.5)

NOTE

◆ The unit of dimensions in the table is millimeter (mm).

◆ The torque for fastening the terminal screws must be 0.19 N · m to 0.21 N · m. Excessive torque may cause damage.

◆ Parenthesized values are for motors with holding brake.

◆ (-S4)* indicates the model with brake is S4 duty.

■ Flange size: 180

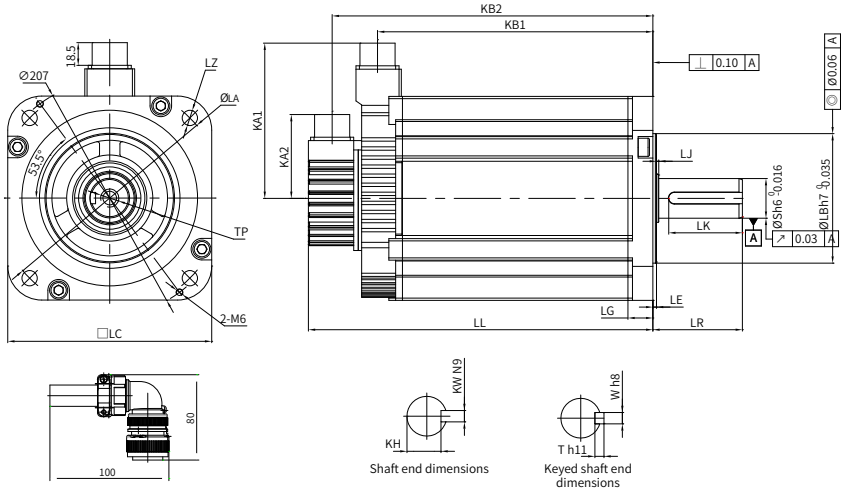

Motor Model	LL	LC	LE	LA	LZ	KA1	KA2	KW	LG	KB1	KB2
MS1H3-29C15CD-A33*Z	197 (273)	180	3.2±0.3	200	4-Φ13.5	138	74	10	18	136 (134)	177 (253)
MS1H3-44C15CD-A33*Z	230 (307)	180	3.2±0.3	200	4-Φ13.5	138	74	10	18	169 (167)	210 (286)
MS1H3-55C15CD-A33*Z	274 (350)	180	3.2±0.3	200	4-Φ13.5	138	74	12	18	213 (211)	254 (330)

MS1H3-75C15CD-A33*Z	330 (407)	180	3.2±0.3	200	4-Φ13.5	138	74	12	18	269 (267)	310 (386)

Motor Model	LR	S	LB	TP	LK	KH	LJ	W	T	Weight (kg)
MS1H3-29C15CD-A33*Z	79±1	35	114.3	M12x25	65	30 $^{0}_{-0.2}$	0.3±0.75	10	8	15 (25)
MS1H3-44C15CD-A33*Z	79±1	35	114.3	M12x25	65	30 $^{0}_{-0.2}$	0.3±0.75	10	8	19.5 (30)
MS1H3-55C15CD-A33*Z	113±1	42	114.3	M16x32	96	37 $^{0}_{-0.2}$	0.3±0.75	12	8	28 (38)
MS1H3-75C15CD-A33*Z	113±1	42	114.3	M16x32	96	37 $^{0}_{-0.2}$	0.3±0.75	12	8	32 (42)

NOTE

- ◆ The unit of dimensions in the table is millimeter (mm).
- ◆ The torque for fastening the terminal screws must be 0.19 N·m to 0.21 N·m. Excessive torque may cause damage.
- ◆ Parenthesized values are for motors with holding brake.

2.3.4 Outline Dimensions of ISMG Series Motor

1 Solid shaft, forced air-cooled motor (ISMG1) (unit: mm)

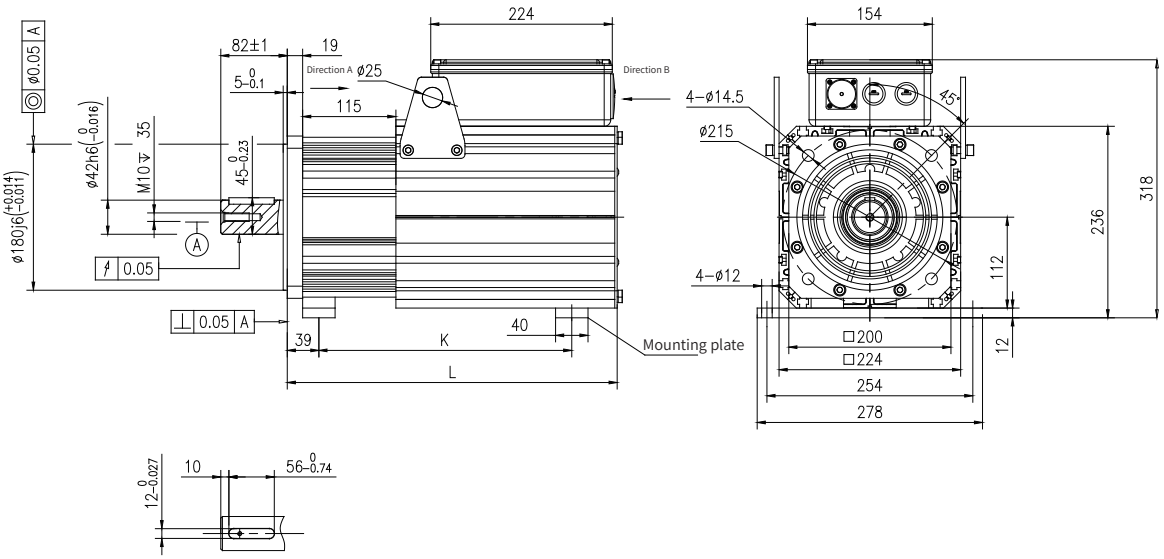

Standard component: Type A round-head flat key 12x8x56
Compliance: GB/T 1096-2003

Connector Model	Encoder Side
Aviation plug	MIL-DTL-5015 series 3102E20-29P

Motor Model	Type	L (mm)	K (mm)	Weight (kg)

ISMG1-95C15CD ISMG1-12D20CD	A331FA	415	285	45.2
ISMG1-14D15CD ISMG1-18D20CD		450	312	51.9
ISMG1-17D15CD ISMG1-23D20CD		485	354	59
ISMG1-22D15CD ISMG1-28D20CD		520	396	66
ISMG1-30D15CD ISMG1-41D20CD		590	471	79.8

The following table lists the dimensions of motor with brake:

Motor Model	Type	L (mm)	K (mm)
ISMG1-95C15CD ISMG1-11D17CD ISMG1-12D20CD	A334FA	480	396
ISMG1-14D15CD ISMG1-16D17CD ISMG1-18D20CD	A334FA	515	436
ISMG1-17D15CD ISMG1-20D17CD ISMG1-23D20CD	A334FA	550	471
ISMG1-22D15CD ISMG1-24D17CD ISMG1-28D20CD	A334FA	585	506
ISMG1-30D15CD ISMG1-34D17CD ISMG1-41D20CD	A334FA	655	576

Note: The standard models are A3 series.

The mounting baseplate is optional, and used only for ISMG1-22D15CD-A331FA and ISMG1-30D15CD-A331FA or when required. The K value is the clearance of the mounting baseplate.

The mounting baseplate is optional, and used only when required.

2 Solid shaft, forced air-cooled motor (ISMG2) (unit: mm)

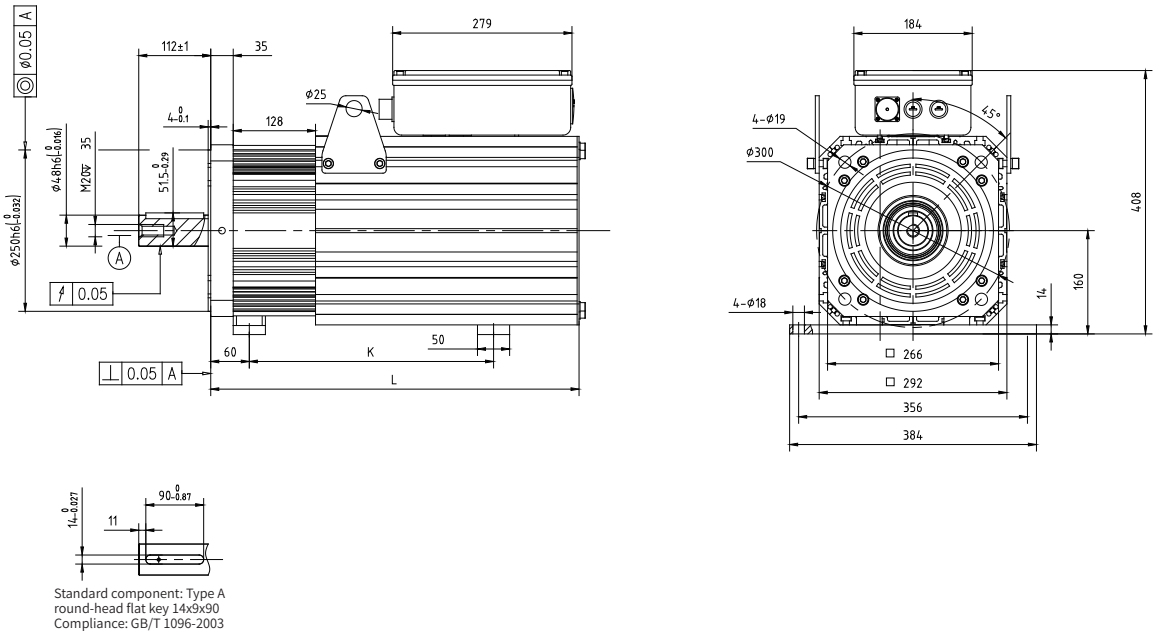

Connector Model	Encoder Side
Aviation plug	MIL-DTL-5015 series 3102E20-29P

Motor Model	L (mm)	K (mm)	Weight (kg)
ISMG2-31D15CD-A331FA ISMG2-42D20CD-A331FA	575	360	122
ISMG2-42D15CD-A331FA ISMG2-57D20CD-A331FA	625	370	141.3
ISMG2-52D15CD-A331FA ISMG2-70D20CD-A331FA	675	476	158.4
ISMG2-60D15CD-A331FA ISMG2-80D20CD-A331FA	725	476	175.4
ISMG2-80D15CD-A331FA	825	583	217

NOTE

◆ [1] Install the drive unit within the specified ambient temperature range. When the servo drive is installed in an electric cabinet, the temperature inside the cabinet must be within the specified range.

The standard models are A3 series.

The mounting baseplate is optional, and used only when required.

Chapter 3 Wiring

WARNING

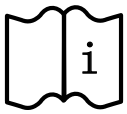

◆ Read content in Safety Precautions carefully. Failure to comply may cause serious consequences.

WARNING



◆ Never power the drive with the IT grid. Use the TN or TT grid instead. Failure to comply may result in an electrical shock.

◆ Connect an electromagnetic contactor between the power supply and the main circuit of the drive (single-phase: L1 and L2; three-phase: R, S, and T phases), to form a structure that can cut the power supply on the power side of the drive. If no electromagnetic contactor is connected, continuous large current upon faults may cause a fire.

◆ Ensure that the input voltage of the drive is within the allowable range. Failure to comply may result in product fault.

◆ Do not connect the output terminals U, V, and W of the drive to a three-phase power supply. Failure to comply may result in physical injury or a fire.

◆ Do not connect the motor terminals U, V, and W to a mains power supply. Failure to comply may result in physical injury or a fire.

◆ Use the ALM (fault signal) to cut off the main circuit power supply.

WARNING



◆ Do not connect the drive protective earth (PE) terminal to that of the control cabinet. Failure to comply may result in an electric shock.

◆ Ground the entire system. Failure to comply may result in malfunction.

WARNING

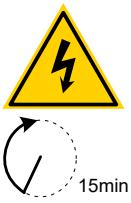

◆ After power-off, wait at least 15 minutes before further operations because residual voltage exists after power-off. Failure to comply may result in an electric shock.

CAUTION



- The specifications and installation method of external cables must comply with the applicable local regulations.
- Follow the precautions below when using the servo system on a vertical axis:
- Deploy safety devices to prevent workpieces from falling in the alarm or overtravel state.
- Ensure correct polarity of the positive and negative electrodes of the 24 V power supply. Failure to comply may result in physical injury or product damage.
- Follow the precautions below when wiring the power supply and main circuit:
- When the main circuit terminal is a connector, remove the connector from the drive before wiring.
- Only one cable can be inserted into one interface of the connector.
- Prevent short circuit between the core and adjacent cable due to burrs on the core when inserting the cable.
- Do not insulate the connection part of power supply terminals. Failure to comply may result in an electric shock.
- Do not connect a 220 V drive directly to a 380 V power supply.
- Configure a circuit breaker or other safety devices to prevent fire caused by short circuit of external cables.
- When an alarm signal is detected, cut off the power supply of the main circuit and set S-ON to OFF.
- Connect the drive to the motor directly, without connecting any electromagnetic contactor between them. Failure to comply may result in product fault.
- Never place cables under heavy objects or drag cables vigorously. Failure to comply may result in an electric shock due to cable damage.
- When connecting DO terminals to relays, ensure correct polarity of the flywheel diode. Incorrect polarity can result in product damage or signal output failure.
- Separate the main circuit cables from the I/O signal cables and encoder cables by at least 30 cm. Failure to comply may result in product malfunction.
- Use twisted pairs or multi-conductor shielded twisted pairs as the I/O signal cable or encoder cable. Failure to comply may result in product malfunction.
- The maximum wiring lengths of the I/O signal cable and the encoder cable are 3 m and 20 m, respectively.
- Use a noise filter to reduce electromagnetic interference on electronic devices around the drive.
- To avoid damage to the product, take appropriate shielding measures in places subject to:
- Disturbance caused by static electricity
- Strong electric field or strong magnetic field
- Radioactive rays

3.1 Servo System Wiring

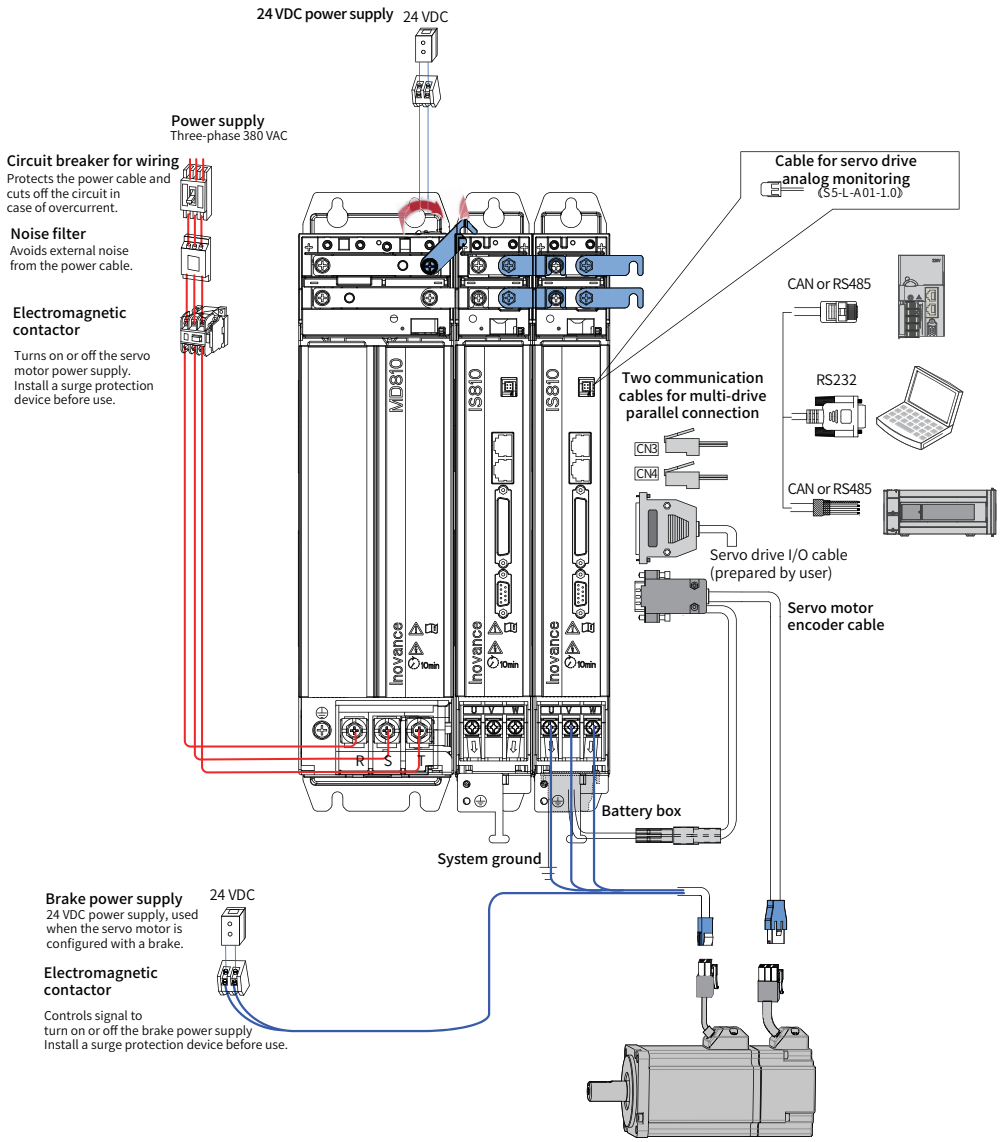

Figure 3-1 Wiring of three-phase 380 V system

The servo drive is directly connected to an industrial power supply, with no isolation such as a transformer. In this case, connect a fuse or a circuit breaker to the input power supply to prevent cross electric shock. Connect a residual current device (RCD) against both overload and short circuit or a specialized RCD combined with protective grounding to enhance system safety.

Do not use the electromagnetic contactor to run or stop the servo motor. The servo motor, as a high-inductance device, may generate an instantaneous high voltage which may damage the contactor.

Ensure sufficient power capacity when connecting an external control power supply or a 24 VDC power supply, especially when using the power supply to power multiple servo drives or brakes. Insufficient power capacity will lead to insufficient supply current, resulting in failure of the servo drive or brake. The brake must be powered up by a 24 VDC power supply. The power must match the motor model and meet the brake power requirements.

3.2 Terminals of Power Supply Unit

Prepare an MD810 series power supply unit before using this product. For specifications of the related power supply unit, see the MD810 Series Standard Drive (Multidrive System) Advanced User Guide.

3.3 Terminals of Drive Unit

3.3.1 Arrangement of Drive Unit Terminals

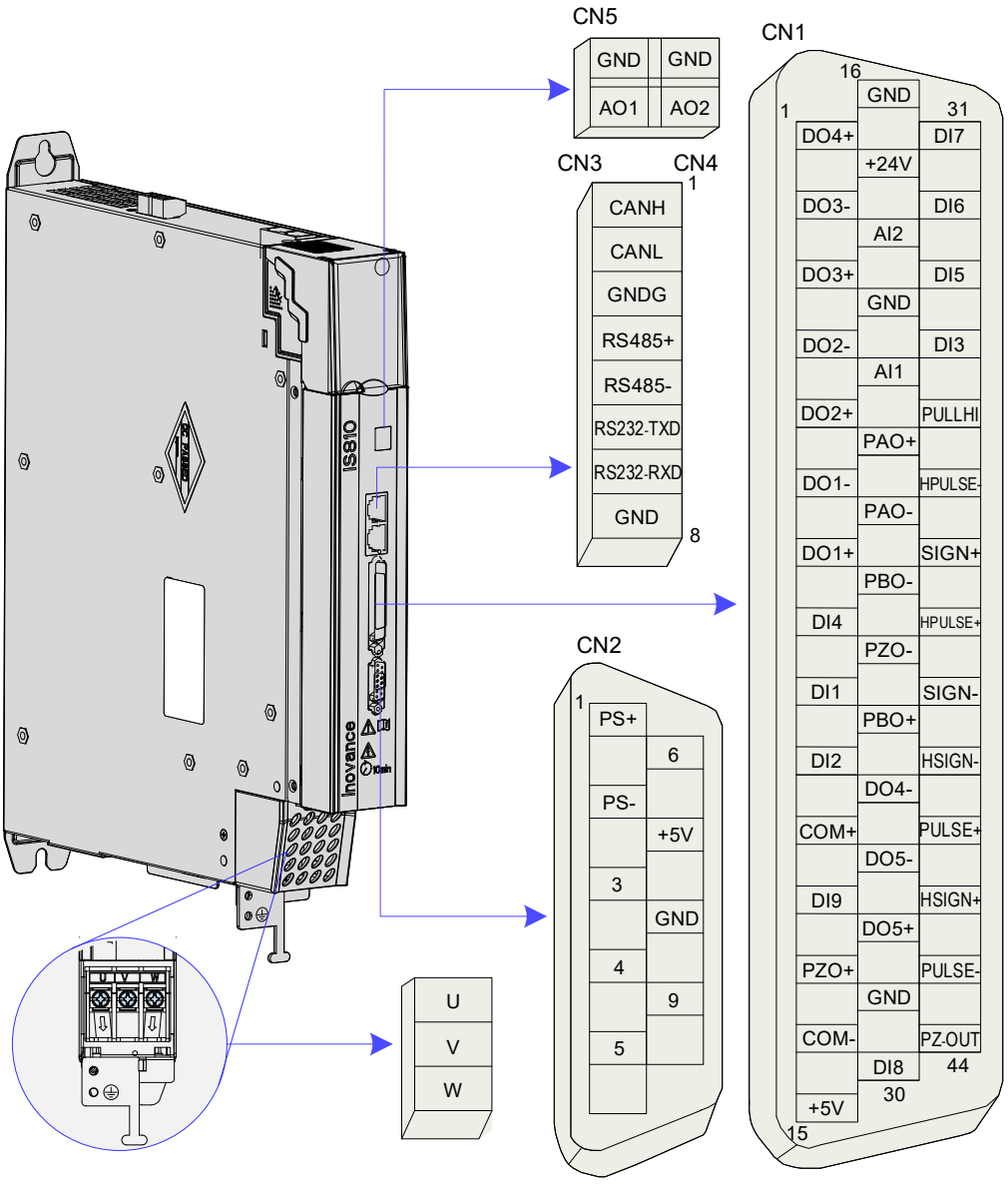

Figure 3-2 Terminal arrangement in a drive unit

The preceding figure shows arrangement of the terminals in the servo drive.

3.3.2 Functions of Drive Unit Terminals

Table 3-1 Terminal names and functions

Terminal Symbol	Terminal Name	Terminal Function
+, –	Main circuit power input terminals	Used for bus input
U, V, W	Servo motor connection terminals	Connected to U, V, and W phases of the servo motor
PE	Grounding	Two PE terminals connected to those of the power supply and the servo motor, respectively
CN1	Control signal terminal	–
24 V/COM	24 V power supply terminal	External 24 V control power and brake power input terminals

3.4 Connection Between Power Supply Unit and Drive Unit

3.4.1 Connection Through DC Bus

Remove the operating panel cover of the drive unit. Connect the power supply unit to the drive unit with the DC busbar.

Note!

The pre-installed connector (busbar) is used for electrical connection of the device. Connection using a lead wire cannot guarantee the running stability and safety of the device.

Connecting Busbars
(1) Loosen the screw of the keypad. Remove the cover and keypad, as shown in the following figure. 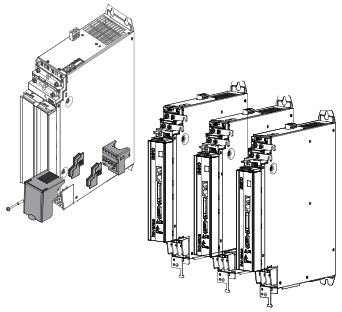 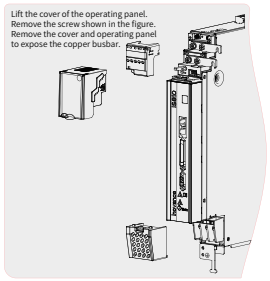
Note! Power off the drive at least 10 minutes before removing the cover.

(2) Loosen (not remove) the screw on the DC busbar. Turn over the DC busbar to connect it to the next device.

Note: For the 50 mm wide model, the busbar is not pre-installed on the device. Instead, it is contained in the packing box. In this case, remove the busbar terminal screws before installing the busbar.

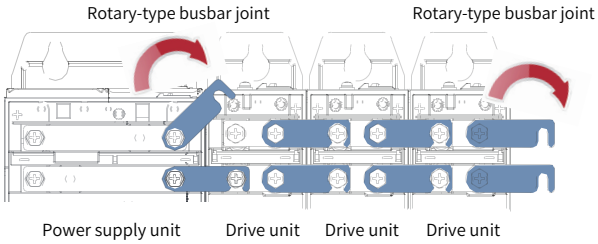

(3) Tighten the screws. Calibrate the torque of all screws. The recommended torque is 2.6 N · m to 3 N · m.

3.4.2 PE Connection Diagram

Properly ground every device in the system. Connect the power supply unit, drive unit, and components such as the filter and reactor to the PE copper busbar in the cabinet using the star connection method, as shown in the following figure.

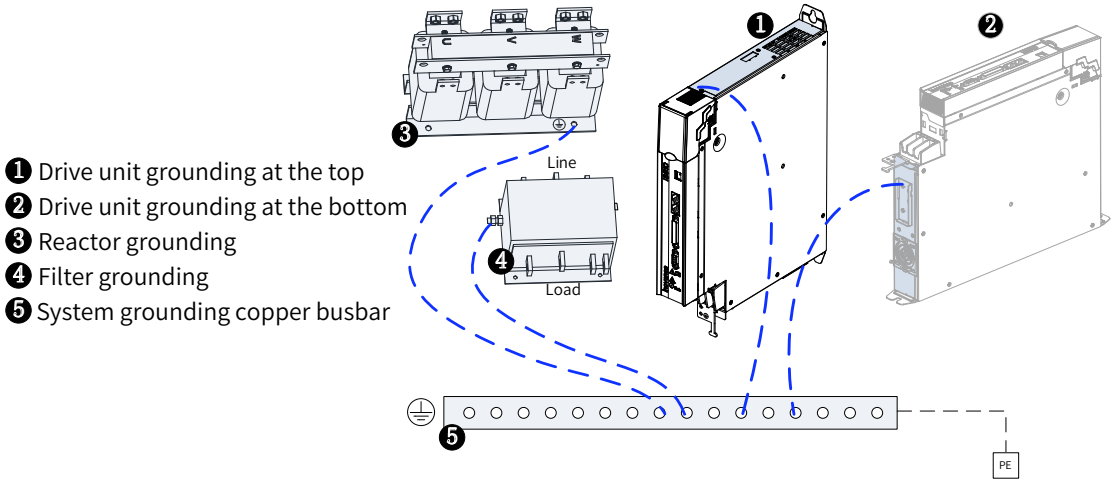

Note: Both the top and bottom of a drive unit must be grounded. ① and ② in the diagram indicate the two grounding points of the drive unit.

3.4.3 24 V Control Power Supply

The power supply of the drive unit is divided into the control part and the power part. The control part is preferably powered through the DC busbar that is connected to the power supply unit. It is recommended to connect the 24 V switched-mode power supply of the drive unit to an external power supply. This ensures that the power supply to the control part of the drive unit is not affected after stop upon faults of the power supply unit.

Note that the 24 V terminal of the drive unit must be correctly connected, as shown in the following figure.

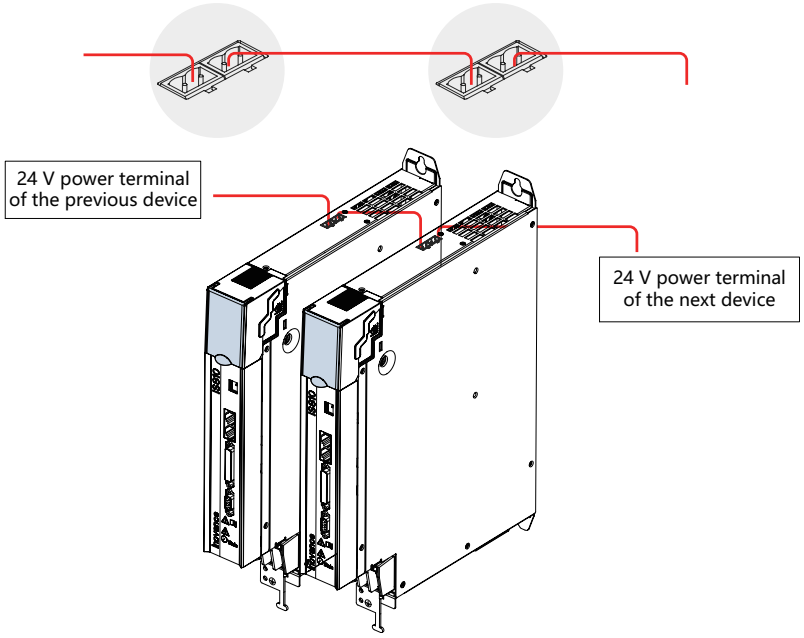
24 V power terminal
of the previous device
24 V power terminal
of the next device

3.5 Main Circuit Wiring of Servo Drive

3.5.1 Recommended Models and Specifications of Main Circuit Cables

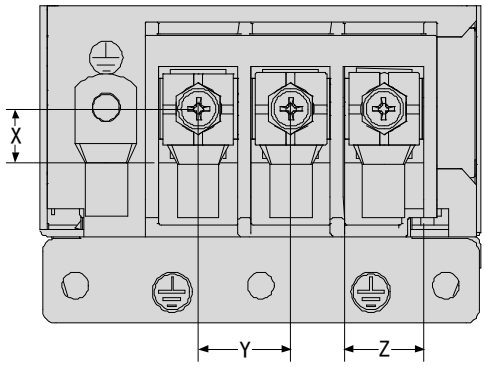

Figure 3-3 Terminal block

Table 3-2 Structural data of terminal block

No.	Drive Model	U, V, W		PE	
		mm^2	AWG	mm^2	AWG
Three-phase 380 V					
1	T005	3 x 0.75	18	0.75	18
2	T009	3 x 1.5	16	1.5	16
3	T013	3 x 1.5	16	1.5	16
4	T017	3 x 4.0	12	4	12
5	T025	3 x 4.0	12	4	12
6	T032	3 x 4.0	12	4	12
7	T075	3 x 16	5	16	5
8	T091	3 x 16	5	16	5
9	T112	3 x 25	3	25	3
10	T150	3 x 50	1/0	50	1/0

Structure	Main Circuit Terminal					PE Terminal	
	X (mm)	Y (mm)	Z (mm)	Screw	Tightening Torque (N·m)	Screw Size	Tightening Torque (N·m)
22 kW to 37 kW	12	21	18	M6 SEMS screw	6	M6	6
45 kW to 75 kW	16.5	33	30	M10 SEMS screw	25	M10	25

3.5.2 Cable Lug Selection

Recommended cable lugs are shown below.



GTNR series



TNR series



TNS series

Appearance of cable lugs manufactured by Suzhou Yuanli Metal Enterprise Co., Ltd

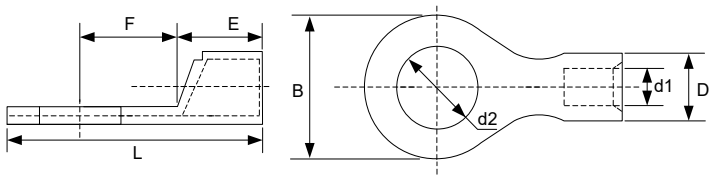

Figure 3-4 Dimensions of TNR series cable lugs

Table 3-3 Models and dimensions of TNR series cable lugs

Model	Cable Size		D	d1	E	F	B	d2	L	Current (A)	Crimping Tool
	AWG/MCM	mm^2									
TNR0.75-4	22 to 16	0.25 to 1.0	2.8	1.3	4.5	6.6	8.0	4.3	15.0	10	RYO-8
TNR1.25-4	22 to 16	0.25 to 1.65	3.4	1.7	4.5	7.3	8	5.3	15.8	19	AK-1M

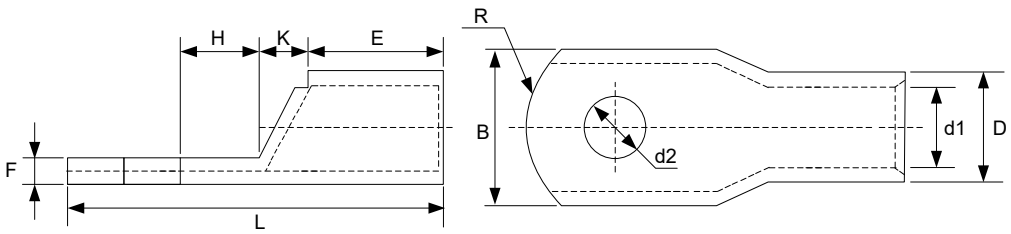

Figure 3-5 Dimensions of GTNR series cable lugs

Table 3-4 Models and dimensions of GTNR series cable lugs (unit: mm)

Model	D	d1	E	H	K	B	d2	F	L	R	Crimping Tool
GTNR1.5-5	4.0	2.2	5.0	5.0	2.0	8.0	5.3	1.0	16.0	5	RYO-8 YYT-8 RYO-14
GTNR2.5-4	4.5	2.9	7.0	5.0	2.0	8.0	4.3	1.0	18.0		
GTNR2.5-5				6.0			5.3		20.0	7	
GTNR2.5-6						10.2	6.4	0.8			
GTNR4-5	5.2	3.6	7.0	6.0	2.0	10.0	5.3	1.0	20.0		
GTNR4-6							6.4				
GTNR6-5	6.0	4.2	9.0	6.0	3.0	10.0	5.3	1.2	23.0		
GTNR6-6				7.5			6.4		26.0		
GTNR6-8						12.0	8.4	1.0			
GTNR10-6	7.0	5.0	9.0	8.0	3.5	12.4	6.4	1.3	26.5		
GTNR10-8							8.4		27.5		
GTNR16-6	7.8	5.8	12.0	8.0	4.0	12.4	6.4	1.3	31.0		CT-38 CT-100
GTNR16-8							8.4				
GTNR25-6	9.5	7.5	12.0	8.0	4.5	14.0	6.4	2.0	32.0	10	
GTNR25-8				9.0		15.5	8.4	1.6	34.0		
GTNR25-10				10.5		17.5	10.5	1.4	37.0		
GTNR35-6	11.4	8.6	15.0	9.0	5.0	15.5	6.4	2.8	38.0		
GTNR35-8							8.4				
GTNR35-10				10.5		17.5	10.5	2.5	40.5		
GTNR50-8	12.6	9.6	16.0	11.0	6.0	18.0	8.4	2.8	43.5		CT-100
GTNR50-10							10.5				
GTNR70-8	15.0	12.0	18.0	13.0	7.0	21.0	8.4	2.8	50.0	14	
GTNR70-10							10.5				
GTNR70-12							13.0				
GTNR95-10	17.4	13.5	20.0	13.0	9.0	25.0	10.5	3.9	55.0		
GTNR95-12							13.0				
GTNR120-12	19.8	15.0	22.0	14.0	10.0	28.0	13.0	4.7	60.0	16	RYC-150
GTNR120-16				16.0			17.0		64.0		
GTNR150-12	21.2	16.5	26.0	16.0	11.0	30.0	13.0	4.7	69.0	24	
GTNR150-16							17.0				
GTNR185-16	23.5	18.5	32.0	17.0	12.0	34.0	17.0	5.0	78.0		
GTNR240-16	26.5	21.5	38.0	20.0	14.0	38.0	17.0	5.5	92.0		
GTNR240-20							21.0				

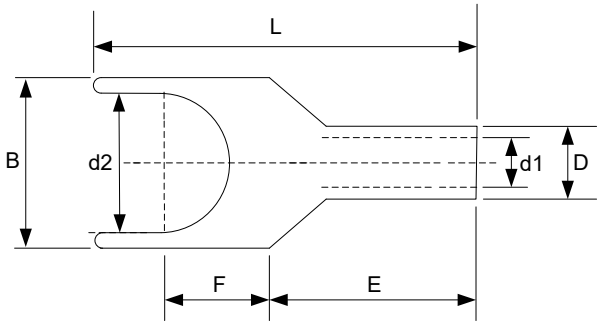

Figure 3-6 Dimensions of TNS series cable lugs

Table 3-5 Models and dimensions of TNS series cable lugs (unit: mm)

Model	D	d1	E	H	K	B	d2	F	L	R	Crimping Tool
TNS1.5-5	4.0	2.2	5.0	5.0	2.0	8.0	5.3	1.0	16.0	5	RYO-8 YYT-8 RYO-14
TNS2.5-4	4.5	2.9	7.0	5.0	2.0	8.0	4.3	1.0	18.0		
TNS2.5-5				6.0			5.3		20.0	7	
TNS2.5-6						10.2	6.4	0.8			
TNS4-5	5.2	3.6	7.0	6.0	2.0	10.0	5.3	1.0	20.0		
TNS4-6							6.4				
TNS6-5	6.0	4.2	9.0	6.0	3.0	10.0	5.3	1.2	23.0		
TNS6-6				7.5			6.4		26.0		
TNS6-8						12.0	8.4	1.0			
TNS10-6	7.0	5.0	9.0	8.0	3.5	12.4	6.4	1.3	26.5		
TNS10-8							8.4		27.5		
TNS16-6	7.8	5.8	12.0	8.0	4.0	12.4	6.4	1.3	31.0		CT-38 CT-100
TNS16-8							8.4				
TNS25-6	9.5	7.5	12.0	8.0	4.5	14.0	6.4	2.0	32.0	10	
TNS25-8				9.0		15.5	8.4	1.6	34.0		
TNS25-10				10.5		17.5	10.5	1.4	37.0		
TNS35-6	11.4	8.6	15.0	9.0	5.0	15.5	6.4	2.8	38.0		
TNS35-8							8.4				
TNS35-10				10.5		17.5	10.5	2.5	40.5		
TNS50-8	12.6	9.6	16.0	11.0	6.0	18.0	8.4	2.8	43.5		CT-100
TNS50-10							10.5				
TNS70-8	15.0	12.0	18.0	13.0	7.0	21.0	8.4	2.8	50.0	14	
TNS70-10							10.5				
TNS70-12							13.0				
TNS95-10	17.4	13.5	20.0	13.0	9.0	25.0	10.5	3.9	55.0		
TNS95-12							13.0				
TNS120-12	19.8	15.0	22.0	14.0	10.0	28.0	13.0	4.7	60.0	16	RYC-150
TNS120-16				16.0			17.0		64.0		
TNS150-12	21.2	16.5	26.0	16.0	11.0	30.0	13.0	4.7	69.0	24	
TNS150-16							17.0				
TNS185-16	23.5	18.5	32.0	17.0	12.0	34.0	17.0	5.0	78.0		
TNS240-16	26.5	21.5	38.0	20.0	14.0	38.0	17.0	5.5	92.0		
TNS240-20							21.0				

3.6 Connection Between Drive Unit and Motor

3.6.1 Grounding Requirements

Properly ground the PEs of the servo drive and servo motor.

3.6.2 Connection with MS1 Series Motor

1 Power cable connection

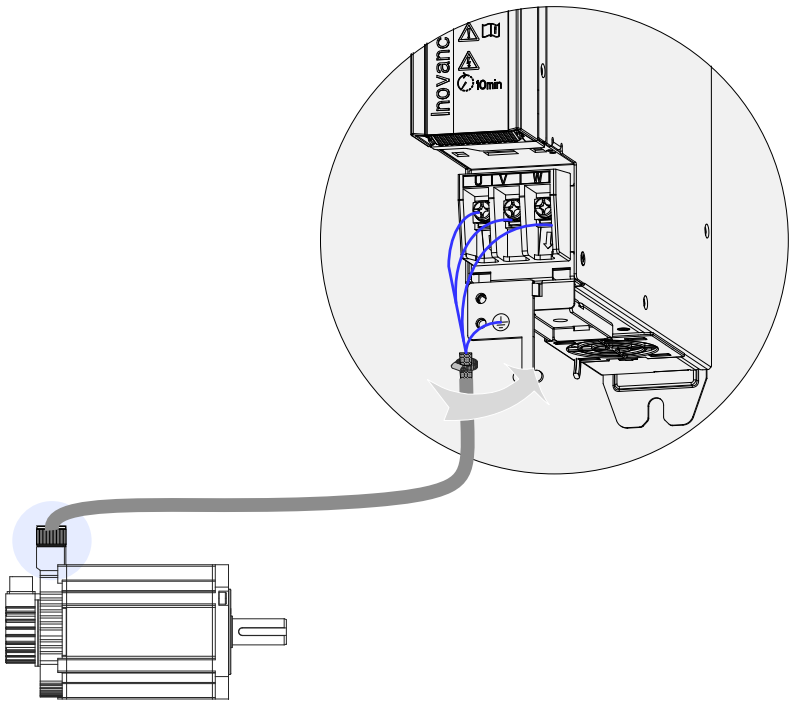

Figure 3-7 Example wiring of power cables between servo drive and servo motor

Table 3-6 Power cable connectors on the servo motor side

Flange Size of Applicable Motor[1]	Connector Appearance	Pin Arrangement		
		Pin No.	Signal	Color
Terminal-type motor: 40 60 80	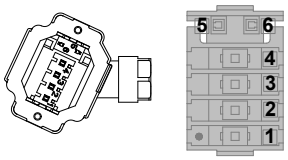 Black 6-pin connector	1	PE	Yellow/green
		2	W	Red
		3	V	Black
		4	U	White
		5	Brake (polarity insensitive)	Brown
		6		Blue

Table 3-7 Power cable connector (motor side) of lead-type motor

Flange Size of Applicable Motor[1]	Connector Appearance	Pin Arrangement		
		Pin No.	Signal	Color
Lead-type motor: 40 60 80	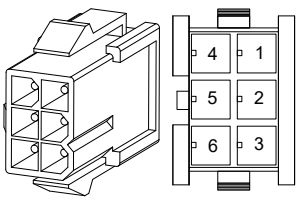 Black 6-pin connector	1	U	White
		2	V	Black
		4	W	Red
		5	PE	Yellow/green
		3	Brake (polarity insensitive)	Brown
		6		Blue

Table 3-8 Power cable connector (servo motor side)

Flange Size of Applicable Motor[1]	Connector Appearance	Pin Arrangement		
		Pin No.	Signal	Color
100 130	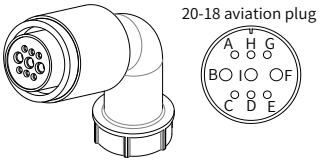 3108E20-18S military-specification aviation plug of MIL-DTL-5015 series	B	U	Blue
		I	V	Black
		F	W	Red
		G	PE	Yellow/green
		C	Brake (polarity insensitive)	-
		E		-

Table 3-9 Power cable connector (servo motor side)

Flange Size of Applicable Motor[1]	Connector Appearance	Pin Arrangement		
		Pin No.	Signal	Color
180	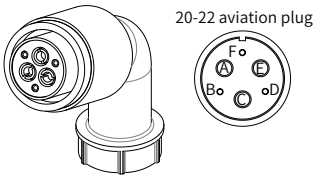 3108E20-22S military-specification aviation plug of MIL-DTL-5015 series	A	U	Blue
		C	V	Black
		E	W	Red
		F	PE	Yellow/green
		B	Brake (polarity insensitive)	-
		D		-

NOTE

◆ The flange size refers to the width of the mounting flange.

◆ Power cable colors are subject to the actual product. Cable colors mentioned in this guide apply to Inovance cables.

2 Absolute encoder connection

■ Installation of the battery box for the absolute encoder

The battery box (model: SV82-C4) is optional and includes:

① One plastic box

② One battery (3.6 V, 2600 mAh)

③ Two M3x10 flat-head screws

④ One M3x10 pan-head screw

⑤ Terminal block and crimping terminal

1) Installing the battery box

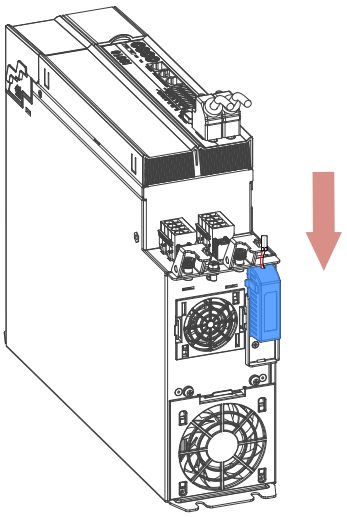

Figure 3-8 Installation of the battery box for absolute encoder (SIZE2, bottom view)

① Fix the battery box with two flat-head screws.

② The flat-head screws correspond to the flat-head slots.

2) Removing the battery box

The battery may leak its liquid after long-term use. Replace the battery every two years. Remove the battery box in steps reverse to the installation steps.

Do not pinch the connector cable when closing the battery box cover.

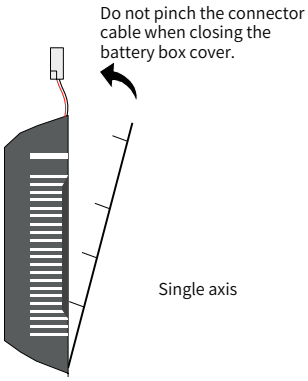

Note: Improper use of the battery may result in battery leakage which will corrode the components or cause the battery to explode. Abide by the following requirements during use:

① Install the battery in the correct +/– polarity.

② Leaving a battery that has been used for a long time or is no longer useful inside the device can cause battery leakage. The electrolyte inside the battery is highly corrosive and conductive, which not only corrodes surrounding components but also gives rise to the danger of short circuit. Replace the battery periodically (recommended period: once every two years).

③ Do not disassemble the battery because the internal electrolyte may spread out and cause physical injuries.

④ Do not throw a battery into the fire or heat up the battery. Failure to comply may cause an explosion.

⑤ Prevent battery short circuit. Do not strip the battery tube. If terminals + and – of the battery come into contact with metals, a large current will be generated, which will deteriorate the battery power and even incur the risk of explosion due to violent overheating.

⑥ This battery is not rechargeable.

⑦ Dispose of the retired battery according to local regulations.

3) Selecting a battery

Select an appropriate battery according to the following table.

Table 3-10 Description of absolute encoder batteries

Battery Specifications	Item and Unit	Ratings			Requirement
		Min.	Typical	Max.	
Output: 3.6 V, 2500 mAh Recommended manufacturer and model: Shenzhen Jieshun, LS14500	External battery voltage (V)	3.2	3.6	5	In standby state
	Circuit fault voltage (V)	-	2.6	-	In standby state
	Battery alarm voltage (V)	2.85	3	3.15	-
	Current consumed by the circuit (μA)	-	2	-	During normal operation
		-	10	-	In standby state, shaft at a standstill
		-	80	-	In standby state, shaft rotating
	Operating temperature (°C)	0	-	40	Same as the motor
	Storage temperature (°C)	–20	-	60	

The preceding values are obtained under an ambient temperature of 20°C.

Note:

- The "normal operation" means that the absolute encoder supports single-turn or multi-turn data counting and transmission. Power on the servo drive after connecting the absolute encoder properly. The encoder starts data transmission after a short delay of about 5s after power-on. The motor speed must be lower than or equal to 10 RPM during transition from the standby state to the normal operation state (upon power-on). Otherwise, E740.0 (Encoder fault) may be reported. In this case, power off and power on the servo drive again.
- The "standby state" means that the encoder performs multi-turn counting by using the power from an external battery when the servo drive power supply is off. In this case, data transmission stops.

4) Battery design life

The following calculation only takes into account the current consumed by the encoder and does not cover the current consumed by the battery.

In the following table, T1 represents the duration in which the drive works normally per day. T2 represents the duration in which the motor rotates after the drive is powered off. T3 represents the duration in which the motor stops after power-off [unit: hour (h)].

Example:

Table 3-11 Design life of the absolute encoder battery

Item	Schedule 1	Schedule 2
Working days in different operating conditions per year	313	52
T1 (h)	8	0
T2 (h)	0.1	0
T3 (h)	15.9	24

Capacity consumed per year = (8 h x 2 μA + 0.1 h x 80 μA + 15.9 h x 10 μA) x 313 + (0 h x 2 μA + 0 h x 80 μA + 24 h x 10 μA) x 52 ≈ 70 mAH

Design life = Battery capacity/Capacity consumed per year = 2600 mAH/70 mAH = 37.1 years

■ Wiring of battery box and signal cables for the absolute encoder

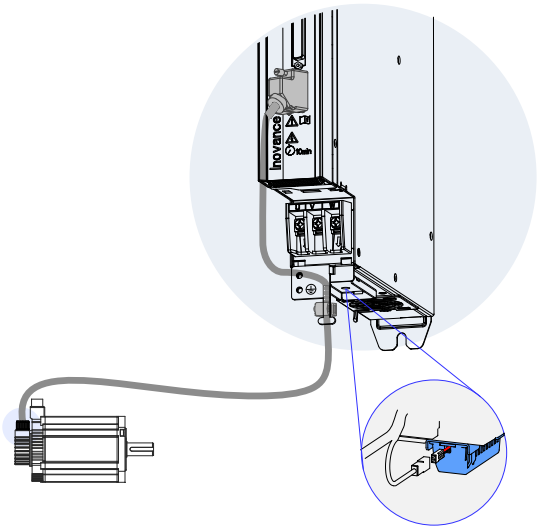

Figure 3-9 Example wiring of battery box and signal cables for the absolute encoder

Color coding of lead wires of the battery box:

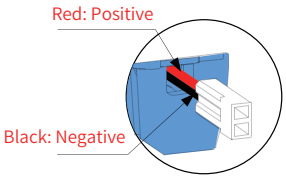

Figure 3-10 Lead wires of the absolute encoder battery

Store the encoder under required ambient temperature and with its battery securely connected and adequately charged. Failure to comply may cause the encoder to lose the position information.

Table 3-12 Encoder cable connector of terminal-type motor encoder (9-pin connector)

Flange Size of Applicable Motor[1]	Connector Appearance		Pin Arrangement			
			Pin No.	Signal	Color	Type
Terminal-type motor: 40 60 80	Servo drive side	DB9 male	1	PS+	Blue	Twisted pair
			2	PS–	Purple	
			7	+5 V	Red	Twisted pair
			8	0 V	Orange	
			Enclosure	PE	-	-
	Motor side	7-pin connector	1	PS+	Blue	Twisted pair
			2	PS–	Purple	
			3	DC+	Brown	Twisted pair
			4	DC–	Black	
			5	+5 V	Red	Twisted pair
			6	0 V	Orange	
			7	PE	-	-

NOTE

[1] The flange size refers to the width of the mounting flange.

Table 3-13 Encoder cable connector of lead-type motor (9-pin connector)

Flange Size of Applicable Motor[1]	Connector Appearance			Pin Arrangement			
				Pin No.	Signal	Color	Type
Lead-type motor: 40 60 80	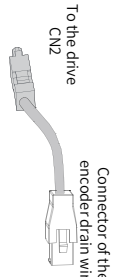	Servo drive side	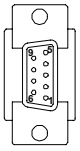 DB9 male	1	PS+	Blue	Twisted pair
				2	PS–	Purple	
				7	+5 V	Red	Twisted pair
				8	0 V	Orange	
				Enclosure	PE	-	-
		Motor side	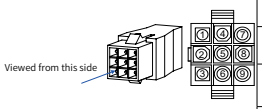 9-pin connector Recommended: Plastic enclosure: AMP172161-1 Terminal: AMP 770835-1	1	Battery+	Brown	Twisted pair
				4	Battery–	Black	
				3	PS+	Blue	Twisted pair
				6	PS–	Purple	
				9	+5 V	Red	Twisted pair
				8	GND	Orange	
				7	Shield	-	-

NOTE

[1] The flange size refers to the width of the mounting flange.

Table 3-14 Encoder cable connector of lead-type motor (9-pin connector)

Flange Size of Applicable Motor[1]	Connector Appearance			Pin Arrangement			
				Pin No.	Signal	Color	Type
100 130 180	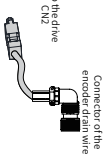	Servo drive side	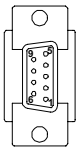 DB9 male	1	PS+	Blue	Twisted pair
				2	PS–	Purple	
				7	+5 V	Red	Twisted pair
				8	0 V	Orange	
				Enclosure	PE	-	-
		Motor side	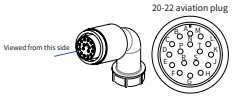 9-pin connector Recommended: Plastic enclosure: AMP172161-1 Terminal: AMP 770835-1	A	PS+	Blue	Twisted pair
				B	PS–	Purple	
				E	Battery+	Brown	Twisted pair
				F	Battery–	Black	
				G	+5 V	Red	Twisted pair
				H	GND	Orange	
				J	Shield	-	-

NOTE

[1] The flange size refers to the width of the mounting flange.

Table 3-15 Pin connection of 20-bit or 23-bit encoder cables of the IS810P series servo motor

DB9 at Drive Side		Function	Motor Side	
			9-pin	20-29 Aviation Plugs
Signal	Pin No.		Pin No.	Pin No.
PS+	1	Serial communication signal +	3	A
PS–	2	Serial communication signal –	6	B
+5 V	7	Encoder +5 V power supply	9	G
GND	8	Grounding terminal of encoder +5 V power supply	8	H
PE	Enclosure	Shield	7	J

It is recommended to use 22 AWG to 26 AWG cables and matching terminals AMP170359-1 for 10B, 20B, 40B, and 75B series motors. If the cable needed exceeds the allowable length, increase the cross-sectional area of the cable as appropriate. For details, see the following figure:

Table 3-16 Recommended cable specifications

Cable Size	Ω/km	Allowable Cable Length (m)
26 AWG (0.13 mm^2)	143	10.0
25 AWG (0.15 mm^2)	89.4	16.0
24 AWG (0.21 mm^2)	79.6	18.0
23 AWG (0.26 mm^2)	68.5	20.9
22 AWG (0.32 mm^2)	54.3	26.4

If cables above 22 AWG are required, contact Inovance sales personnel.

3.6.3 Connection with ISMG Series Motor

1 Power cable connection

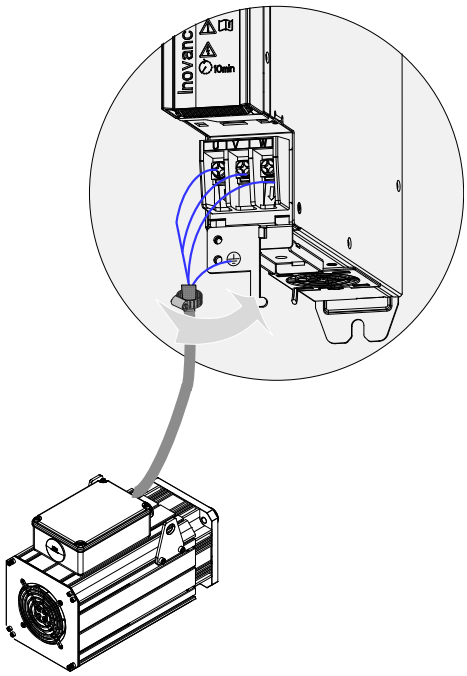

Figure 3-11 Example of connection between drive unit output and ISMG series motor

Sizes and wiring of external main circuit cables must comply with local regulations and related IEC requirements.

Do not connect any capacitor or surge protection device at the output side of the drive. Failure to comply may result in frequent triggering of the protection mechanism or even damage to the drive.

An excessively long motor cable may result in electrical resonance due to the distributed capacitance. The electrical resonance may in turn damage motor insulation or cause high leakage current, triggering the overcurrent protection mechanism of the drive. To avoid these problems, install an AC output reactor close to the drive when the motor cable length exceeds 100 m.

Use shielded cables for motor output. Use a grounding bracket of cable shield to achieve all-round connection with the shield, and crimp the drain wire of the shield to the PE terminal.

For the motor cable shield, use the shortest possible drain wire with a width no less than one-fifth of its length.

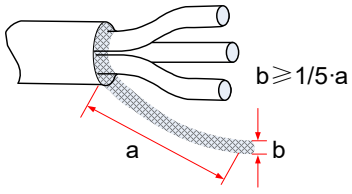

Figure 3-12 Drain wire of the motor cable shield

Grounding terminal (PE)

Ground the PE terminal properly. The resistance value of the PE cable must be less than 10 Ω. Failure to comply may result in device fault or damage.

Do not connect the PE terminal to the N terminal for the neutral wire of the power supply.

Use a yellow and green cable to connect the protective grounding conductor.

Ground the main circuit shield at appropriate positions.

Install the drive on a conductive metal mounting surface. Ensure that the whole conductive bottom of the drive is attached properly to the mounting surface.

Install the filter and drive on the same mounting surface to ensure the filtering effect.

2 Encoder cable connection

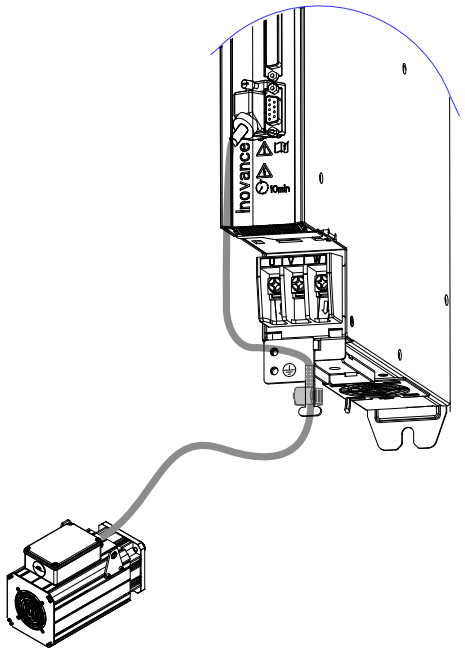

Figure 3-13 Example wiring of encoder signal cables

Table 3-17 Connectors of encoder cables on the servo drive side

Connector Appearance	Pin Arrangement	
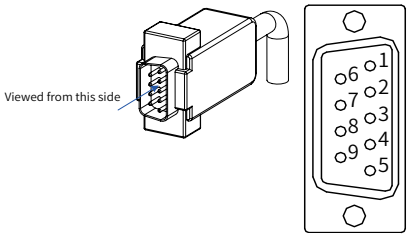	Pin No.	Signal
	1	PS+
	2	PS–
	5	PTC+
	6	PTC–
Recommended:	7	+5 V
Plastic enclosure of the plug on the cable side: SZTDK DB9P, black case	8	GND
Core: SZTDK DB9P soldering plug, blue	Enclosure	PE

Table 3-18 Connectors of encoder cables on the servo motor side

Connector Appearance	Pin Arrangement		
3108E20-29S military-specification aviation plug of MIL-DTL-5015 series 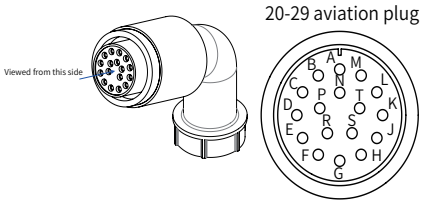	Pin No.	Signal	-
	A	PS+	Twisted pair
	B	PS–	
	G	+5 V	Twisted pair
	H	GND	
	J	Shield	
	K	PTC+	Twisted pair
	L	PTC–	

Table 3-19 Pin relationship of encoder cables

Servo drive side			Function	20-29 Aviation Plugs on Motor Side
Terminal	Signal	Pin No.		Pin No.
CN2	PS+	1	Serial communication signal +	A
	PS–	2	Serial communication signal –	B
	+5 V	7	Encoder +5 V power supply	G
	GND	8	Grounding terminal of encoder +5 V power supply	H
	PE	Enclosure	Shield	J
CN1	DO5+	28	PTC+	K
	DO5–	27	PTC–	L

3 Precautions for wiring of encoder signal cables

Ground the shield of the encoder cable on both the drive side and the motor side. Otherwise, the drive may report false alarms.

It is recommended to use a shielded twisted-pair cable sized 16 AWG to 26 AWG. The differential signals must be connected to two corresponding core wires in the twisted-pair cable. The wiring length must be as short as possible.

Do not connect cables to "reserved" terminals.

When determining the length of the encoder cable, take full account the voltage drop caused by cable resistance and signal attenuation caused by distributed capacitance. Use shielded twisted pairs thicker than 26 AWG (as per UL2464 standard) and keep the length within 10 m. For a greater length, use thicker cables, as described in the following figure.

Table 3-20 Recommended cable specifications

Cable Size	Ω/km	Allowable Cable Length (m)
26 AWG (0.13 mm^2)	143	10.0
25 AWG (0.15 mm^2)	89.4	16.0
24 AWG (0.21 mm^2)	79.6	18.0
23 AWG (0.26 mm^2)	68.5	20.9
22 AWG (0.32 mm^2)	54.3	26.4
21 AWG (0.41 mm^2)	42.7	33.5

When determining the length of the encoder cable, take full account the voltage drop caused by cable

resistance. Pay attention to the power capacity during power distribution to ensure that the strength of signals and power arriving at the drive input side is sufficient. Shielded twisted-pair cables thicker than 26 AWG are recommended.

The encoder cable and power cable must be separated by at least 30 cm.

If the encoder cable is too short and an extension cable is required, ensure the shields of two separate cables are well connected to ensure reliable shielding and grounding.

4 ISMG motor temperature detection

Note: PTC temperature detection is not available in models IS810P T025 and below. If you need this function, contact Inovance sales personnel for customization.

5 Motor fan wiring

The motor fan uses a single-phase 220 V input power supply, of which the PE terminal must be grounded. Wire the fan cable according to the following figure.

Note! Do not connect the fan power cable to a three-phase power supply. Failure to comply may result in fan damage.

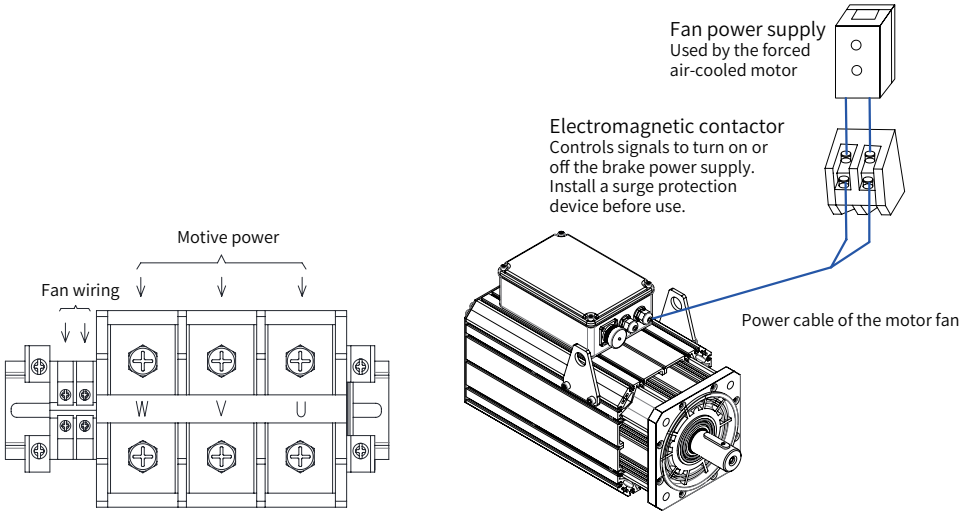

3.7 Connection of Control Signal Terminals

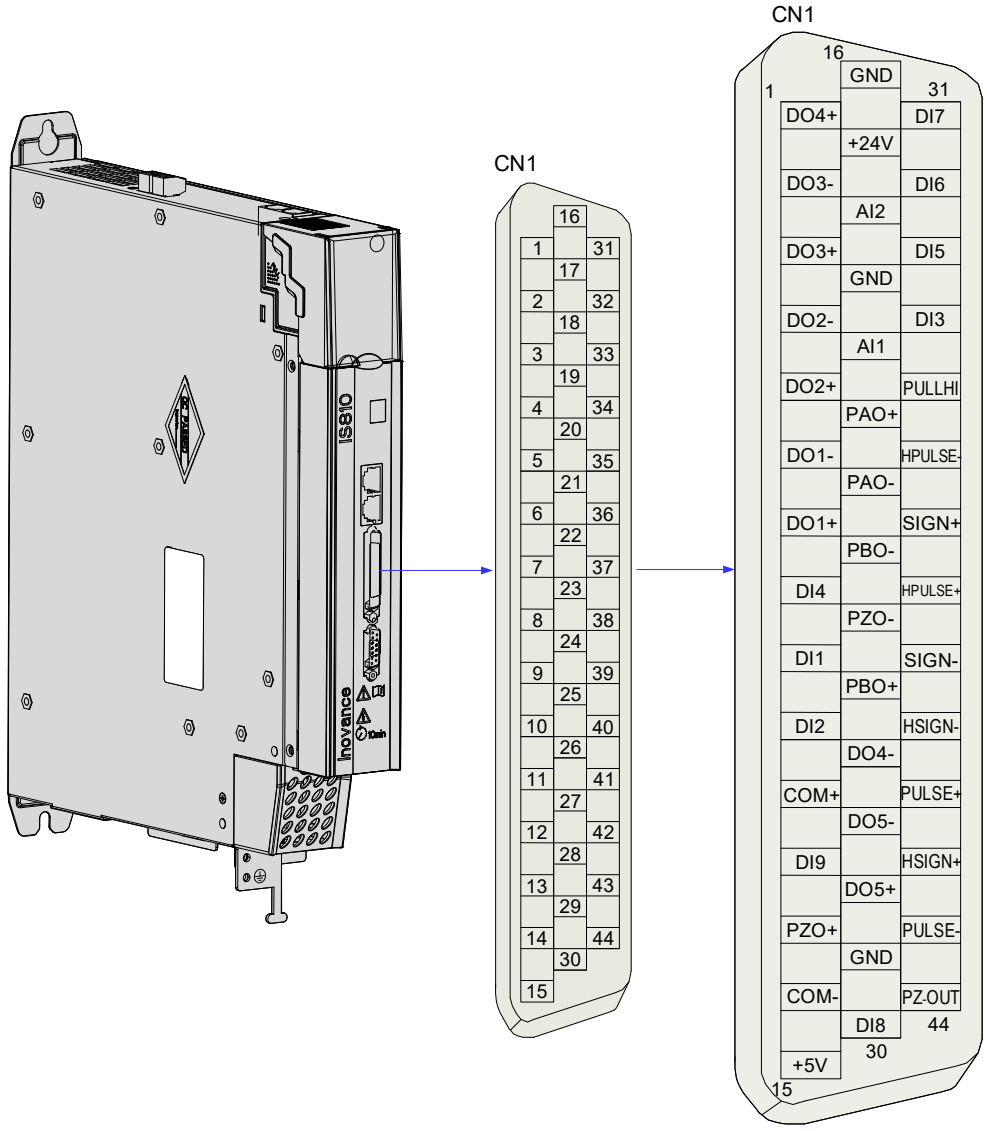

Figure 3-14 Pin arrangement of drive control circuit terminal connector

CN1 terminal:
Plastic housing of the plug on the cable side: DB25P (SZTDK), black
Core: HDB44P bonding wire, male (SZTDK)

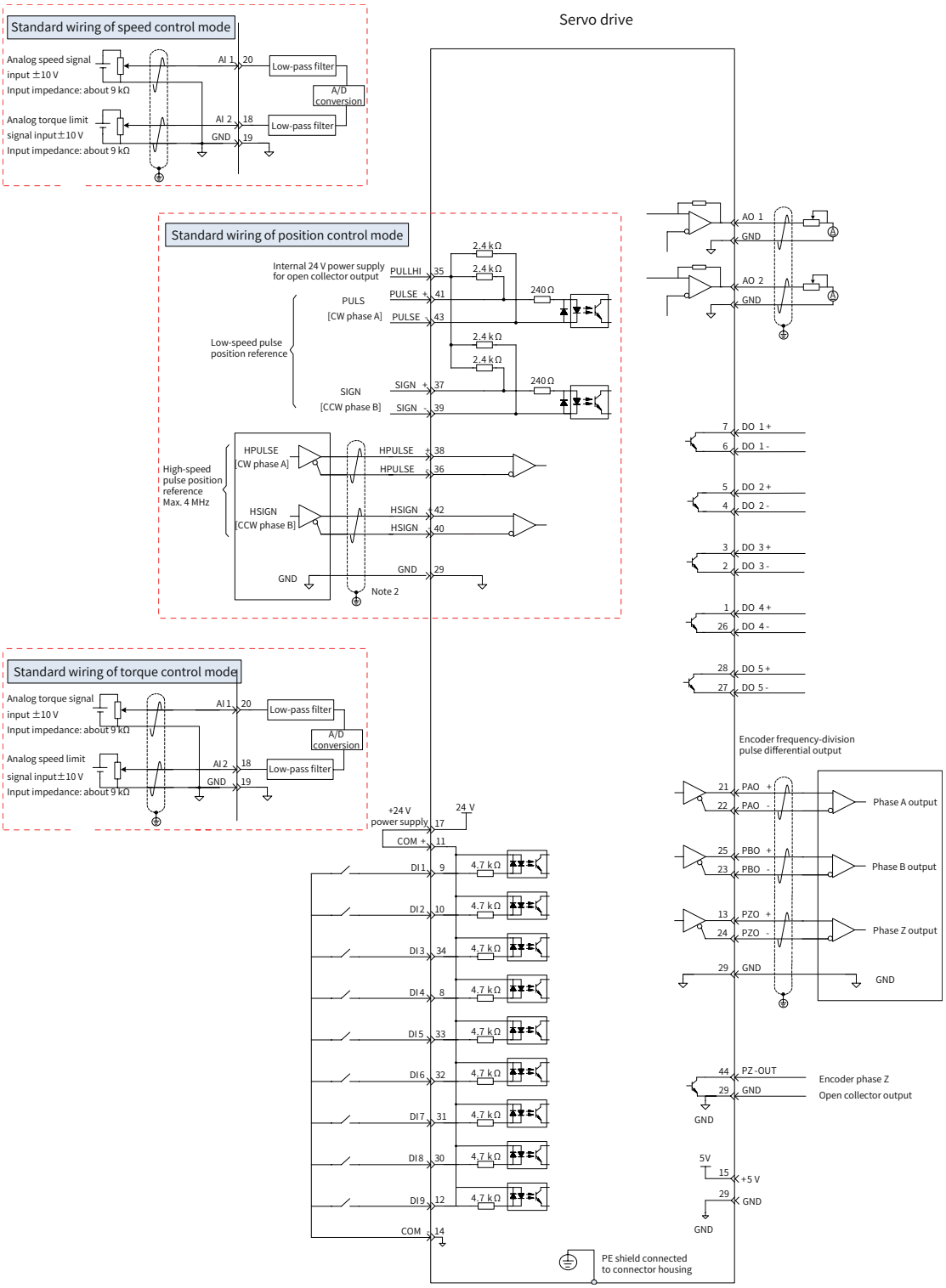

Figure 3-15 Example wiring of three control modes

3.7.1 Position Reference Input Signals

The following describes terminals of the user interface connector used for ordinary and high-speed reference pulse input signals and reference sign input signals.

Table 3-21 Description of position reference input signals

Signal		Pin No.	Function	
Position reference	PULSE+	41	Low-speed pulse reference input mode: Differential drive input Open collector	Input pulse format: Direction + Pulse Phase A/B quadrature pulse CW/CCW pulse
	PULSE–	43		
	SIGN+	37		
	SIGN–	39		
	HPULSE+	38	High-speed pulse input reference	
	HPULSE–	36		
	HSIGN+	42	High-speed position reference signs	
	HSIGN–	40		
	PULLHI	35	External power input terminal of reference pulse	
	GND	29	Signal ground	

Reference pulses and signs on the host controller side can be output through the differential drive or open collector. The following table lists the maximum input frequency and minimum pulse width of these output modes.

Table 3-22 Correspondence between pulse input frequency and pulse width

Pulse Mode		Max. Frequency (pps)	Min. Pulse Width (μs)
Ordinary	Differential	500 k	1
	Open collector	200 k	2.5
High-speed differential		4 M	0.125

1 Low-speed pulse reference input

1) Differential drive mode

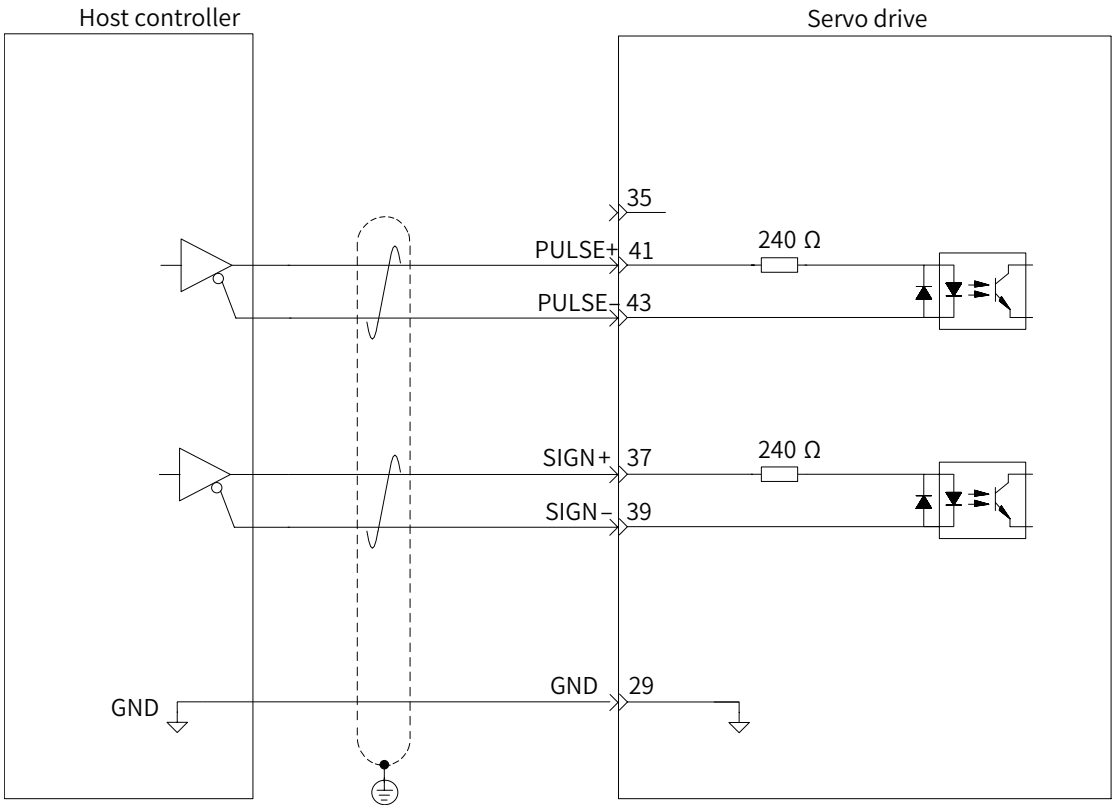

2) Open-collector mode

(a) If the internal 24 V power supply of the servo drive is used:

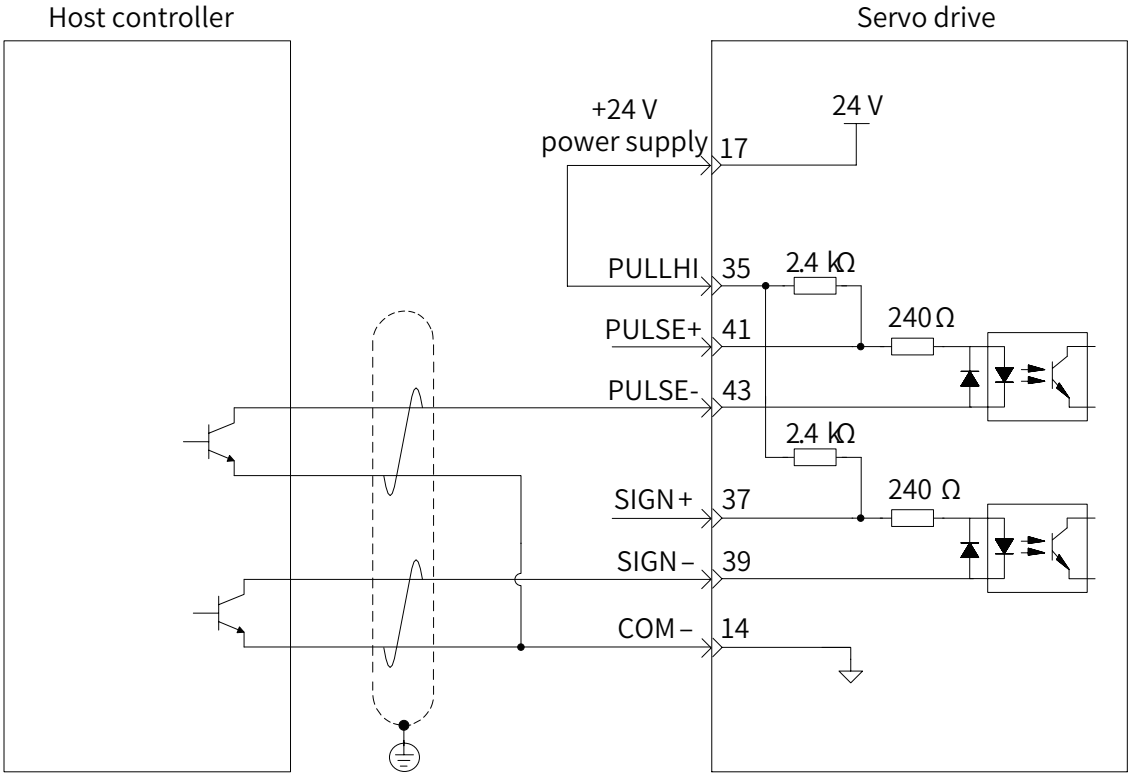

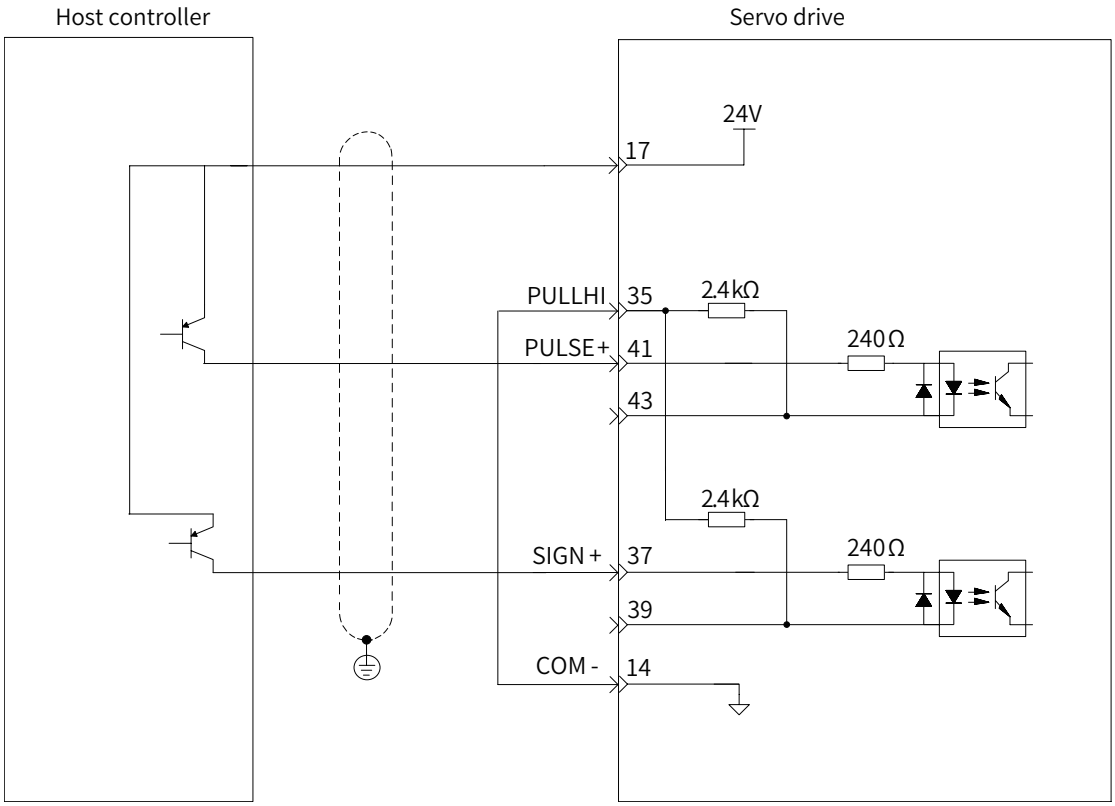

■ Incorrect wiring: Pin 14 (COM–) is not connected, leading to failure in forming a closed-loop circuit.

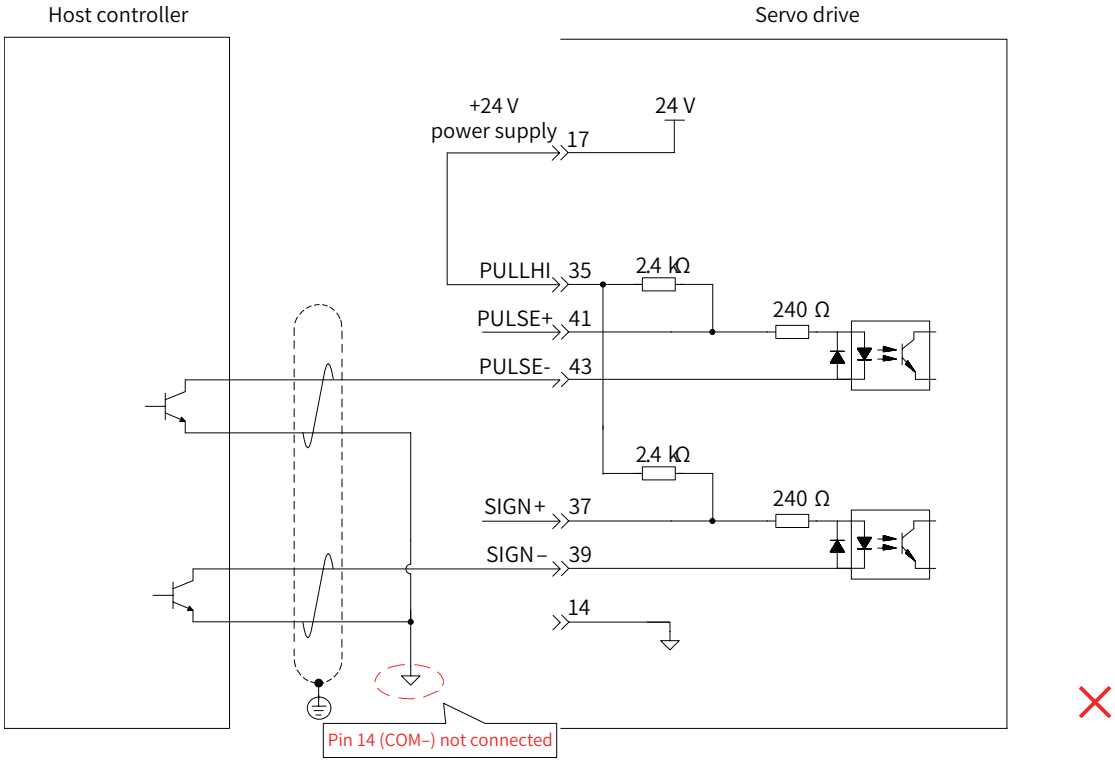

(b) If an external power supply is used:

Scheme 1: Using the built-in resistor (recommended)

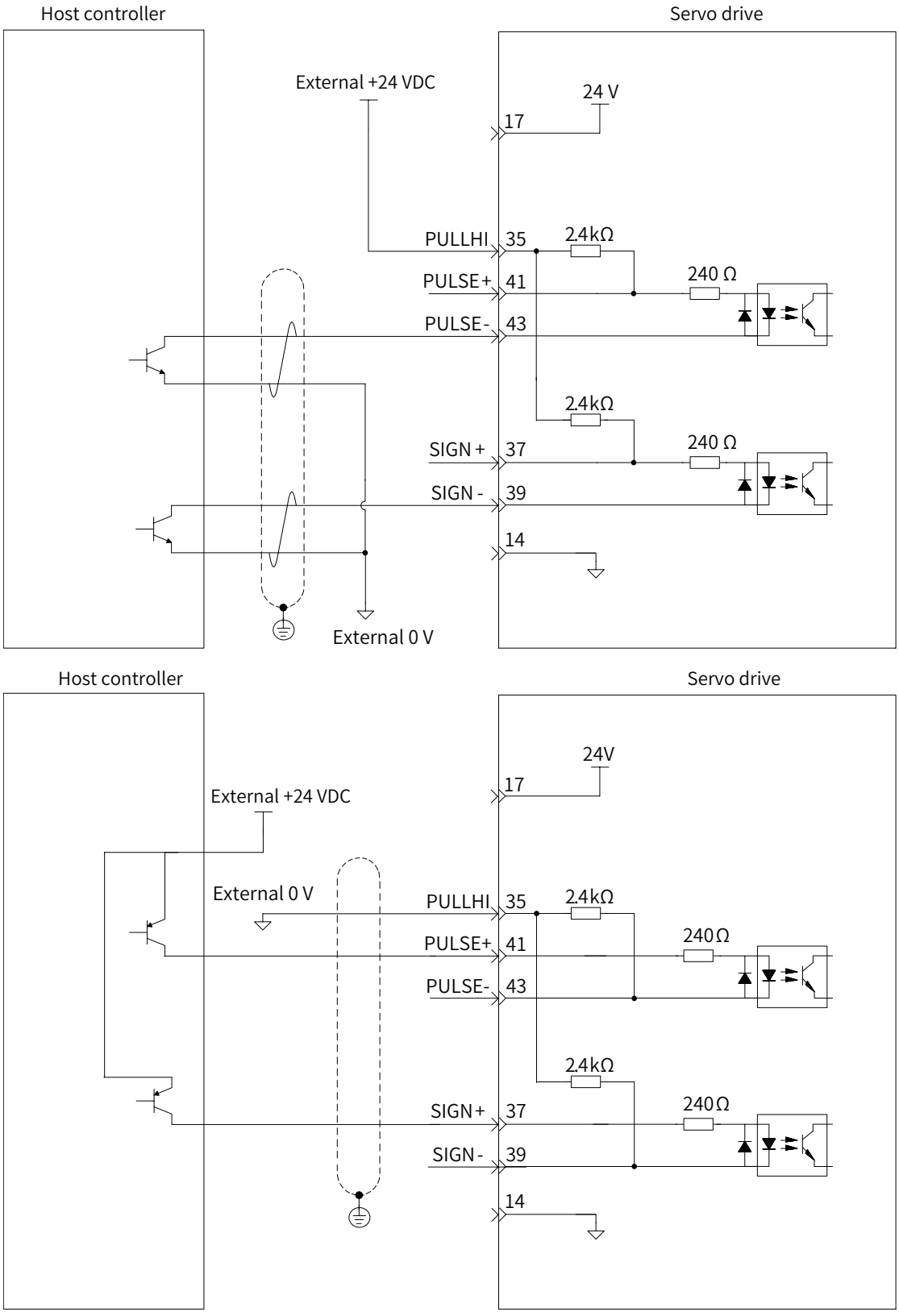

Scheme 2: Using an external resistor

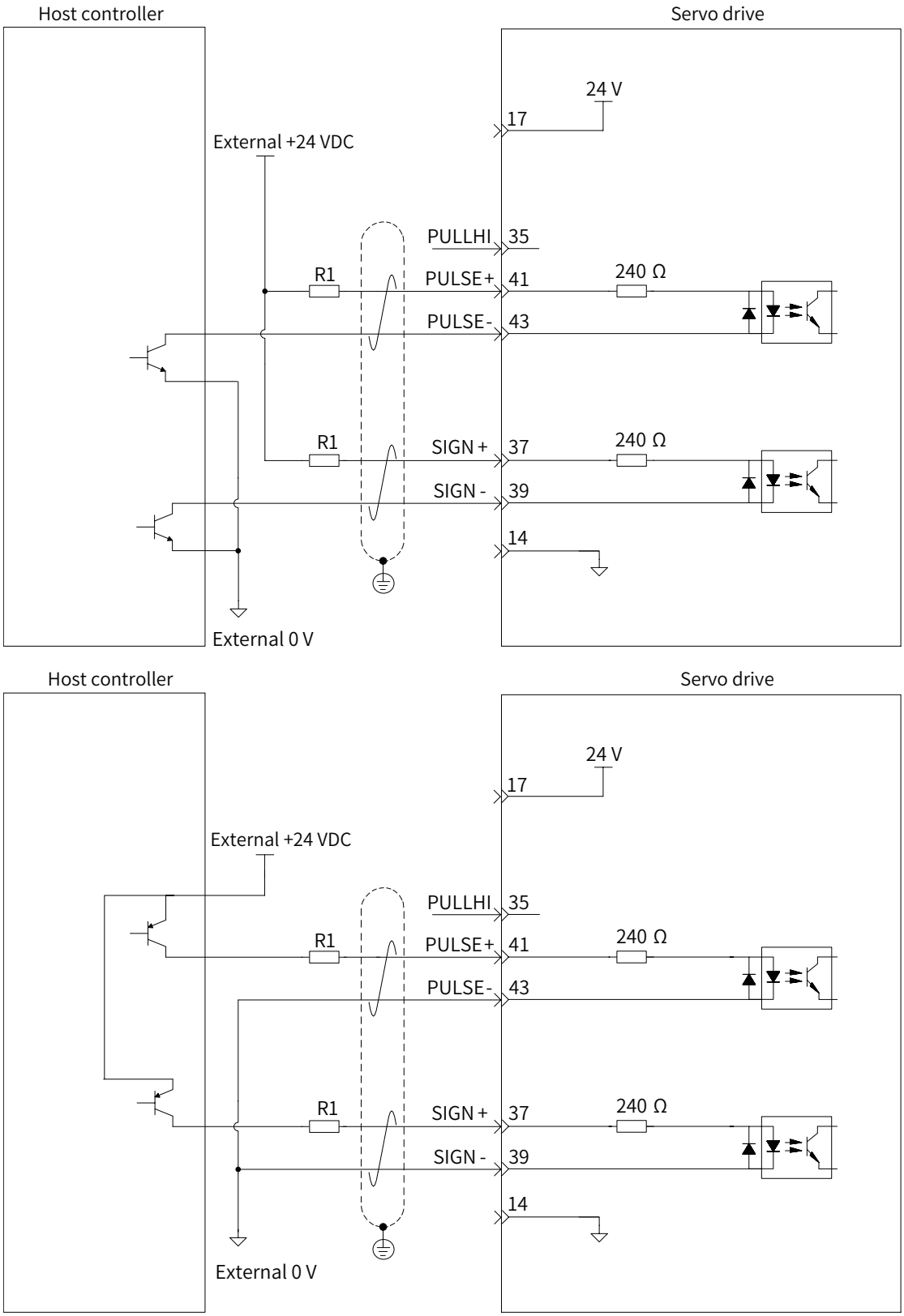

Select resistor R1 based on the following formula. $\frac{V_{CC}-1.5}{R1+240} = 10mA$

Figure 3-16 Recommended resistance of R1

VCC Voltage	R1 Resistance	R1 Power
24 V	2.4 kΩ	0.5 W

12 V	1.5 kΩ	0.5 W

The following figures show examples of incorrect wiring.

■ Incorrect wiring 1: The current limiting resistor is not connected, resulting in terminal burnout.

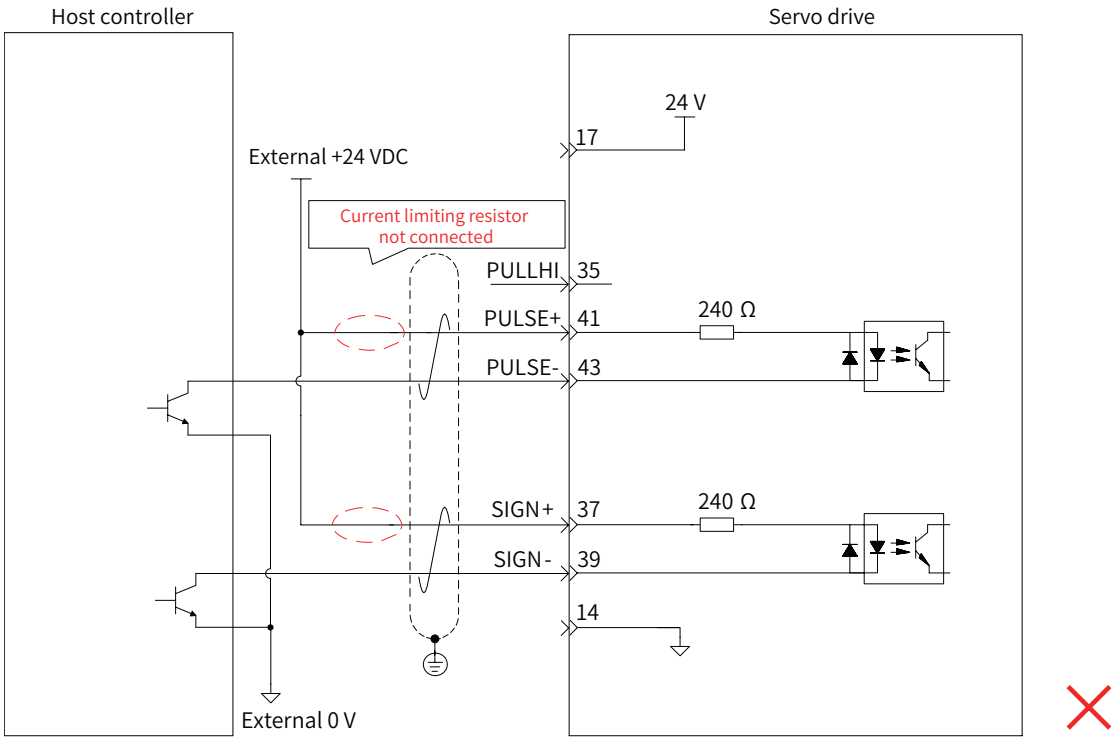

■ Incorrect wiring 2: Multiple terminals share one current limiting resistor, resulting in a pulse receiving error.

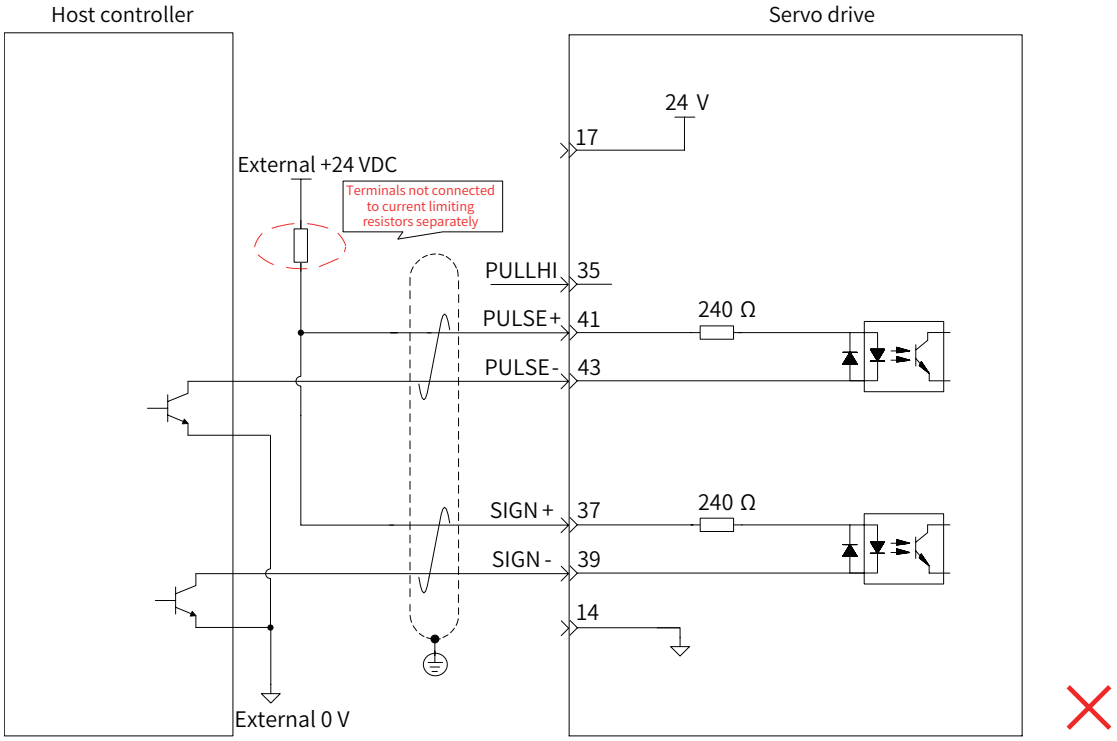

■ Incorrect wiring 3: One of the SIGN terminals is not connected, preventing the two SIGN terminals from receiving pulses.

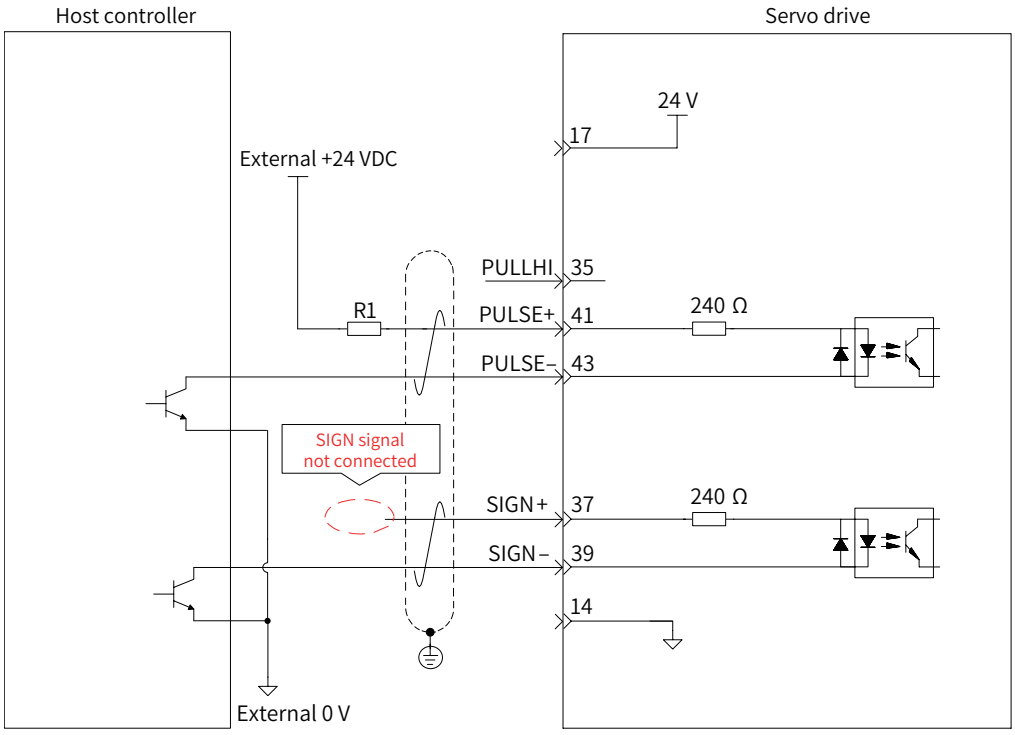

■ Incorrect wiring 4: Terminals are connected incorrectly, resulting in terminal burnout.

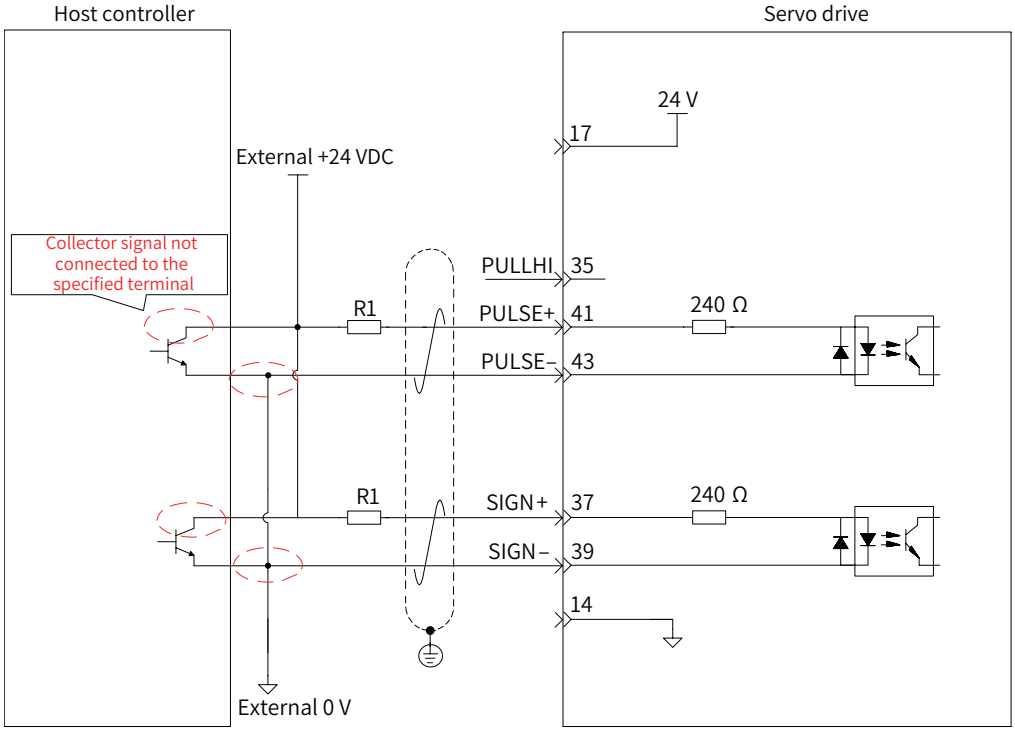

■ Incorrect wiring 5: Multiple terminals share one current limiting resistor, resulting in a pulse receiving error.

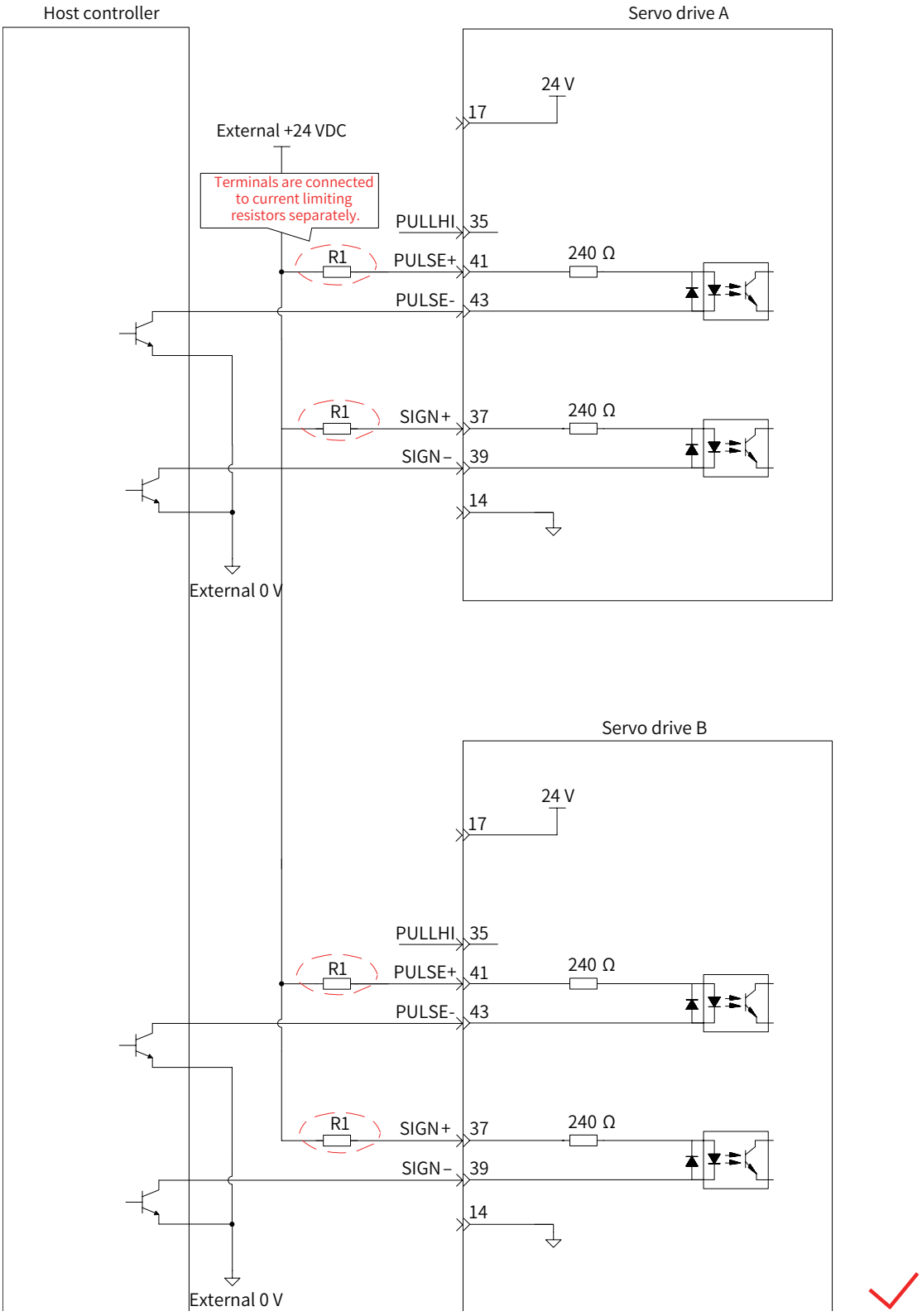

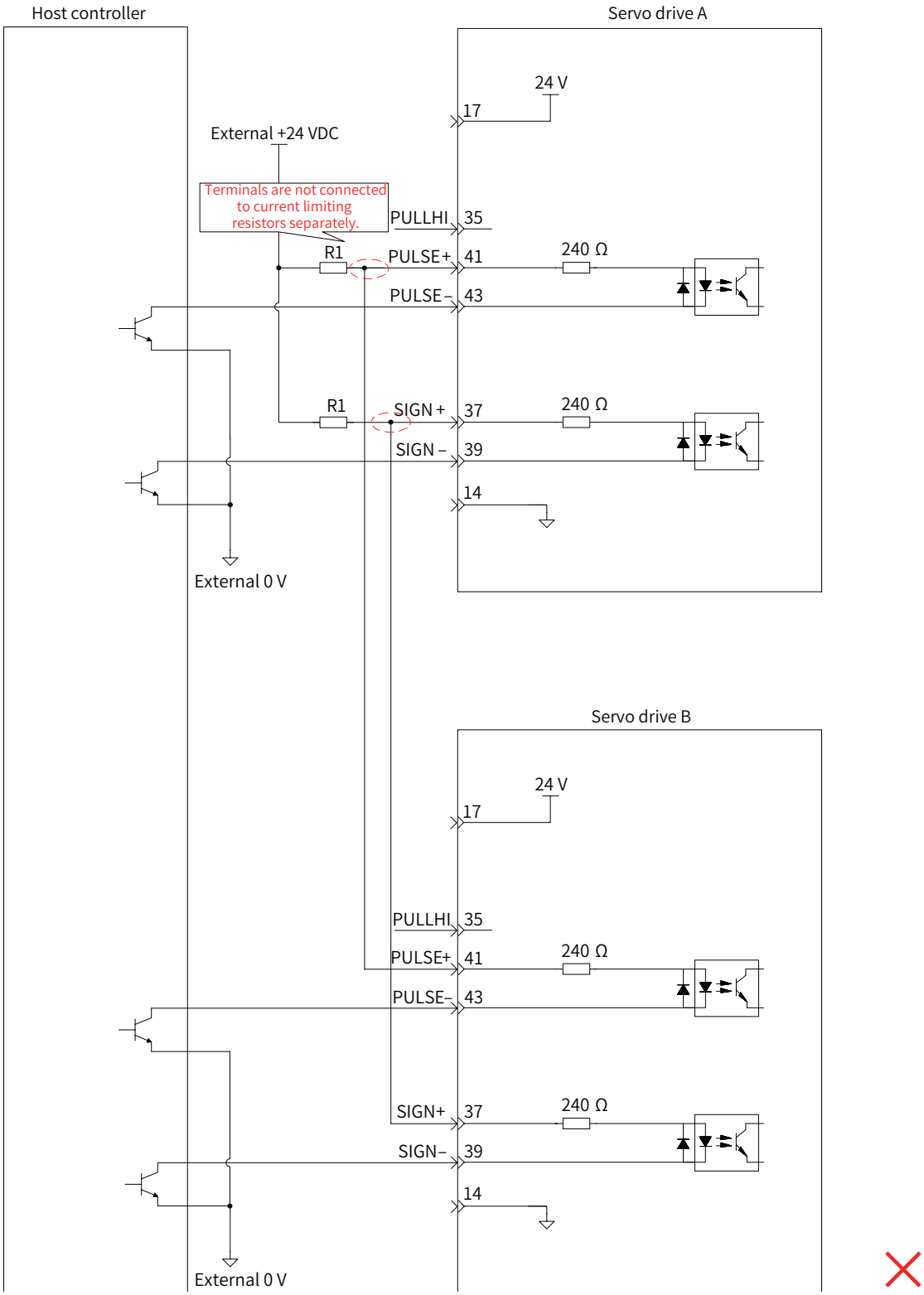
Host controller
Servo drive A
24 V
17
External +24 VDC
Terminals are not connected to current limiting resistors separately.
PULLHI
35
R1
PULSE+
41
240 Ω
PULSE–
43
R1
SIGN +
37
240 Ω
SIGN –
39
14
External 0 V
Servo drive B
24 V
17
PULLHI
35
PULSE+
41
240 Ω
PULSE–
43
SIGN+
37
240 Ω
SIGN–
39
14
External 0 V

2 High-speed pulse reference input

High-speed reference pulses and signs on the host controller side can be output to the servo drive only through the differential drive.

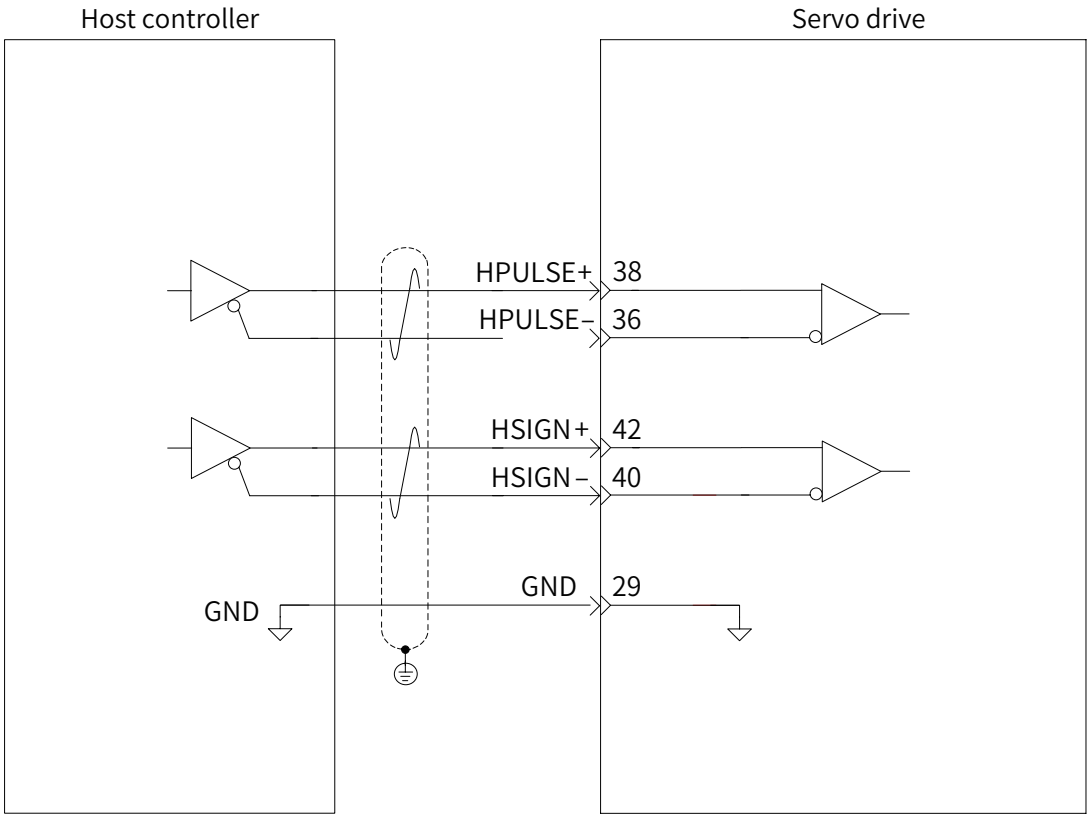

CAUTION

- The differential input must be 5 V. Otherwise, input pulses of the servo drive are unstable, resulting in the following situations:
- Pulse loss during reference pulse input
- Reference inverted during reference direction input
- Connect 5 V GND of the host controller to the GND of the servo drive to reduce noise interference.

3.7.2 Analog Input (AI) Signals

Table 3-23 AI signal description

Signal	Default Function	Pin No.	Function
Analog	AI2	18	Ordinary AI signals Resolution: 12-bit Input voltage: Max. ±12 V
	AI1	20	
	GND	19	AI signal ground

The terminals for analog speed and torque signal input are AI1 and AI2, resolution of which is 12-bit. The voltage value is set in group H03.

The input voltage range is –10 V to +10 V.

The maximum allowable voltage is ±12 V.

■ Input impedance: about 9 kΩ

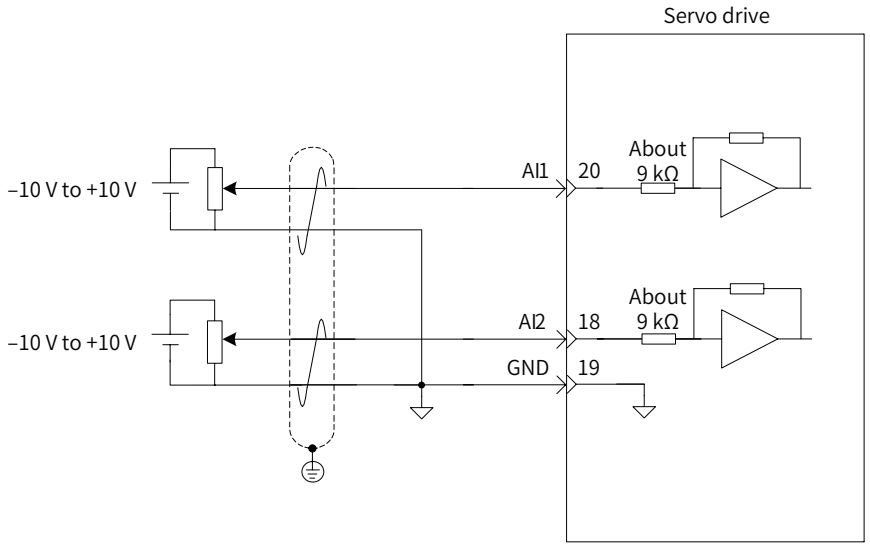

3.7.3 Digital Input/Digital Output (DI/DO) Signals

Table 3-24 Description of DI/DO signals

Signal		Default Function	Pin No.	Function
General	DI1	P-OT	9	Positive limit switch
	DI2	N-OT	10	Negative limit switch
	DI3	INHIBIT	34	Pulse input inhibited
	DI4	ALM-RST	8	Alarm reset (edge valid)
	DI5	S-ON	33	Servo ON
	DI6	ZCLAMP	32	Zero clamp
	DI7	GAIN-SEL	31	Gain switchover
	DI8	HomeSwitch	30	Home switch
	DI9	Reserved	12	-
	+24 V		17	Internal 24 V power supply Voltage range: 20 V to 28 V Max. output current: 200 mA
	COM–		14	
	COM+		11	Common DI terminal
	DO1+	S-RDY+	7	Servo ready
	DO1–	S-RDY–	6	
	DO2+	COIN+	5	Positioning completed
	DO2–	COIN–	4	
	DO3+	ZERO+	3	Zero speed
	DO3–	ZERO–	2	
	DO4+	ALM+	1	Fault output
	DO4–	ALM–	26	
	DO5+	HomeAttain+	28	Homing completed. PTC+ and PTC– are used for T025 and above models.
	DO5–	HomeAttain–	27	

1 DI circuits

The circuits of DI1 to DI9 are the same. The following section takes the DI1 circuit as an example.

1) When the host controller adopts relay output:

(a) If the internal 24 V power supply of the servo drive is used:

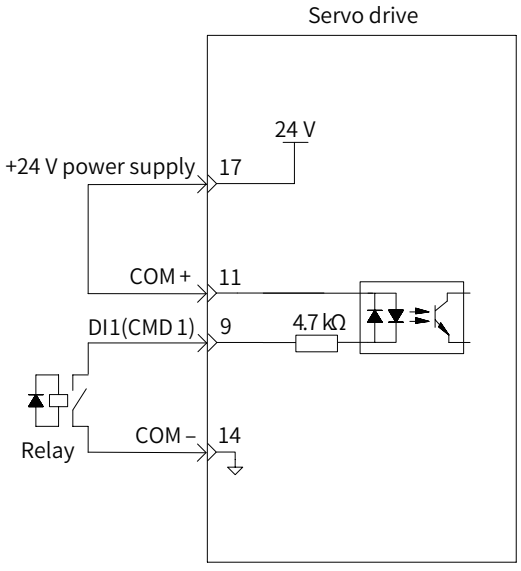

(b) If an external power supply is used:

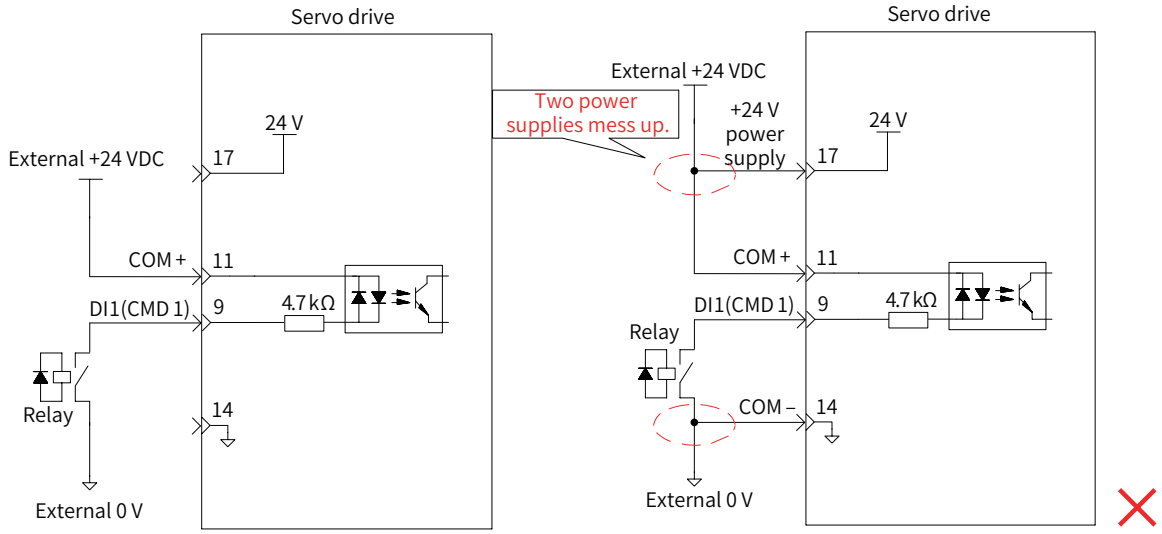

2) When the host controller adopts open collector output:

(a) If the internal 24 V power supply of the servo drive is used:

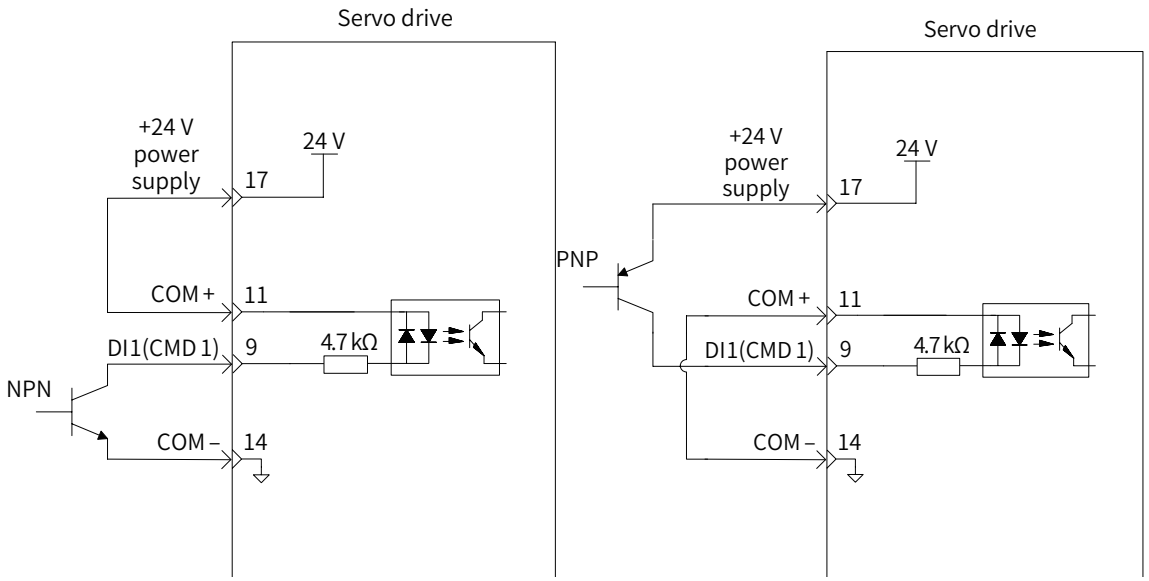

(b) If an external power supply is used:

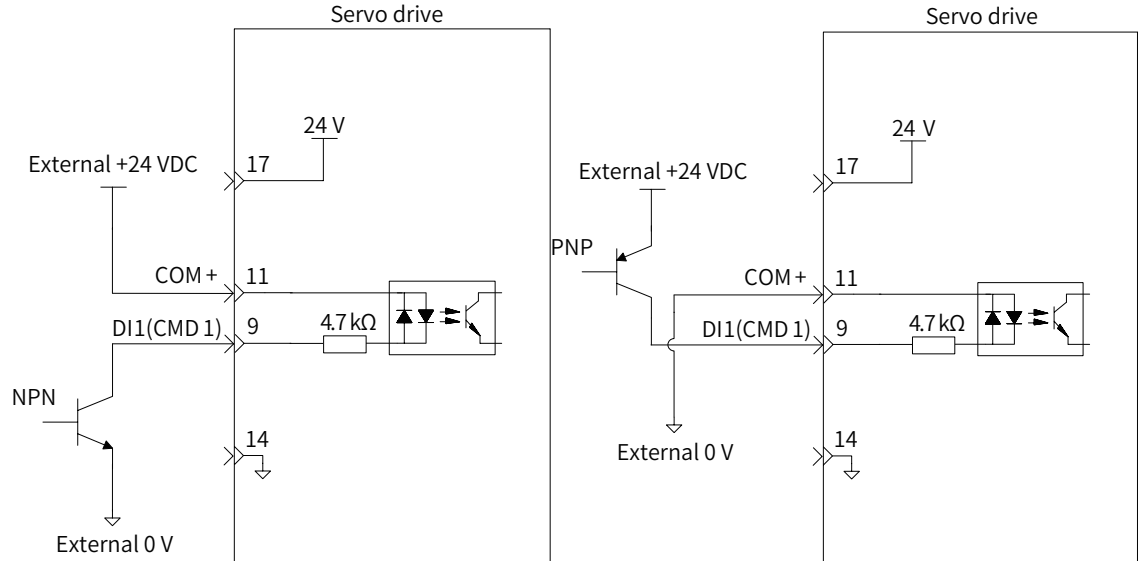

PNP and NPN input cannot be used together in the same circuit.

2 DO circuits

The circuits of DO1 to DO5 are the same. The following section takes the DO1 circuit as an example.

1) When the host controller adopts relay input:

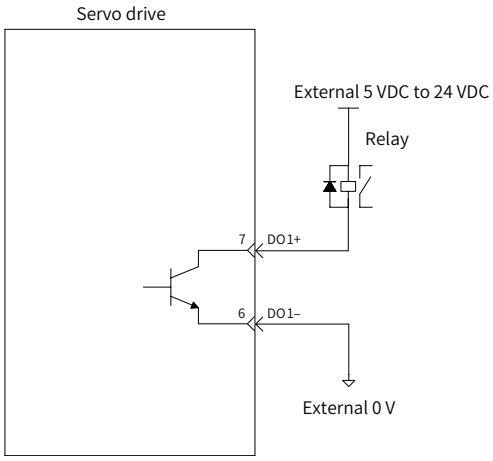

NOTE

When the host controller adopts relay input, a flywheel diode must be installed. Otherwise, the DO terminals may be damaged.

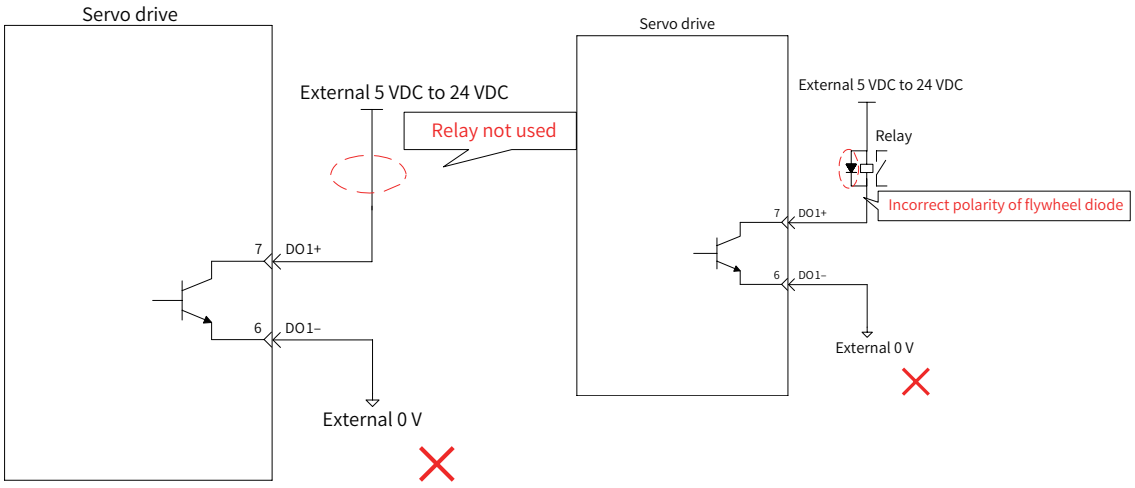

2) When the host controller adopts optocoupler input:

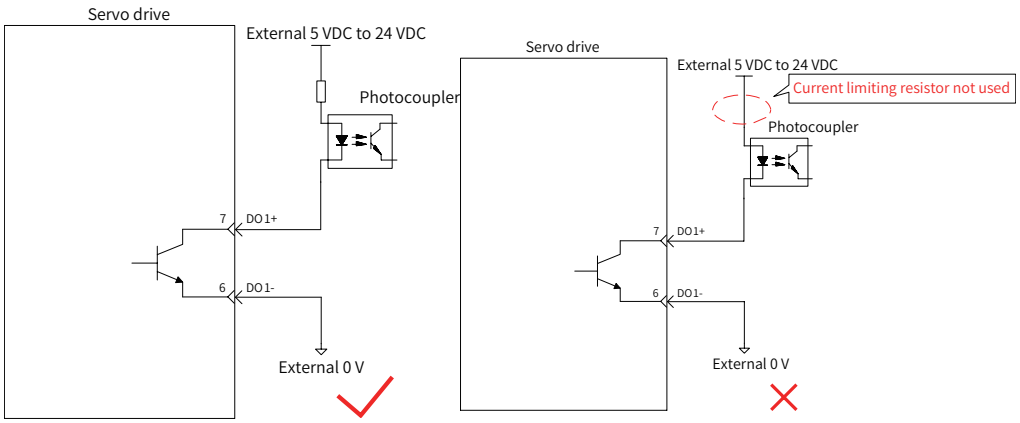

The maximum allowable voltage and current of the optocoupler output circuit inside the servo drive are as follows:

Max. voltage: 30 VDC

Max. current: DC 50 mA

3.7.4 Encoder Frequency-Division Output Circuit

Table 3-25 Encoder frequency-division output signals

Signal	Default Function	Pin No.	Function	
General	PAO+	21	Phase A frequency-division output signal	Quadrature frequency-division pulse output signals of phases A and B
	PAO–	22		
	PBO+	25	Phase B frequency-division output signal	
	PBO–	23		
	PZO+	13	Phase Z frequency-division output signal	Home pulse output signal
	PZO–	24		
	PZ-OUT	44	Phase Z frequency-division output signal	Home pulse open collector output signal
	GND	29	Home pulse open collector output signal ground	
General	+5 V	15	Internal 5 V power supply Max. output current: 200 mA	
	GND	16		
	PE	Enclosure		

The encoder frequency-division output circuit outputs differential signals through the differential drive. Typically, this circuit provides feedback signals to the host controller in a position control system. Use a differential or optocoupler receiving circuit on the host controller to receive the feedback signals. The maximum output current is 20 mA.

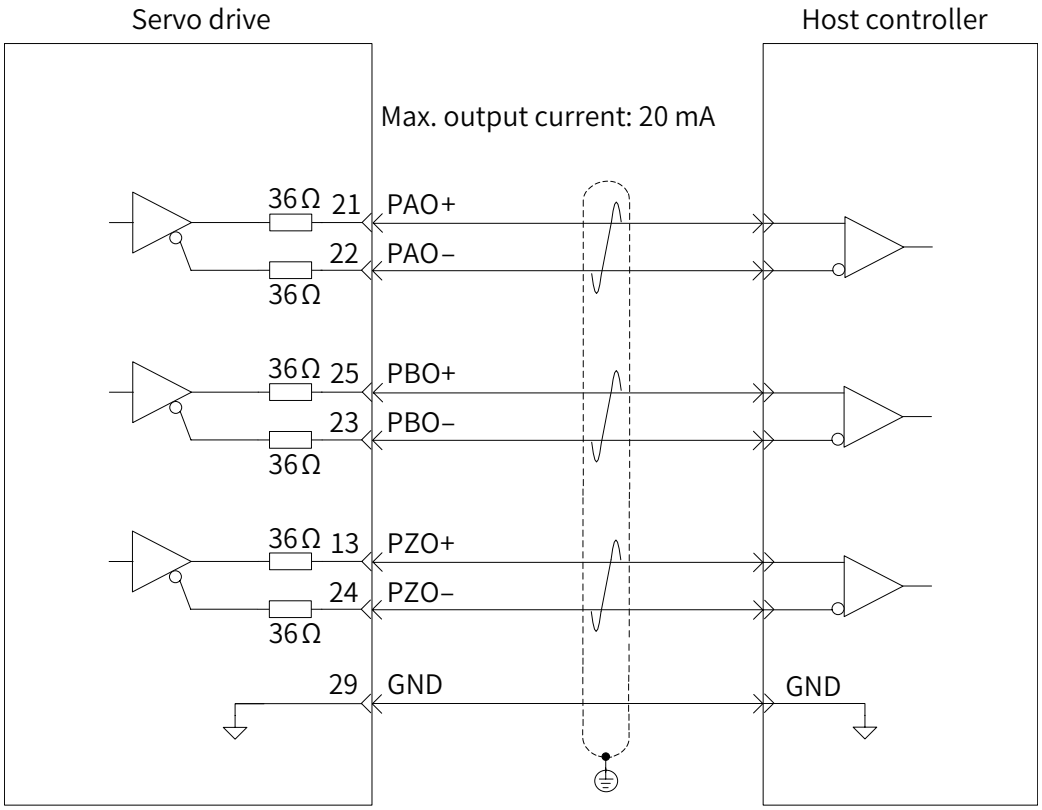

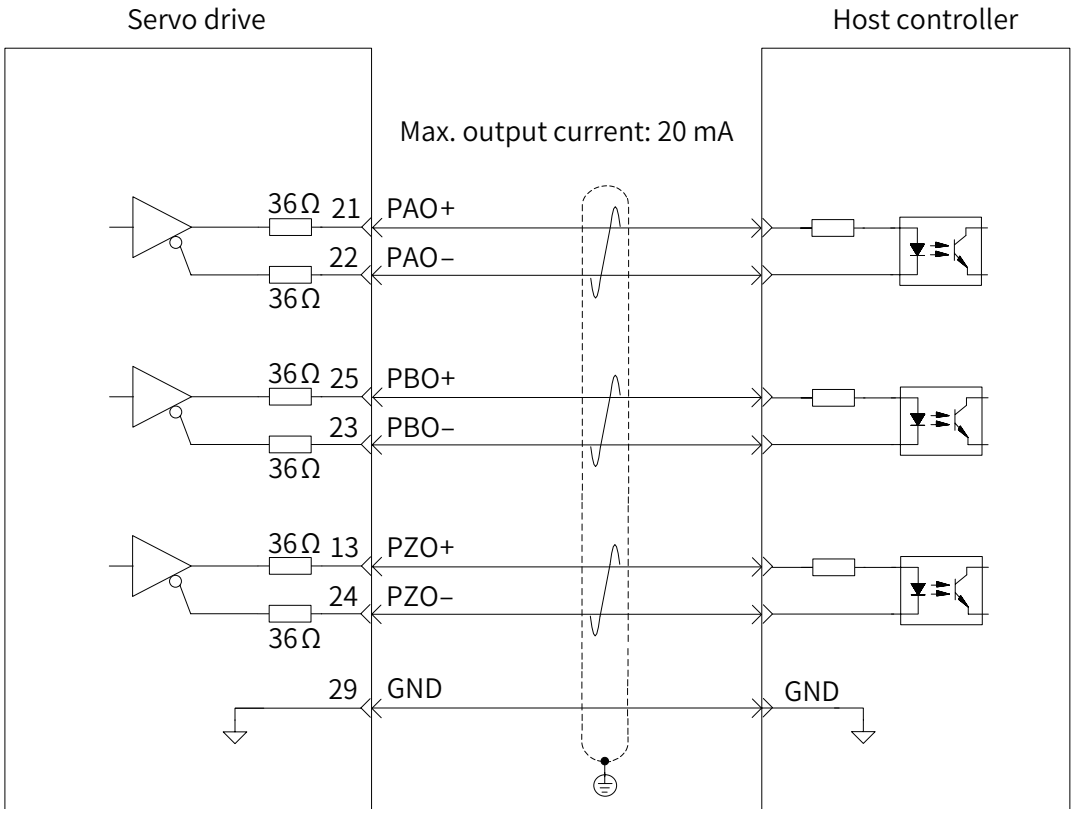

The encoder phase Z frequency-division output circuit supports open collector signals. Typically, this circuit provides feedback signals to the host controller in a position control system. Use an optocoupler circuit, relay circuit, or bus receiver circuit on the host controller to receive the feedback signals.

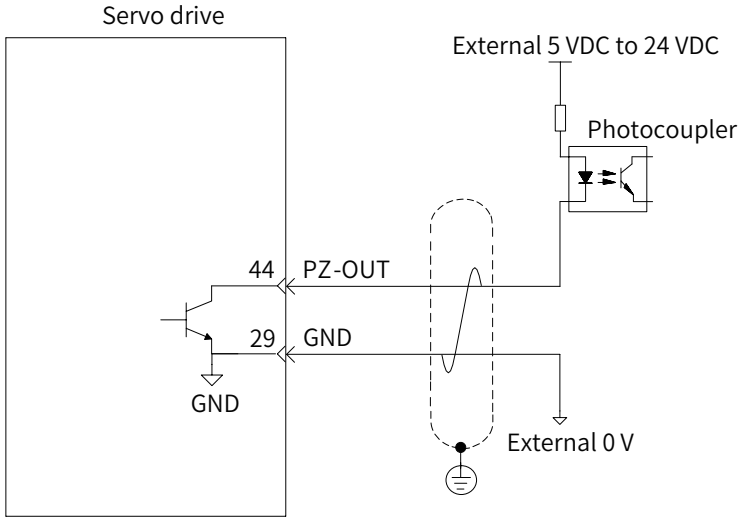

CAUTION

Connect the 5 V GND of the host controller to the GND of the servo drive and use shielded twisted pairs to reduce noise interference.

The maximum allowable voltage and current of the optocoupler output circuit inside the servo drive are as follows:

Max. voltage: 30 VDC

Max. current: DC 50 mA

3.7.5 Wiring of the Brake

The brake is used to prevent the servo motor shaft from moving and lock the motor position when the servo drive is not running. This is to keep the mechanical motion parts from moving due to gravity or external force.

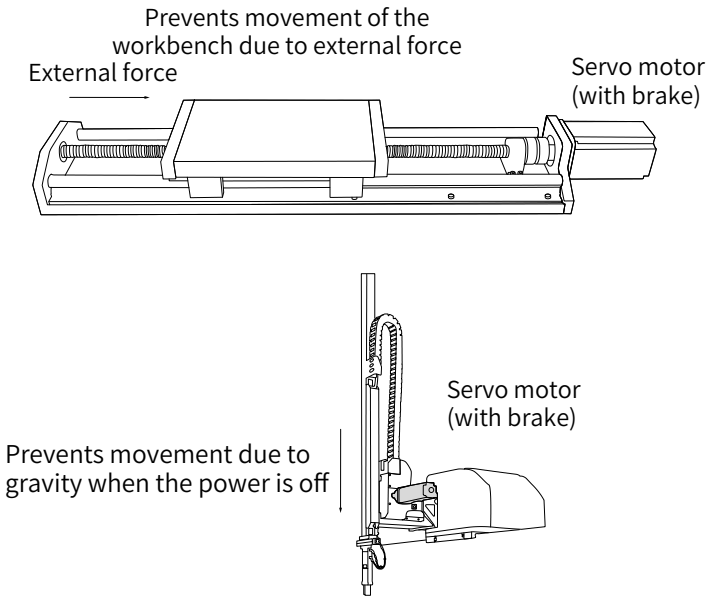

Figure 3-17 Application of the brake

CAUTION
◆ The built-in brake is a special non-energized mechanism designed for position-lock in the stop state. Do not use the built-in brake for any other purposes, such as braking. ◆ The brake coil has no polarity. ◆ Switch off the S-ON signal after the servo motor stops. ◆ When the motor with the built-in brake runs, the brake may generate a click sound, which does not affect its function. ◆ When brake coils are energized (the brake is released), flux leakage may occur on the shaft end. Pay special attention when using magnetic sensors near the motor.

1) Wiring of the brake

The connection of brake input signals is polarity insensitive. Users need to prepare a 24 V power supply. The following figure shows the standard wiring of the brake signals (BK) and the brake power supply.

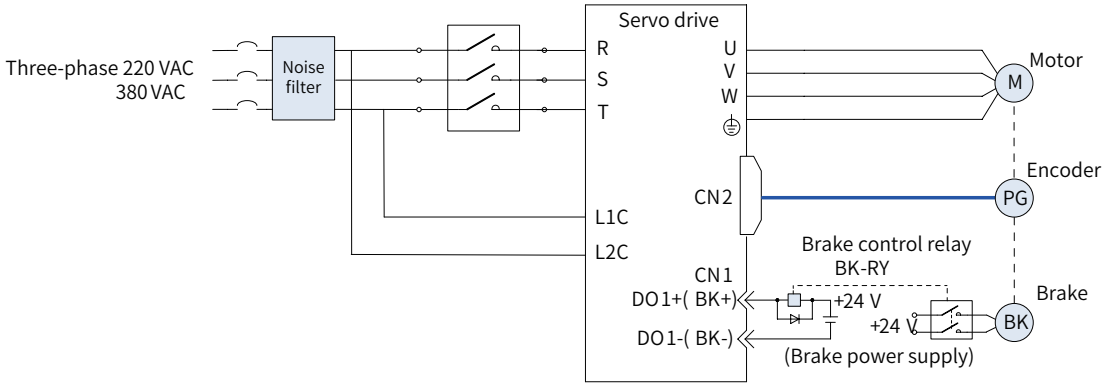

Figure 3-18 Wiring of the brake

2) Precautions during wiring:

When determining the length of the motor brake cable, take into full account the voltage drop caused by cable resistance. The input voltage must be at least 21.6 V to enable the brake to work properly. The following table lists the brake specifications of Inovance servo motors.

Table 3-26 Brake specifications

Motor Model	Holding Torque (N·m)	Supply Voltage (V) ±10%	Resistance (Ω) ±7%	Supply Current Range (A)	Release Time (ms)	Close Time (ms)
MS1H1-05B/10B	0.3	24	96	0.23 to 0.27	10	30
MS1H1-20B/40B	1.5		82.3	0.25 to 0.34	20	50
MS1H1-75B	2.5		50.1	0.40 to 0.57	25	60
MS1H3-85B/13C/18C	16		21.3	0.95 to 1.33	60	120
MS1H4-40B	1.5		82.3	0.25 to 0.34	20	50
MS1H4-75B	2.5		50.1	0.40 to 0.57	25	60

The brake shall not share power supply with other electrical devices. This is to prevent malfunction of the brake due to voltage or current drop caused by other working devices.

Use cables with a cross-sectional area above 0.5 mm^2.

3) Brake software setting

For the servo motor with brake, assign a DO terminal with function 9 (FunOUT.9: BK, brake output) and determine the activation logic of the DO terminal.

☆ Related function No.:

No.	Symbol	Function Name	Function
FunOUT.9	BK	Brake output	Inactive: The brake power supply is off and the brake is applied. The motor is in the position lock state. Active: The brake power supply is on and the brake is released. The motor can rotate.

The operating time sequences of the brake are different between normal state and fault state of the servo drive.

(a) Brake time sequence in the servo drive normal state

The brake time sequence in the normal state changes with the motor states: static and rotating.

Static: The motor speed is lower than 20 RPM.

Rotating: The motor speed is equal to or greater than 20 RPM.

(b) Brake time sequence in the motor static state

If the servo enabling (S-ON) signal changes from ON to OFF, and the present motor speed is lower than 20 RPM, the servo drive acts according to the brake time sequence in the motor static state.

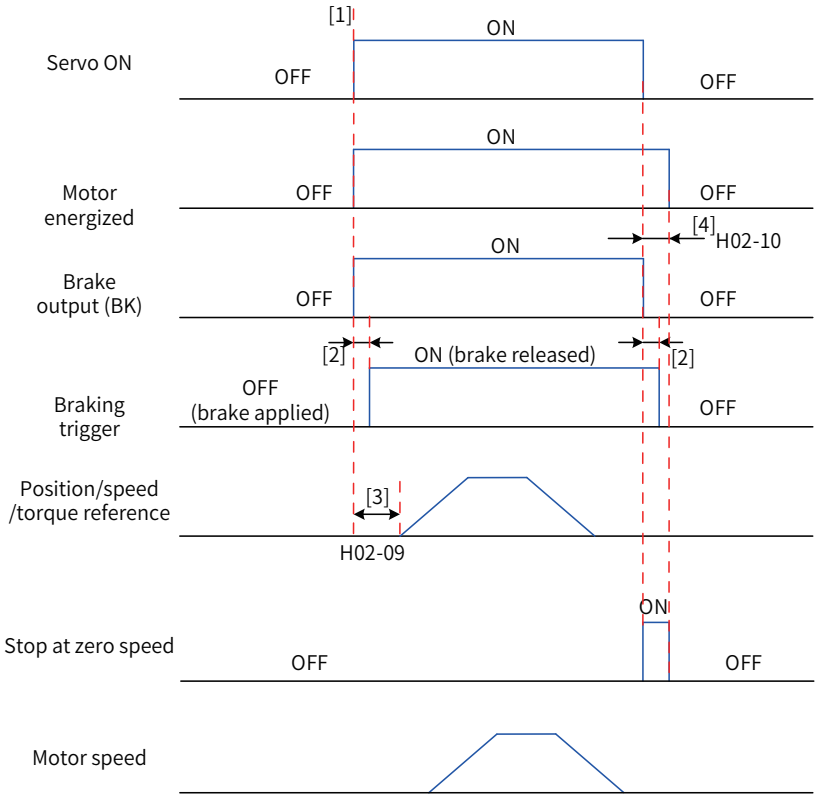

Figure 3-19 Brake time sequence in the motor static state

NOTE

◆ [1] When the S-ON signal is switched on, the brake output signal will also become ON, and the motor enters the energized state.

◆ [2] For delay of brake contactor actions, see *"Chapter 1 Product Information"*.

◆ [3] The time interval from the moment when brake output signal becomes ON to the moment when the command is input must be larger than the value defined by H02-09 (Delay from brake output ON to command received).

◆ [4] When the motor is in the static state (motor speed below 20 RPM), if the S-ON signal is switched off, the brake output signal will also become OFF. You can use H02-10 (Delay from brake output OFF to motor de-energized in static state) to set the delay from the moment the brake output signal becomes OFF to the moment the motor enters the de-energized state.

☆ Related parameters:

Para.		Name	Value Range	Unit	Default	Effective Time	Setting Condition	Related Mode
H02	09	Delay from brake output ON to command received	0 to 500	ms	250	Immediately	During operation	PS
H02	10	Delay from brake output OFF to motor de-energized in static state	1 to 1000	ms	150	Immediately	During operation	PS

(c) Brake time sequence in the motor rotating state

If the S-ON signal changes from ON to OFF, and the present motor speed is equal to or greater than 20 RPM, the servo drive acts according to the brake time sequence in the motor rotating state.

Note:

If the S-ON signal changes from OFF to ON, do not input a position/speed/torque reference within the time defined by H02-09 (Delay from brake output ON to command received). Otherwise, reference loss or running error may occur.

If the S-ON signal becomes OFF during motor rotating, the motor enters the "Stop at zero speed" state, but the brake output signal becomes OFF only after one of the following conditions is met:

The time defined by H02-12 (Delay from S-ON OFF to brake output OFF in rotating state) is not reached, but the motor has decelerated to the value defined by H02-11 (Motor speed threshold at brake output OFF in rotating state).

The time defined by H02-12 (Delay from S-ON OFF to brake output OFF in rotating state) is reached, but the motor speed is still higher than the value defined by H02-11 (Motor speed threshold at brake output OFF in rotating state).

After the brake output signal changes from ON to OFF, the motor remains energized within 50 ms to prevent the mechanical motion part from moving due to the gravity or external force.

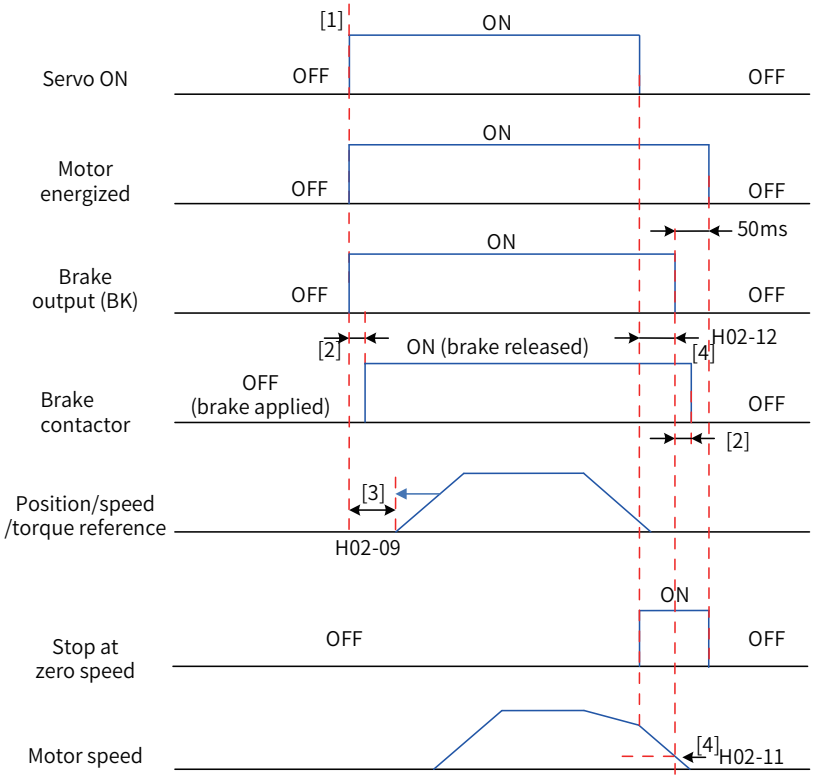

Figure 3-20 Brake time sequence in the motor rotating state

NOTE

◆ [1] When the S-ON signal is switched on, the brake output signal will also become ON, and the motor enters the energized state.

◆ [2] For delay of brake contactor actions, see *"Chapter 1 Product Information"*.

◆ [3] The time interval from the moment when brake output signal becomes ON to the moment when the command is input must be larger than the value defined by H02-09 (Delay from brake output ON to command received).

◆ [4] After the S-ON signal becomes OFF during motor rotation, set the delay from the moment when the S-ON signal becomes OFF to the moment when the brake output signal becomes OFF in H02-11 (Motor speed threshold at brake output OFF in rotating state) and H02-12 (Delay from S-ON OFF to brake output OFF in rotating state). The motor enters the de-energized state after a delay of 50 ms when the brake output signal becomes OFF.

☆ Related parameters:

Para.		Name	Value Range	Unit	Default	Setting Condition	Effective Time	Related Mode
H02	11	Motor speed threshold at brake output OFF in rotating state	0 to 3000	RPM	30	During operation	Immediately	PS
H02	12	Delay from S-ON OFF to brake output OFF in rotating state	1 to 1000	ms	500	During operation	Immediately	PS

(d) Brake time sequence in the servo drive fault state

Based on stop mode, servo faults are classified into class 1 (No.1) faults and class 2 (No.2) faults. For details, see Chapter 6. The brake time sequence in the fault state changes with the fault class.

For No.1 faults:

The brake DO output condition is the same as the "brake time sequence in the motor rotating state when the servo drive is in normal state". That is,

the brake output signal becomes OFF only when one of the following conditions is met:

- The time defined by H02-12 (Delay from S-ON OFF to brake output OFF in rotating state) is not reached, but the motor has decelerated to the value defined by H02-11 (Motor speed threshold at brake output OFF in rotating state).
- The time defined by H02-12 (Delay from S-ON OFF to brake output OFF in rotating state) is reached, but the motor speed is still higher than the value defined by H02-11 (Motor speed threshold at brake output OFF in rotating state).

For No.2 faults:

When a No.2 fault occurs and the brake is enabled, the stop mode is forced to "Stop at zero speed, keeping de-energized state".

In this case, the servo motor stops at zero speed first. When the actual motor speed is lower than 20 RPM, the brake output signal immediately becomes OFF, but the motor is still in the energized state within the time defined by H02-10 (Delay from brake output OFF to motor de-energized in static state).

3.8 Wiring of Communication Signal Terminals CN3 and CN4

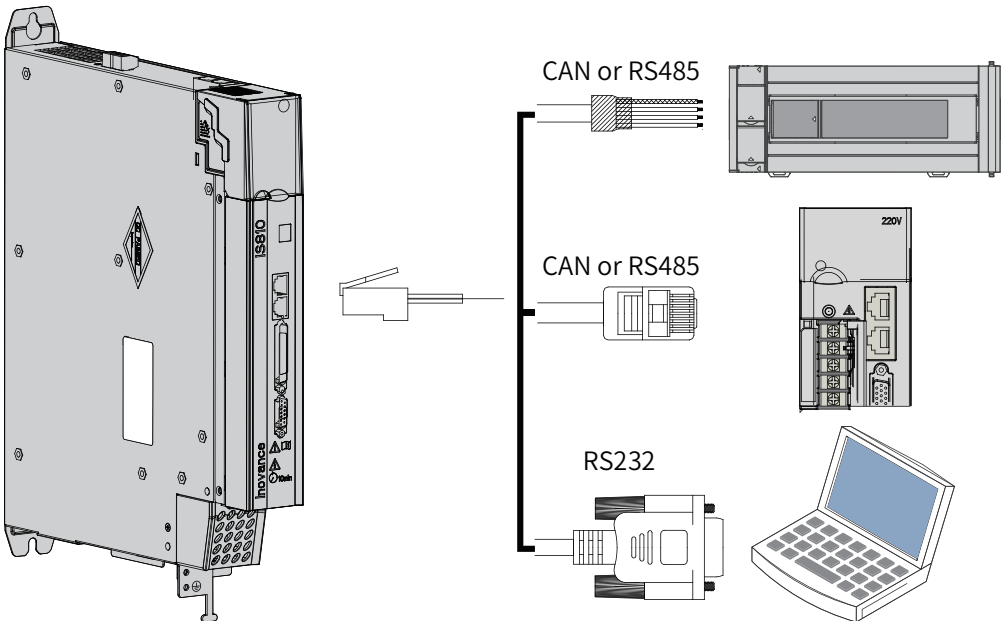

Figure 3-21 Wiring of communication cables

CN3 and CN4 are identical communication signal terminals connected in parallel internally.

3.8.1 Pins of Communication Signal Terminal Connectors

CN3 and CN4 terminals are used for communication with the PC, PLC, and other drives. For pin arrangement of CN3 and CN4, see the table below.

Table 3-27 Pins of communication signal terminal connectors

Pin No.	Definition	Description	Pin Arrangement
1	CANH	CAN communication port	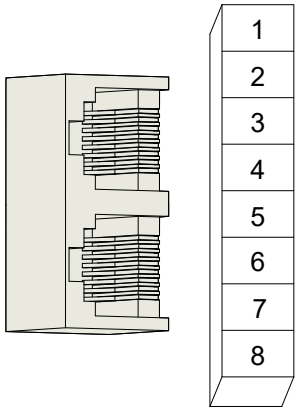
2	CANL		
3	CGND	CAN communication ground	
4	RS485+	RS485 communication port	
5	RS485–		
6	RS232-TXD	RS232 transmit end, connected to the receive end of the host controller	
7	RS232-RXD	RS232 receive end, connected to the transmit end of the host controller	
8	GND	Ground	
Enclosure	PE	Shield	

3.8.2 CAN Communication Connections

1) CAN communication connection with PLC

The following figure shows the cable used for the communication between the servo drive and PLC in CAN communication networking.

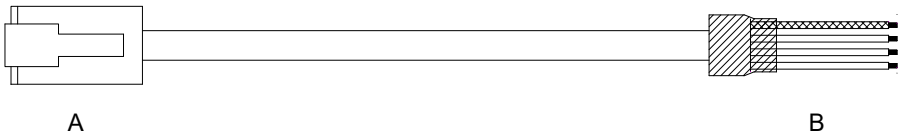

Figure 3-22 Outline drawing of the cable used for communication between the servo drive and PLC

Table 3-28 Cable pin connections for communication between PLC and the servo drive

RJ45 on the Drive (A)			PLC (B)		
Communication Type	Signal	Pin No.	Communication Type	Signal	Pin No.
CAN	CANH	1	CAN	CANH	1
	CANL	2		CANL	2
	CGND	3		CGND	3
	PE (shield)	Enclosure		PE (shield)	Enclosure

2) CAN communication connection for multiple servo drives in parallel

The following figure shows the cable used for the communication between multiple servo drives in parallel connection in CAN communication networking.

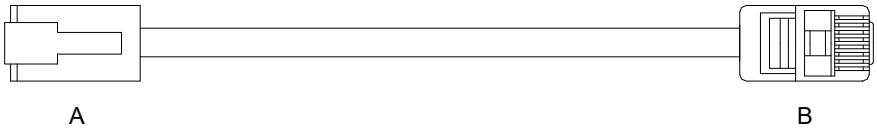

Figure 3-23 Outline drawing of the cable used for communication between multiple servo drives in parallel

Table 3-29 Cable pin connections for communication between multiple servo drives in parallel (pins in CAN group used only)

RJ45 on the Drive (A)			RJ45 on Another Drive (B)		
Communication Type	Signal	Pin No.	Communication Type	Signal	Pin No.
CAN	CANH	1	CAN	CANH	1
	CANL	2		CANL	2
	CGND	3		CGND	3
	PE (shield)	Enclosure		PE (shield)	Enclosure

3) Grounding precautions for CAN communication

When using CAN communication, connect the CGND terminal of the host controller to the CGND terminal of the servo drive, as shown in the following figure.

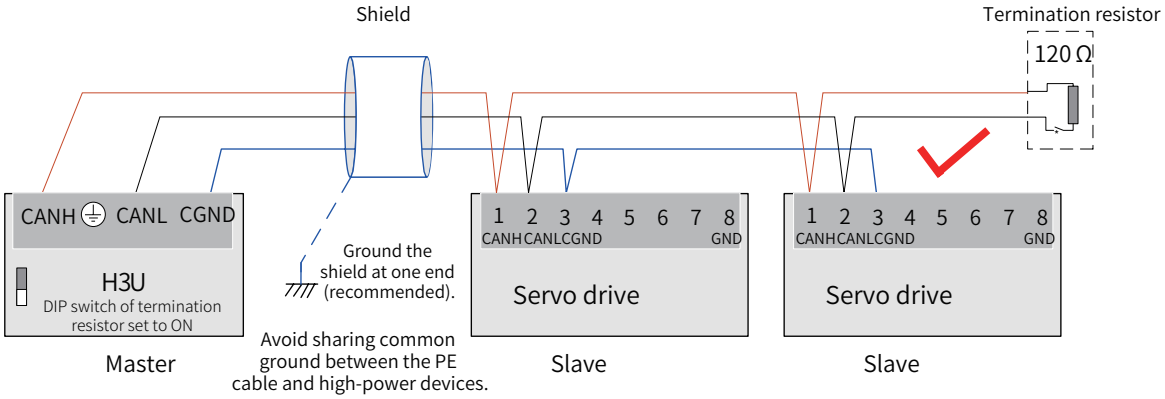

Figure 3-24 Correct CAN connection

Caution

- A CAN communication termination resistor is embedded in the PLC and therefore the corresponding DIP switch must be set to ON.
- It is recommended to ground the shield at one end.

Do not connect the CGND terminal of the host controller to the GND terminal of the servo drive. Otherwise, the servo drive may be damaged.

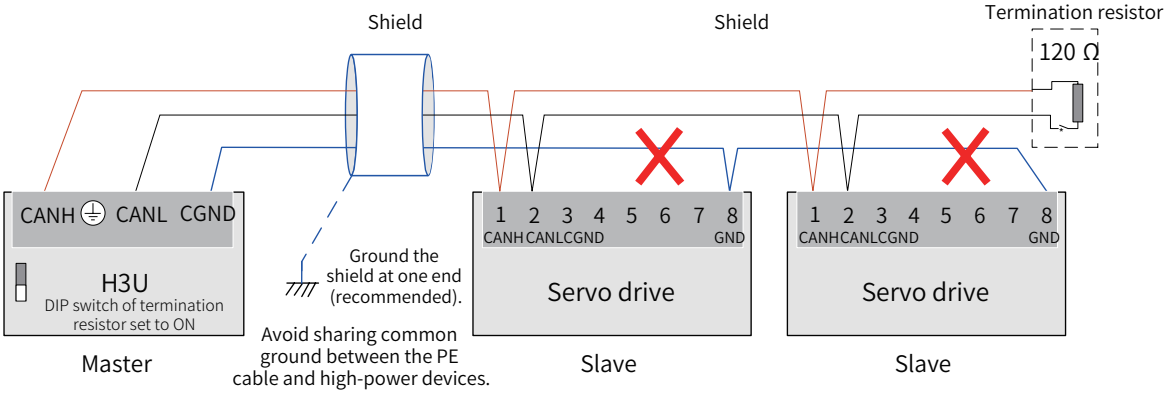

Figure 3-25 Incorrect CAN connection

3.8.3 RS485 Communication Connections

1) RS485 communication connection with PLC

The following figure shows the cable used for the communication between the servo drive and PLC in RS485 communication networking.

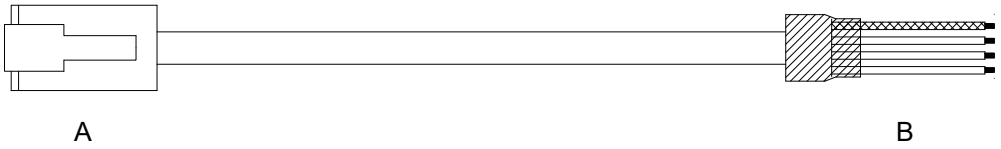

Figure 3-26 Outline drawing of the cable used for communication between the servo drive and PLC

Table 3-30 Cable pin connections for communication between PLC and the servo drive

RJ45 on the Drive (A)			PLC (B)		
Communication Type	Signal	Pin No.	Communication Type	Signal	Pin No.
RS485	RS485+	4	RS485	RS485+	4
	RS485–	5		RS485–	5
	GND	8		GND	8
	PE (shield)	Enclosure		PE (shield)	Enclosure

2) RS485 communication connection for multiple servo drives in parallel

The following figure shows the cable used for the communication between multiple servo drives in parallel connection in RS485 communication networking.

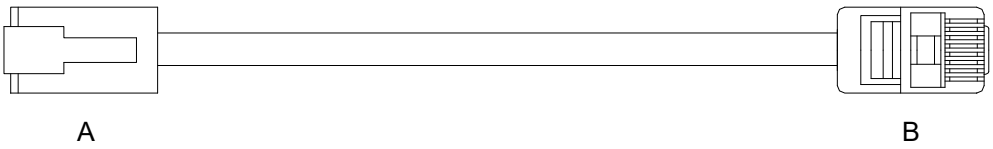

Figure 3-27 Outline drawing of the cable used for communication between multiple servo drives in parallel

Table 3-31 Cable pin connections for communication between multiple servo drives in parallel (pins in RS485 group used only)

RJ45 on the Drive (A)			RJ45 on Another Drive (B)		
Communication Type	Signal	Pin No.	Communication Type	Signal	Pin No.
RS485	RS485+	4	RS485	RS485+	4
	RS485–	5		RS485–	5
	GND	8		GND	8
	PE (shield)	Enclosure		PE (shield)	Enclosure

3) Grounding precautions for RS485 communication

When using RS485 communication, connect the ⏚ (GND) terminal of the host controller to the GND terminal of the servo drive, as shown in the following figure.

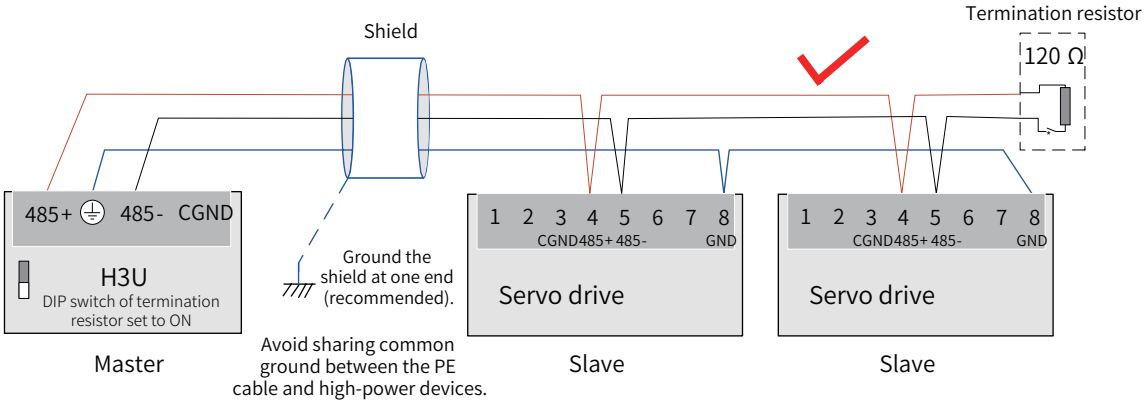

Figure 3-28 Correct RS485 Connection

Caution:

- An RS485 communication termination resistor is embedded in the PLC and therefore the corresponding DIP switch must be set to ON.
- It is recommended to ground the shield at one end.

Do not connect the ⏚ (GND) terminal of the host controller to the CGND terminal of the servo drive. Otherwise, the servo drive may be damaged.

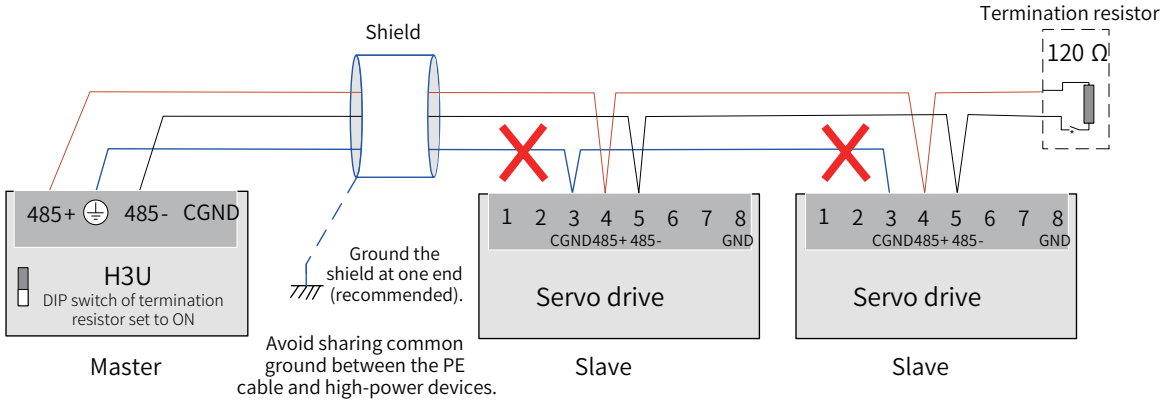

Figure 3-29 Incorrect RS485 Connection

3.8.4 RS232 Communication Connection with PC

Connect the servo drive and the PC by using the PC communication cable. The common communication port RS232 is recommended. The following figure shows the cable.

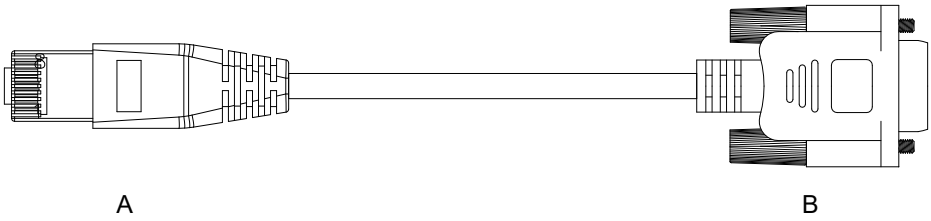

Figure 3-30 Appearance of the PC communication cable

Table 3-32 Pin connections of the communication cable between the servo drive and PC

RJ45 on the Drive (A)		DB9 on the PC (B)	
Signal	Pin No.	Signal	Pin No.
RS232-TXD	6	PC-RXD	2
RS232-RXD	7	PC-TXD	3
GND	8	GND	5
PE (shield)	Enclosure	PE (shield)	Enclosure

The following table describes the pin definition of the DB9 terminal on the PC.

Table 3-33 Table 4-28 Pin definition of the DB9 terminal on the PC (B side in the preceding figure)

Pin No.	Definition	Description	Pin Arrangement
2	PC-RXD	PC receive end	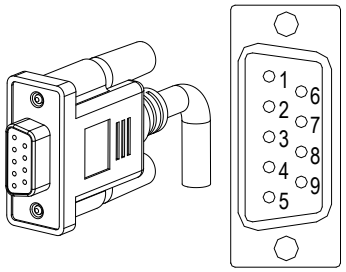
3	PC-TXD	PC transmit end	
5	GND	Ground	
Enclosure	PE	Shield	

If the host controller provides only the USB port, use the serial-to-USB cable for conversion.

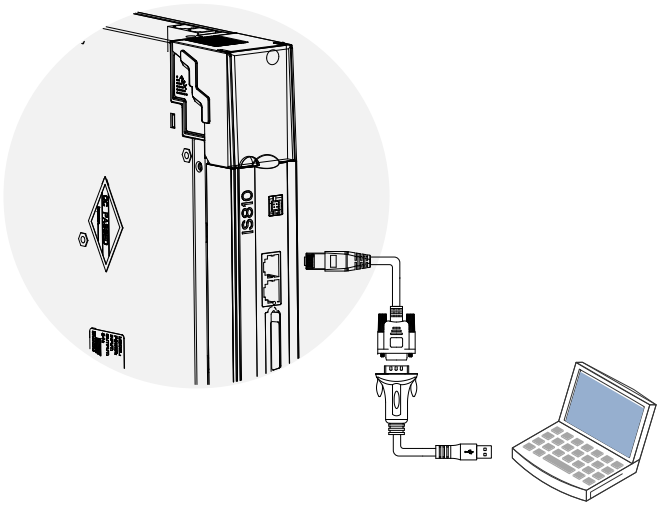

Figure 3-31 Serial-to-USB conversion

Recommended: Z-TEK (model: ZE551A), equipped with 0.8 m USB extension cable
Chip model: FT232

3.9 Wiring of Analog Monitoring Signals

The following figure shows the pin arrangement of the analog monitoring signal terminal connector CN5.

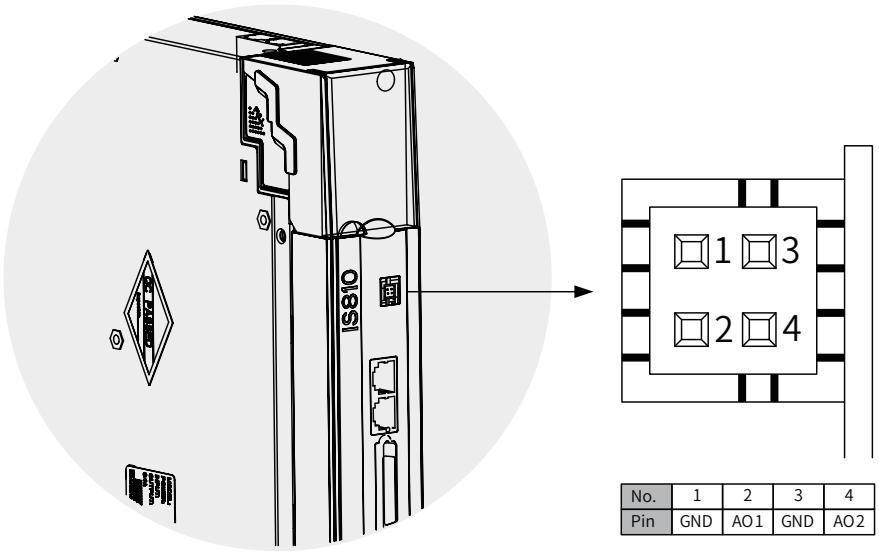

No.	1	2	3	4
Pin	GND	AO1	GND	AO2

Figure 3-32 Analog monitoring signal terminal connector

Corresponding interface circuit:

- AO: –10 V to +10 V
- Max. output current: 1 mA

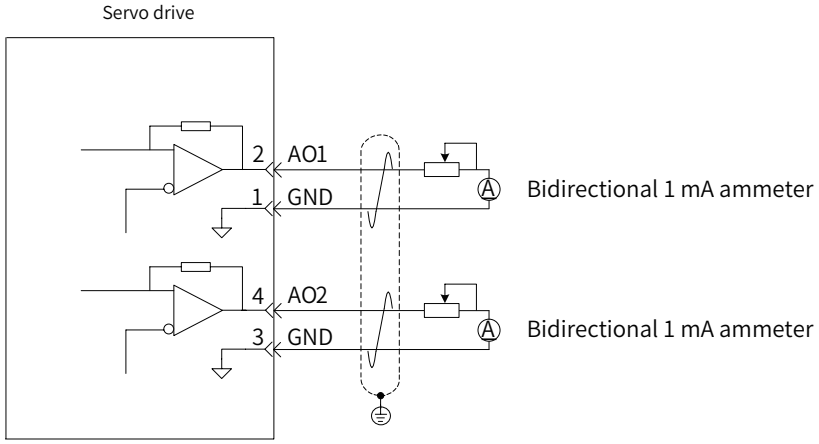

The monitored objects of analog signals are listed in the following table.

Table 3-34 Monitored objects of analog signals

Signal	Monitored Object
AO1	00: Motor speed
AO2	01: Speed reference 02: Torque reference 03: Position deviation 04: Position amplifier deviation 05: Position reference speed 06: Positioning completed reference 07: Speed feedforward (H04-50 and H04-53)

3.10 Anti-Interference Measures for Electrical Wiring

Take the following measures to suppress interference:

1) Use cables shorter than 3 m for reference input and cables shorter than 20 m for encoders.
2) Use a thick cable (above 2.0 mm^2) for grounding.
3) D class (or higher class) grounding is recommended (grounding resistance below 100 Ω).
4) Use single-point grounding.
5) Use a noise filter to prevent radio frequency interference. For use in the domestic environment or environment subject to strong power supply noise interference, install a noise filter at the input side of the power cable.

To prevent malfunction due to electromagnetic interference, take the following measures:

1) Install the host controller and noise filter as close to the servo drive as possible.
2) Install a surge protection device on the relay, solenoid, and electromagnetic contactor coils.
3) Separate high-voltage cables from low-voltage cables by a distance of at least 30 cm. Do not put these cables in the same duct or bundle them together.
4) Do not share the power supply with an electric welder or an electric discharge machining device. When the servo drive is placed near a high-frequency generator, install a noise filter on the input side of the power cable.

3.10.1 Anti-Interference Wiring Example and Grounding

The servo drive uses high-speed switch elements in the main circuit. The noise generated by such switches may affect the normal operation of the system due to improper wiring or grounding. Therefore, the servo drive must be wired and grounded properly. A noise filter can be added if necessary.

■ Anti-interference wiring example

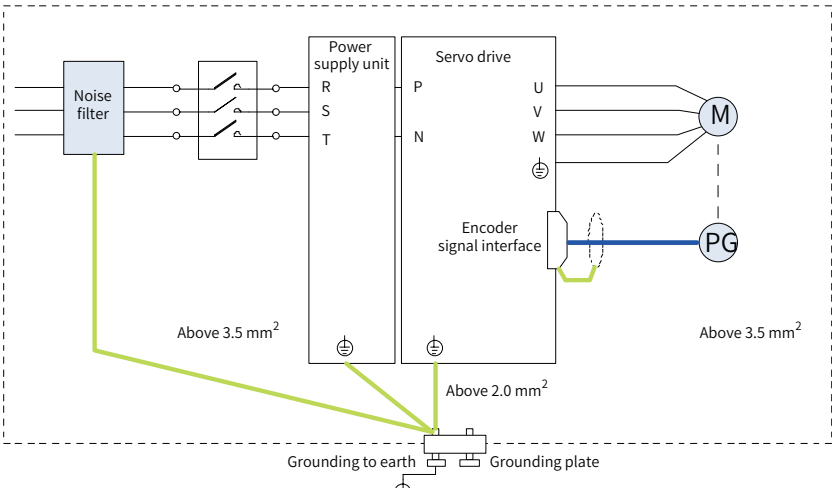

Figure 3-33 Anti-interference wiring example

For the grounding of the cabinet enclosure, use a cable thicker than 3.5 mm^2. Braided copper cables are recommended.

If a noise filter is used, abide by the requirements in "Use of the Noise Filter".

■ Grounding

To prevent potential electromagnetic interference, ground the devices properly according to the follow-

ing instructions.

■ Grounding the enclosure of the servo motor

Connect the grounding terminal of the servo motor to the PE terminal of the servo drive, and ground the PE terminal properly to minimize potential electromagnetic interference.

■ Grounding the shield of the encoder cable

Tie the shield of the motor encoder cable to ground at both ends.

3.10.2 Use of the Noise Filter

To prevent interference from the power cable and reduce the impact of the servo drive on other sensitive devices, install a proper noise filter on the input side of the power supply based on the input current. In addition, install a noise filter on the power cable of peripheral devices if necessary. To ensure the performance of the noise filter, abide by the following requirements when installing and wiring the noise filter.

■ Do not place the input and output cables of the noise filter in the same duct or bundle them together.

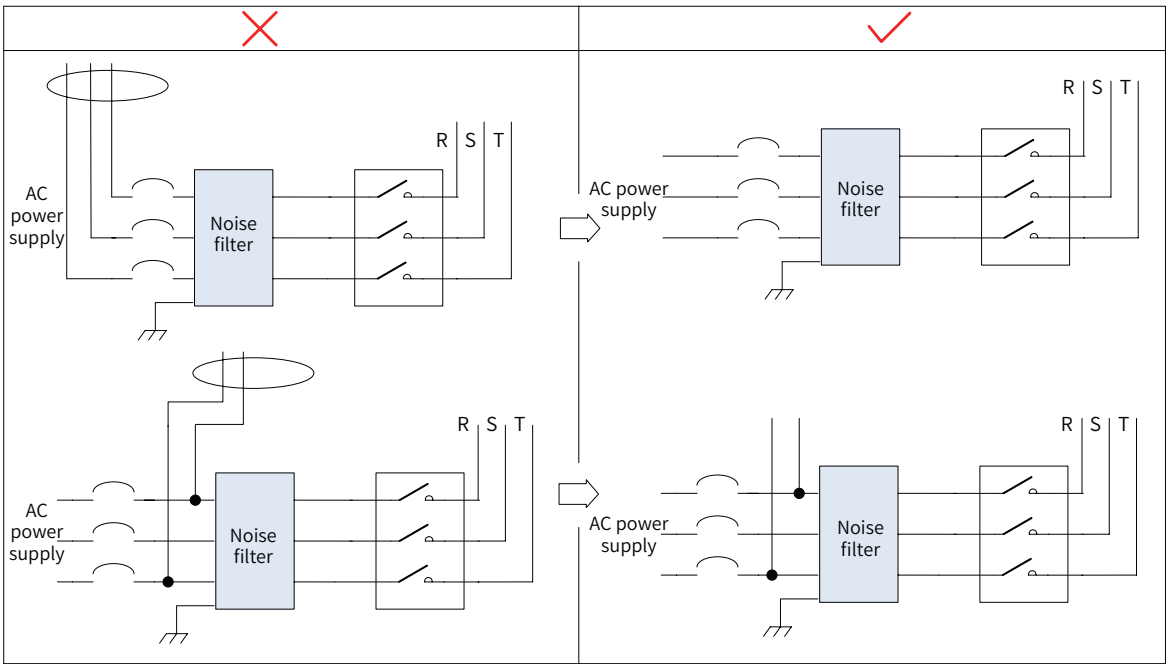

Figure 3-34 Separate routing of input and output cables of the noise filter

Route the grounding cable and the output power cable of the noise filter separately.

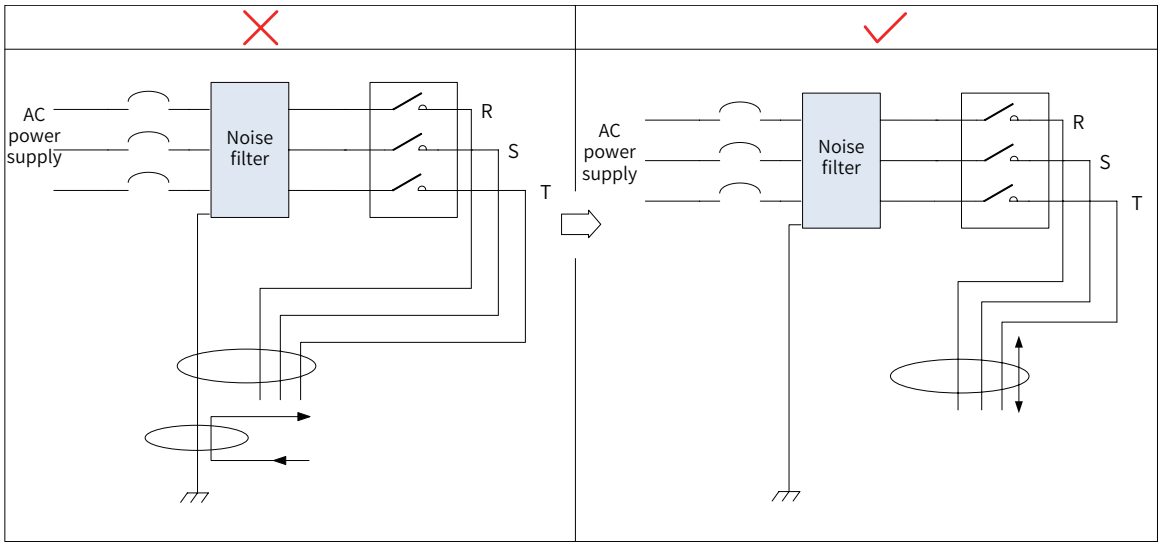

Figure 3-35 Separate routing of the grounding cable and the output cable of the noise filter

■ Use a separate grounding cable as short and thick as possible for the noise filter. Do not share the grounding cable with other grounding devices.

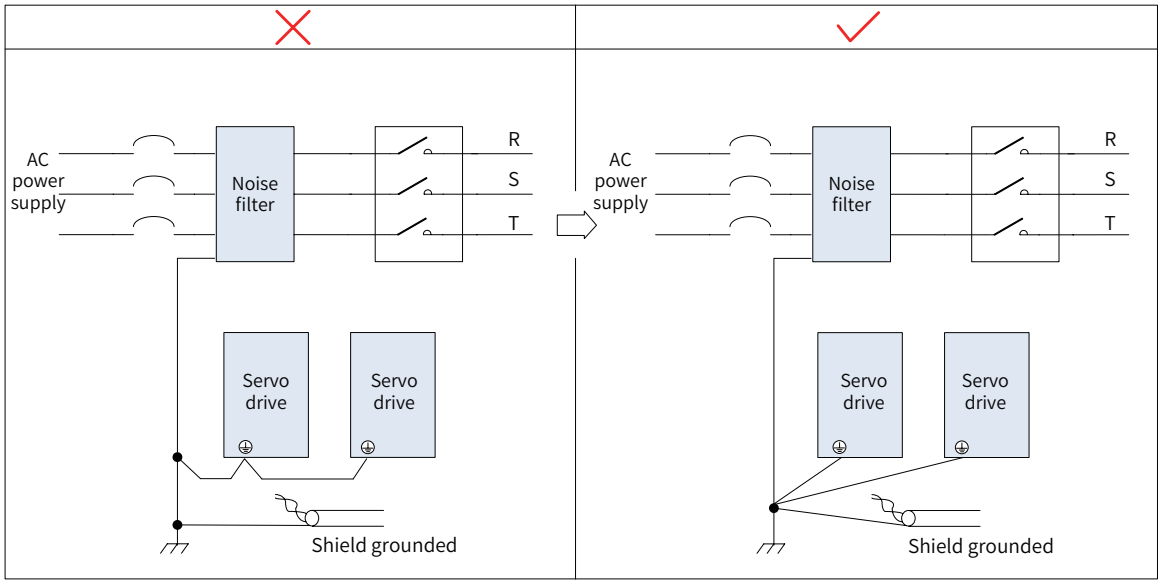

Figure 3-36 Single-point grounding

■ Ground the noise filter inside the control cabinet

If the noise filter and the servo drive are installed in the same control cabinet, fix the noise filter and the servo drive on the same metal plate. Make sure that the contact part is in good conductive condition and ground the metal plate properly.

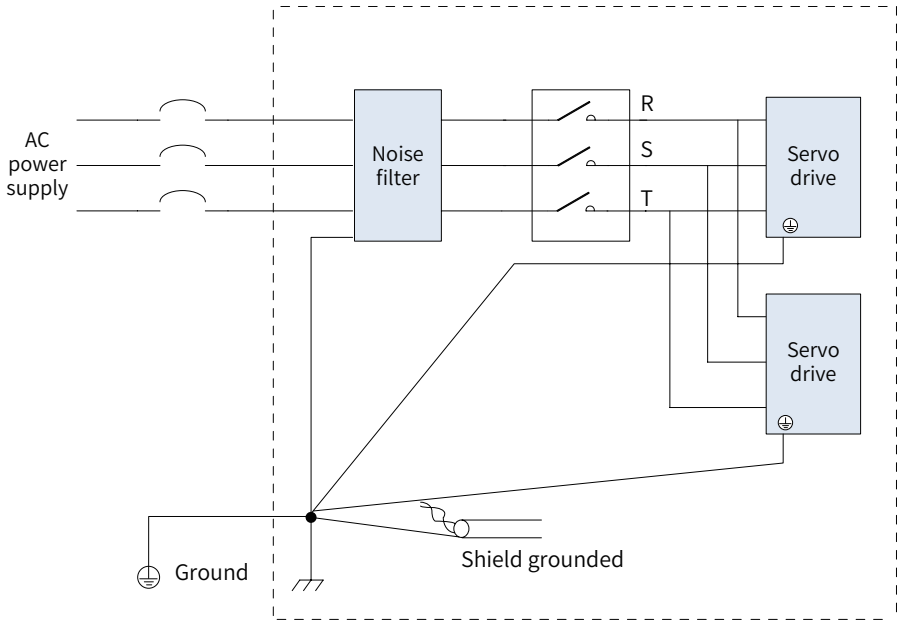

Figure 3-37 Grounding of the noise filter

3.11 Precautions of Using Cables

1) Do not bend cables or apply tension to them. The conductor of a signal cable is only 0.2 mm or 0.3 mm in diameter. Handle the cables carefully to prevent fracture.
2) In cases where cables need to be moved, use flexible cables. Ordinary cables may be easily damaged after being bent for a long time. Cables provided together with low-power servo motors must not be moved.
3) If a cable drag chain is used, ensure that the following requirements are met.
4) The bending radius of the cable is at least 10 times its outer diameter.
5) Do not fix or bundle the cables inside the cable drag chain. The cables can be bundled and fixed only at two unmovable ends of the cable drag chain.
6) Do not wind or twist the cable.
7) The space factor inside the cable drag chain cannot exceed 60%.
8) Do not mix cables with great differences in size. This is to prevent thin cables from being crushed by the thick cables. To use them together, place a spacer between them.

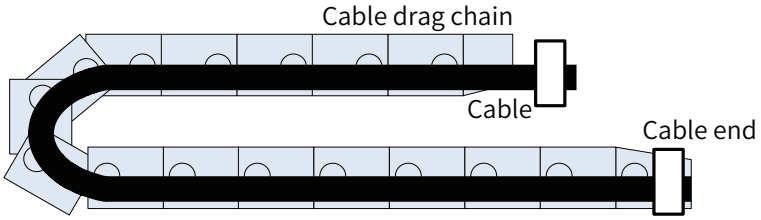

Figure 3-38 Cable drag chain

3.12 Overall Wiring Diagram

See Appendix C "Overall Wiring Diagram".

[Note 1]: Use Cat 5e shielded twisted-pair Ethernet cables for network interfaces, either direct connection or crosswise connection.

[Note 2]: The voltage range of the internal +24 V power supply is 20 V to 28 V, with maximum operating current being 200 mA.

[Note 3]: HDI4 and HDI8 are high-speed DIs. Use them according to their functions allocated. For low-speed applications, set the corresponding parameters to increase the internal filter parameter values.

[Note 4]: The DO power supply (voltage range: 5 V to 24 V) needs to be prepared by users. The DO terminals support a maximum voltage of 30 VDC and a maximum current of 50 mA.

[Note 5]: Use shielded twisted pairs as encoder frequency-division output cables, with both ends of the cable shield connected to PE. Connect GND to the signal ground of the host controller properly.

[Note 6]: The internal +5 V power supply supports a maximum current of 200 mA.

Chapter 4 Operating Panel Operations

WARNING

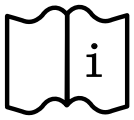

◆ Read content in Safety Precautions carefully. Failure to comply may cause serious consequences.

DANGER



◆ Do not touch rotating parts when the motor is running. Failure to comply may cause physical injury.

DANGER



◆ Do not touch any terminal when the device is running. Failure to comply may cause physical injury.

WARNING



◆ When the motor is not connected with the transmission shaft (no-load state), do not perform trial run. Failure to comply may cause physical injury.

◆ Do not use the motor brake to stop or brake the motor. Failure to comply may cause physical injury.

◆ When the motor is installed on a mechanical device, ensure that the motor can enter the emergency stop state anytime. Failure to comply may cause physical injury.

◆ Ensure an interval of at least one minute between turn-on and turn-off of the power supply. Failure to comply may cause product fault.

◆ When an alarm is triggered, locate the cause and then reset the alarm after ensuring the safety. Failure to comply may cause physical injury.

◆ Do not adjust or change parameter limits. Failure to comply may cause physical injury due to servo system instability.

CAUTION



◆ If the power supply is resumed immediately after a power failure, the device may suddenly run again. Do not approach the device in this case.

◆ Set parameters applicable to the device. Failure to comply may cause out-of-control or damage to the product.

◆ The P-OT and N-OT signals are inactive during homing.

◆ In case of overtravel, stop and lock the servo drive. Failure to comply may cause physical injury doe to workpiece fall-off.

◆ When online auto-tuning is not used, set the correct load inertia ratio. Failure to comply may cause vibration.

CAUTION



◆ Do not touch the servo drive heatsink, external braking resistor, and motor enclosure immediately after power-on or power off to avoid burning by high temperature.

4.1 Panel Components

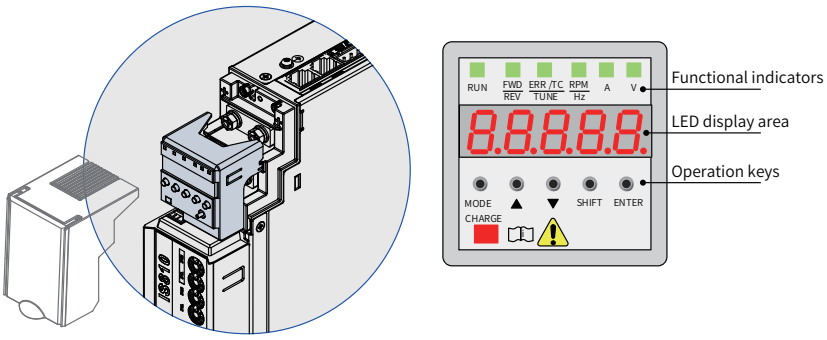

Figure 4-1 Magnified view of the operating panel

The operating panel of the IS810P servo drive consists of the 5-digit 8-segment LEDs and keys. The operating panel is used for value display, parameter setting, user password setting, and general function execution. When the operating panel is used for parameter setting, the functions of the keys are as follows.

Table 4-1 General functions of keys

Name	Description
MODE	Switches among different modes Returns to the previous menu
UP	Increases the value of the blinking digit for the LED
DOWN	Decreases the value of the blinking digit for the LED
SHIFT	Shifts the blinking LED digit Turns to the high-bit page if a value includes more than 5 digits
SET	Switches to the lower-level menu Executes commands such as saving parameter settings

4.2 Operating Panel Display

The operating panel can be used to display the servo drive status, parameters, faults, and monitored values.

- Status display: Displays the current servo drive status, such as servo ready or servo running.
- Parameter display: Displays the parameters and their values.
- Fault display: Displays faults and warnings that occurred on the servo drive.
- Monitored value display: Displays values of monitoring parameters.

4.2.1 Display Mode Switchover

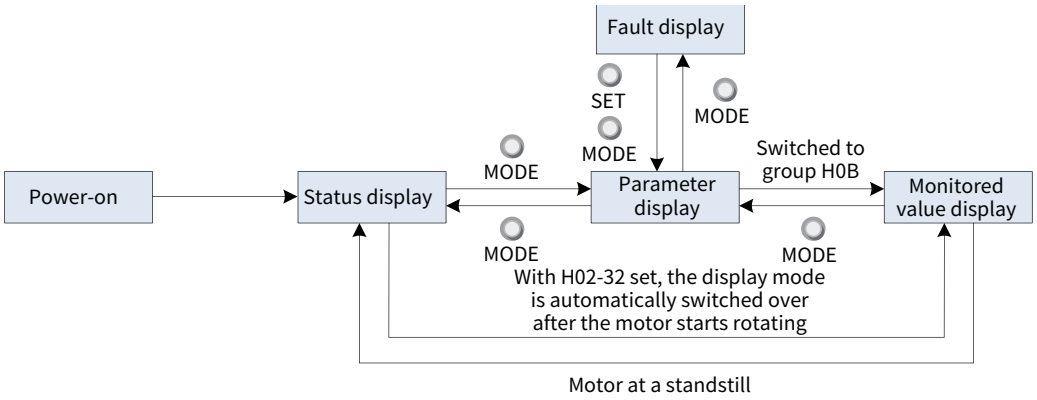

Figure 4-2 Switchover among different display modes

- The operating panel enters status display immediately upon power-on.
- Press MODE to switch among different display modes based on the conditions shown in the preceding figure.
- In the status display mode, set H02-32 to select the parameter to be monitored. When the motor rotates, the operating panel automatically switches to monitored value display. After the motor stops, the operating panel automatically returns to status display.
- In the parameter display mode, after you select the parameter to be monitored in group H0B, the operating panel switches to monitored value display.
- Once a fault occurs, the operating panel switches to fault display immediately, with all the five LEDs blinking. Press SET to stop the LEDs from blinking, and then press MODE to switch to parameter display.

4.2.2 Status Display

Display	Name	Applicable Occasion	Meaning
rESEt	Reset Servo initializing	At the moment upon power-on	The servo drive is in the initialization or reset state. After initialization or reset is done, the servo drive automatically switches to other status.
nrd	Nrd Servo not ready	Initialization done, but servo drive not ready	The servo drive is not ready to run because the main circuit is not powered on. For details, see "Chapter 11 Troubleshooting".
rdy	Rdy Servo ready	Servo drive ready	The servo drive is ready to run and is waiting for the S-ON signal from the host controller.
run	Run Servo running	Servo ON (S-ON) signal activated (S-ON signal switched on)	The servo drive is running.
Jog	Jog Jogging	Servo drive in jog status	For details, see "5.1.3 Jogging".

4.2.3 Parameter Display

Parameters of the IS810P series servo drive are divided into 19 groups based on their functions. A param-

eter can be located quickly based on the parameter group it belongs to. For list of parameters, see"*Chapter 10 Parameter List*".

■ Display of parameter group

Display	Name	Content
HXX.YY	Parameter group	XX: Parameter group No. YY: Offset within the parameter group

For example, H02-00 is displayed as follows.

Display	Name	Content
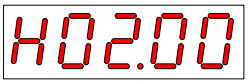	H02-00	02: Parameter group No. 00: Offset within the parameter group

■ Display of negative numbers and numbers with different lengths

① Signed number consisting of 4 or fewer digits or unsigned number consisting of 5 or fewer digits

Such numbers are displayed on a single page (five digits). For signed numbers, the highest bit "–" represents the negative symbol.

For example, –9999 is displayed as follows:

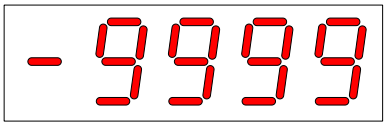

For example, 65535 is displayed as follows:

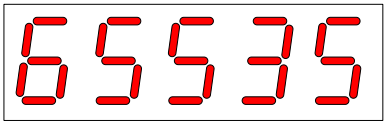

② Signed number consisting of more than 4 digits or unsigned number consisting of more than 5 digits

Such numbers are displayed from low to high bits on several pages (5 digits per page) in the format of current page + values on current page, as shown in the following figure. Hold down SHIFT for more than 2s to turn to the next page.

For example, –1073741824 is displayed as follows:

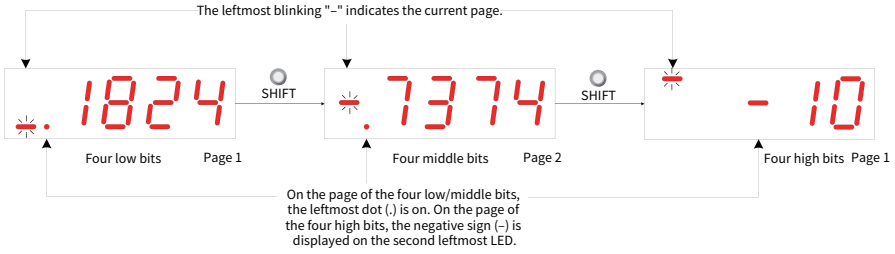

Figure 4-3 Display of –1073741824

Example: 1073741824 is displayed as follows:

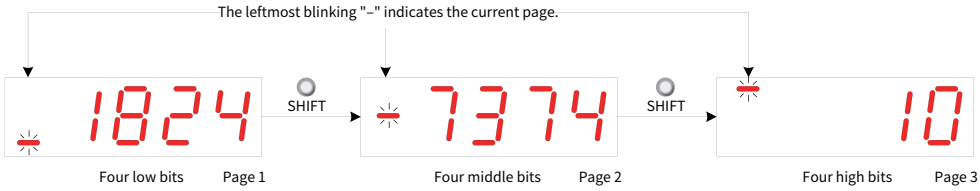

Figure 4-4 Display of 1073741824

■ Display of the decimal point

The segment "." of the ones position indicates the decimal point, which does not blink.

Display	Name	Content
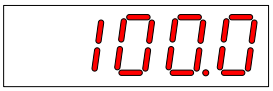	Decimal point	100.0

1) Display of parameter setting status

Display	Name	Applicable Occasion	Meaning
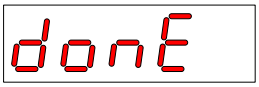	Done (parameter setting done)	The parameter is set successfully.	The parameter is set and saved to the servo drive (Done). The servo drive can execute other operations.
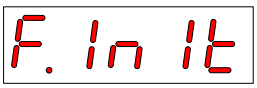	F.InIt (restored to default)	Parameter initialization is in progress (H02-31 set to 1).	The servo drive is in the process of function code initialization. Switch on the control circuit again after initialization is done.
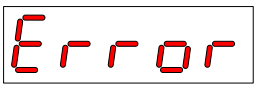	Error (incorrect password)	The user password (H02-30) is enabled, but the password entered is incorrect.	An incorrect password is entered. You need to enter the password again.

4.2.4 Fault Display

■ The operating panel can be used to display present and previous faults and warning codes. For analysis and solutions to the faults and warnings, see *"Chapter 11 Troubleshooting"*.

■ When a single fault or warning occurs, the operating panel displays the fault or warning code. When multiple faults or warnings occur, the operating panel displays the fault code of the highest level.

■ You can select the previous fault/warning to be viewed through H0B-33 and view the code of the selected fault/warning in H0B-34.

■ You can clear the latest 10 faults or warnings saved in the servo drive by setting H02-31 to 2.

For example, Er.941 is displayed as follows.

Display	Name	Content
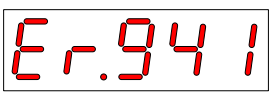	Warning code	Er: A fault or warning occurs on the servo drive. 941: Warning code

4.2.5 Monitored Value Display

Group H0B: Displays parameters used to monitor the operating state of the servo drive.

Set H02-32 (Default keypad display) properly. After the servo motor operates normally, the operating panel switches from status display to parameter display. The parameter group number is H0B and the offset within the group is the setpoint of H02-32.

For example, if H02-32 is set to 00 and the servo motor speed is not 0 RPM, the operating panel displays the value of H0B-00.

The following table describes the monitoring parameters in group H0B.

Para.	Name	Unit	Meaning	Example of Display
H0B-00	Actual motor speed	RPM	Displays the actual value of the servo motor speed after round-off, which can be accurate to 1 RPM.	Display of 3000 RPM: 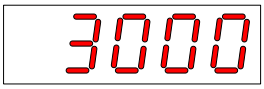 Display of –3000 RPM: 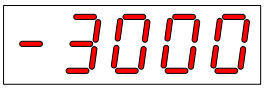
H0B-01	Speed reference	RPM	Displays the current speed reference of the servo drive.	Display of 3000 RPM: 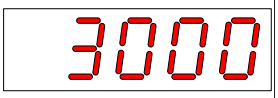 Display of –3000 RPM: 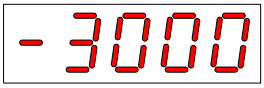
H0B-02	Internal torque reference	0.1%	Displays the ratio of actual torque output of the servo motor to the rated torque of the servo motor.	Display of 100.0%: 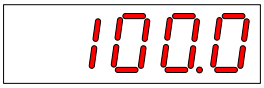 Display of –100.0%: 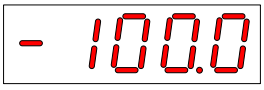
H0B-03	Monitored DI status	-	Indicates the level status of DI1 to DI9: Upper LED segments ON: high level (indicated by "1") Lower LED segments ON: low level (indicated by "0") The value of H0B-03 read in the software tool is a decimal.	For example, if DI1 is low level and DI2 to DI9 are high level, the binary value is "111111110", and the value of H0B-03 read in the software tool is 510. The operating panel displays as follows: 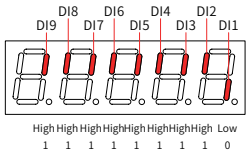

Para.	Name	Unit	Meaning	Example of Display
H0B-05	Monitored DO status	-	Indicates the level status of DO1 to DO5: Upper LED segments ON: high level (indicated by "1") Lower LED segments ON: low level (indicated by "0") The value of H0B-05 read in the software tool is a decimal.	For example, if DO1 is low level and DO2 to DO5 are high level, the binary value is "11110", and the value of H0B-05 read in the software tool is 30. The operating panel displays as follows: 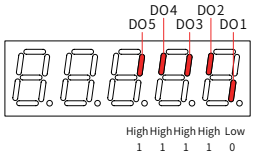
H0B-07	Absolute position counter (32-bit decimal number)	Reference unit	Displays the current absolute position of the motor (reference unit).	Display of 1073741824 in reference unit: 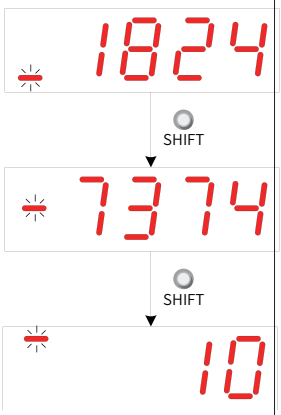
H0B-09	Mechanical angle (pulses starting from the home)	p	Indicates the present mechanical angle (p) of the motor. The value 0 indicates that the mechanical angle is 0° . Maximum value of H0B-09 for an incremental encoder: Number of encoder pulses per revolution x 4 – 1. For example, the maximum value of H0B-09 for a 2500-PPR incremental encoder is 9999. Maximum value of H0B-09 for an absolute encoder is 65535. The actual mechanical angle is calculated using the following formula: 0B-09 max. value + 1	Display of 10000 p: 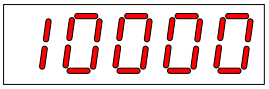
H0B-10	Rotation angle (electrical angle)	°	Displays the current electrical angle of the motor.	Display of 360.0° : 

Para.	Name	Unit	Meaning	Example of Display
H0B-11	Speed corresponding to the position reference	RPM	Displays the speed corresponding to the position reference per control cycle of the servo drive.	Display of 3000 RPM: 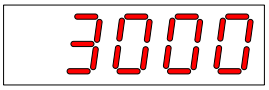 Display of –3000 RPM: 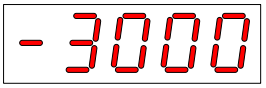
H0B-12	Average load ratio	0.1%	Displays the ratio of the average load torque to the rated torque of the motor.	Display of 100.0%: 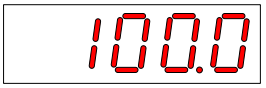
H0B-13	Input position reference counter (32-bit decimal number)	Reference unit	Counts and displays the number of input position references.	Display of 1073741824 in reference unit: 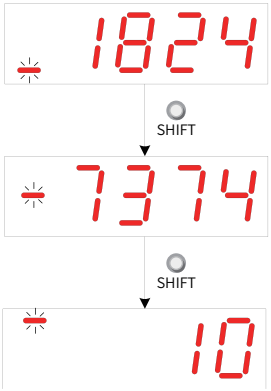
H0B-15	Encoder position deviation counter (32-bit decimal number)	Encoder unit	Encoder position deviation = Sum of input position references (encoder unit) – Sum of pulses fed back by the encoder (encoder unit)	Display of 10000 in encoder unit: 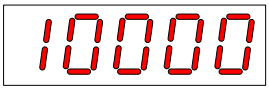
H0B-17	Feedback pulse counter (32-bit decimal number)	Encoder unit	Counts and displays the number of pulses fed back by the encoder (encoder unit).	Display of 1073741824 in encoder unit: 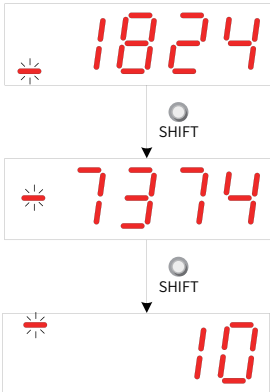

Para.	Name	Unit	Meaning	Example of Display
H0B-19	Total power-on time (32-bit decimal number)	0.1s	Counts and displays the total power-on time of the servo drive.	Display of 429496729.5s: 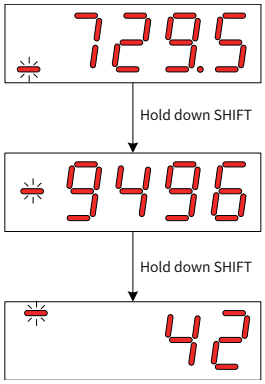
H0B-21	AI1 sampling voltage	0.01 V	Displays the voltage of analog input 1.	Display of 10.00 V:  Display of –10.00 V: 
H0B-22	AI2 sampling voltage	0.01 V	Displays the voltage of analog input 2.	Display of 10.00 V:  Display of –10.00 V: 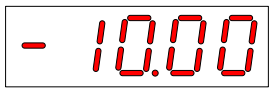
H0B-24	RMS value of phase current	0.01 A	Displays the RMS value of the phase current of the servo motor.	Display of 4.60 A: 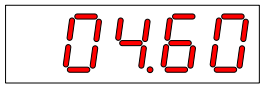
H0B-26	Bus voltage	0.1 V	Displays the DC bus voltage of the main circuit, that is, the voltage between P ⊕ and N–.	Display of 311.0 V rectified from 220 VAC:  Display of 537.0 V rectified from 380 VAC: 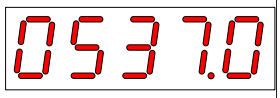
H0B-27	Module temperature	°C	Displays the temperature of the power module inside the servo drive.	Display of 27°C: 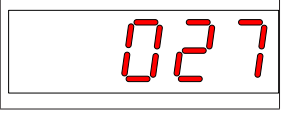

Para.	Name	Unit	Meaning	Example of Display
H0B-33	Fault log	-	Used to select the previous fault to be viewed. 0: Current fault 1: Last fault 2: Last 2nd fault ... 9: Last 9th fault	Display of 0 (Current fault): 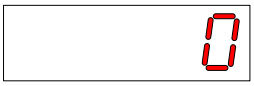
H0B-34	Code of the selected fault	-	Displays the code of the fault selected in H0B-33. When no fault occurs, the value of H0B-34 is Er.000.	If H0B-33 is 0 and H0B-34 is Er.941, the current fault code is 941. The display is: 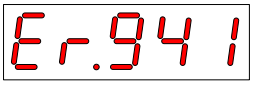
H0B-35	Time stamp upon occurrence of the selected fault	s	Displays the total operating time of the servo drive when the fault displayed in H0B-34 occurred. When no fault occurs, the value of H0B-35 is 0.	If H0B-34 is displayed as Er.941 and H0B-35 is displayed as 107374182.4, the present fault code is 941 and the total operating time of the servo drive is 107374182.4s when the fault occurs. 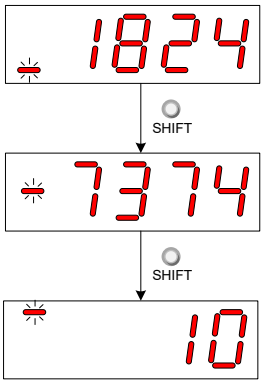
H0B-37	Motor speed upon occurrence of the selected fault	RPM	Displays the speed of the servo motor when the fault displayed in H0B-34 occurred. When no fault occurs, the value of H0B-37 is 0.	Display of 3000 RPM: 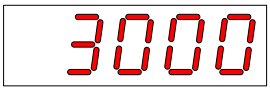 Display of –3000 RPM: 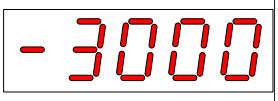
H0B-38	Motor phase U current upon occurrence of the selected fault	0.01 A	Displays the RMS value of motor phase U winding current when the fault displayed in H0B-34 occurred. When no fault occurs, the value of H0B-38 is 0.	Display of 4.60 A: 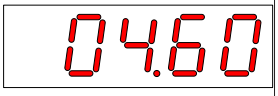
H0B-39	Motor phase V current upon occurrence of the selected fault	0.01 A	Displays the RMS value of motor phase V winding current when the fault displayed in H0B-34 occurred. When no fault occurs, the value of H0B-39 is 0.	Display of 4.60 A: 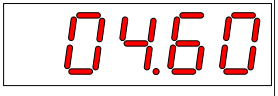

Para.	Name	Unit	Meaning	Example of Display
H0B-40	Bus voltage upon occurrence of the selected fault	V	Displays the DC bus voltage of the main circuit when the fault displayed in H0B-34 occurred. When no fault occurs, the value of H0B-40 is 0.	Display of 311.0 V rectified from 220 VAC: 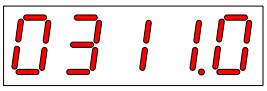 Display of 537.0 V rectified from 380 VAC: 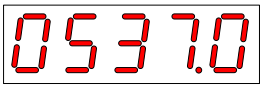
H0B-41	Input terminal status upon occurrence of the selected fault	-	Displays the high/low level status of DI1 to DI9 when the fault displayed in H0B-34 occurred. The method for determining the DI level status is the same as that of H0B-03. When no fault occurs, all DIs are displayed as low level in H0B-41 (indicated by the decimal value 0).	Display when H0B-41 is 431: 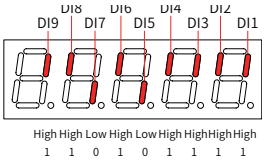
H0B-42	Output terminal status upon occurrence of the selected fault	-	Displays the high/low level status of DO1 to DO5 when the fault displayed in H0B-34 occurred. The method for determining the DO level status is the same as that of H0B-05. When no fault occurs, all DOs are displayed as low level in H0B-42 (indicated by the decimal value 0).	Display when H0B-42 is 15: 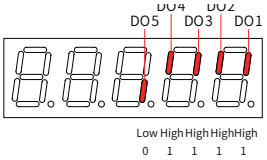
H0B-53	Position deviation counter (32-bit decimal number)	Reference unit	Position deviation = Sum of input position references (reference unit) – Sum of pulses fed back by the encoder (reference unit) Note: Position deviation (reference unit) is the value obtained after encoder position deviation calculation. The precision is compromised during division.	Display of 10000 in reference unit: 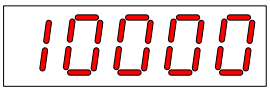

Para.	Name	Unit	Meaning	Example of Display
H0B-55	Actual motor speed	0.1 RPM	Displays the actual value of the motor speed, which can be accurate to 0.1 RPM.	Display of 3000.0 RPM: 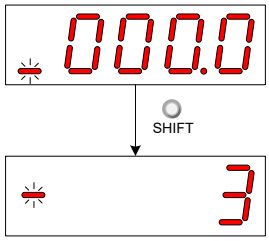 Display of –3000.0 RPM: 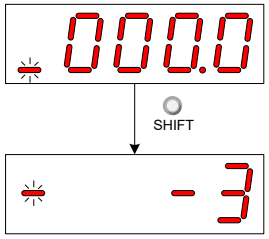
H0B-64	Real-time position reference counter	Reference unit	Displays the value of the position reference counter before being divided or multiplied by the electronic gear ratio. This value is independent of the servo drive status and the control mode.	Display of 1073741824 in reference unit: 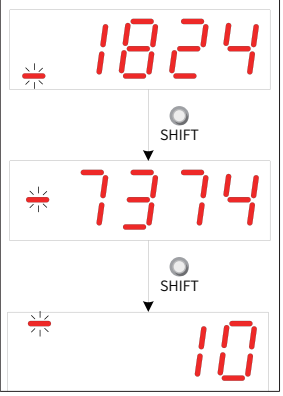

4.3 Parameter Setting

You can set parameters through the operating panel. For parameter details, see Chapter 8. The following figure shows how to switch from position control mode to speed control mode by using the operating panel after power-on.

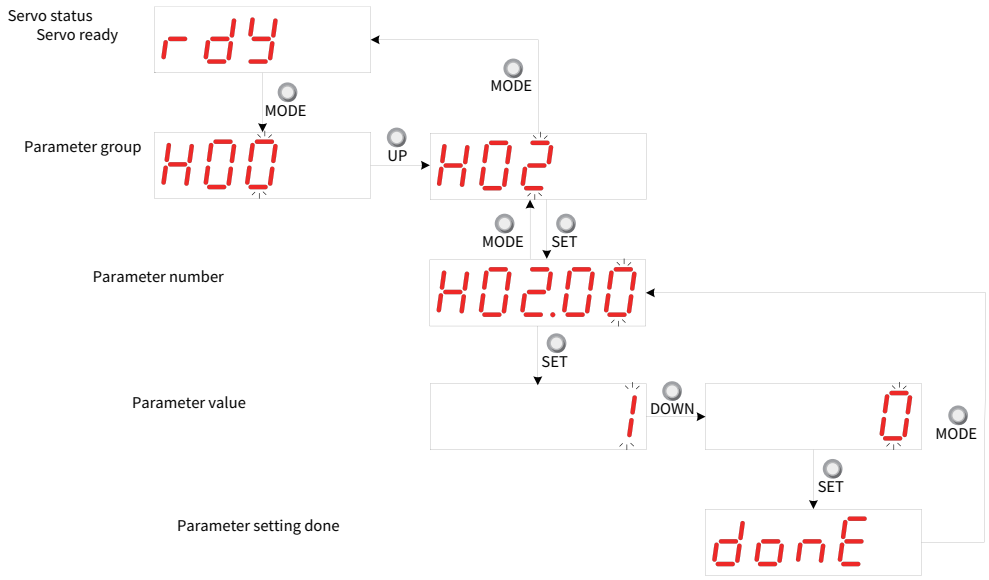

Figure 4-5 Example of parameter setting

- MODE: Used to switch the operating panel display mode and return to the previous interface
- UP/DOWN: Used to increase or decrease the value of the blinking bit
- SHIFT: Used to shift the blinking bit
- SET: Used to save the present setpoint or switch to the next interface

After parameter setting is done, that is, "donE" is displayed on the operating panel, press MODE to return to the parameter interface (interface of "H02-00").

4.4 User Password

After the user password (H02-30) is enabled, only authorized operators can set parameters.

1) Setting the user password

The following figure shows how to set the user password to "00001".

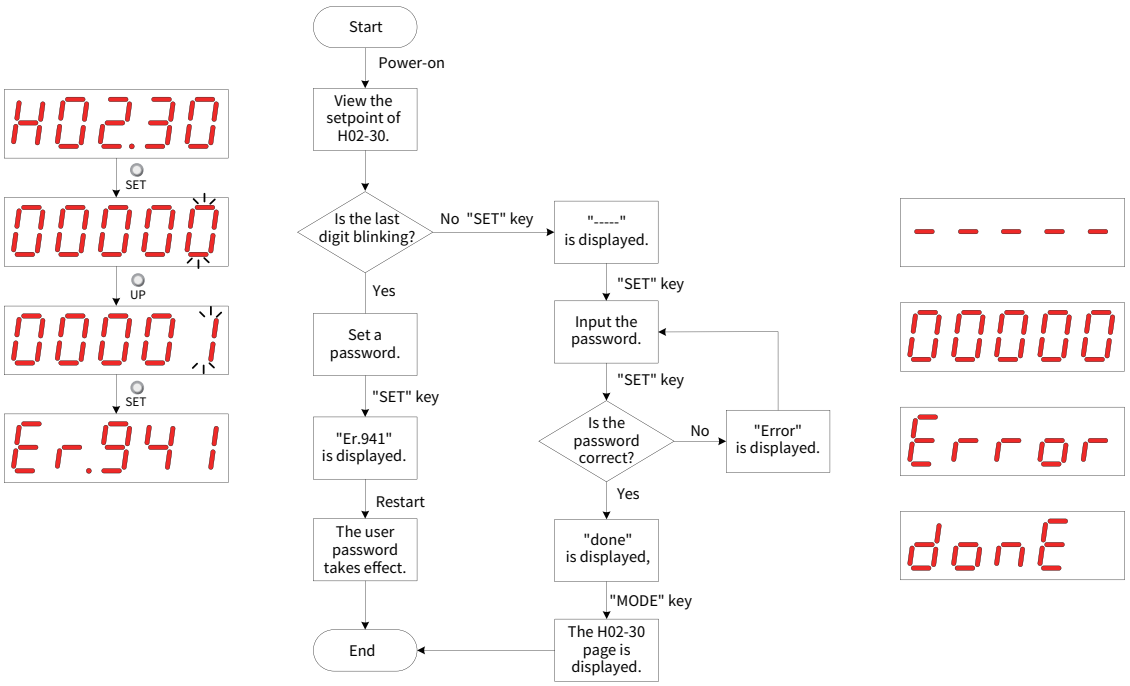

Figure 4-6 Procedure for setting the user password

To change the user password, input the current password first to authorize the access to parameter setting. Next, enter H02-30 again to set a new password based on the procedure shown in the preceding figure.

NOTE

◆ If the last digit does not blink, password protection is enabled. If the last digit blinks, password is not set or the correct password has been entered.

2) Canceling the user password

Enter the set user password, and set H02-30 to "00000" to cancel the user password.

4.5 Common Functions

4.5.1 Jogging

CAUTION

◆ To use the jogging function, deactivate the S-ON signal. Otherwise, this function cannot be used.

Use the jogging function for trial run of servo motor and servo drive.

1) Operation method

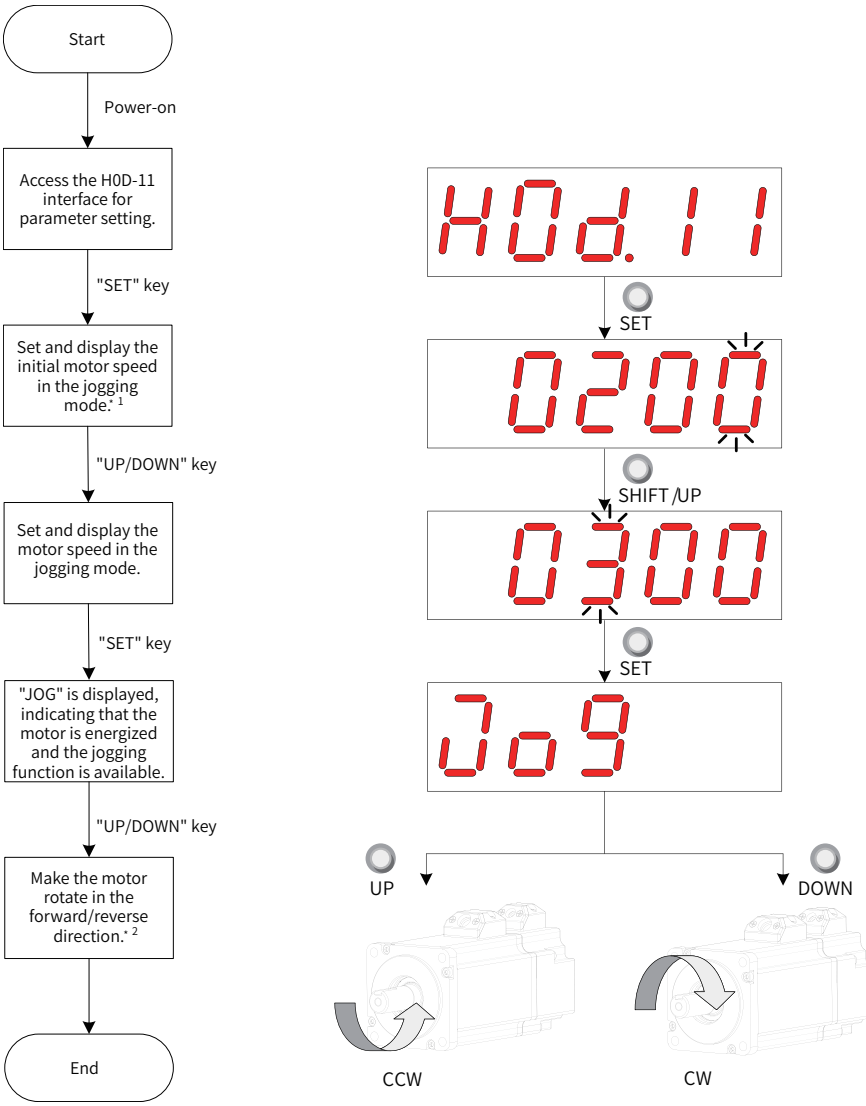

Figure 4-7 Procedure for setting the jogging function

■ Press the key UP or DOWN to increase or decrease the motor speed for the jog running. If the system exits jog running, the motor speed restores to the initial value.

■ Press the key UP or DOWN to make the servo motor rotate in the forward or reverse direction. After the key is released, the servo motor stops running immediately.

2) Exiting jog running

Press the MODE key to exit the jog running and return to the upper-level menu.

4.5.2 Forced DI/DO Signals

You can assign different functions to digital input (DI) and digital output (DO) signals by setting parameters in groups H03 and H04 through the operating panel or host controller, so that the host controller can control the servo functions through DI signals or use the DO signals output by the servo drive.

The servo drive also provides forced DIs/DOs. The forced DIs can be used to test the DI function of the servo drive, and the forced DOs can be used to check the DO signal connection between the host controller and the servo drive.

When the forced DI/DO function is used, the logic of both physical DIs and virtual DIs is determined by the forced DI.

1 Forced DI signal

After this function is enabled, all DI signal levels are controlled by the forced DI setting (H0D-18), independent of external DI signal status.

1) Operation method

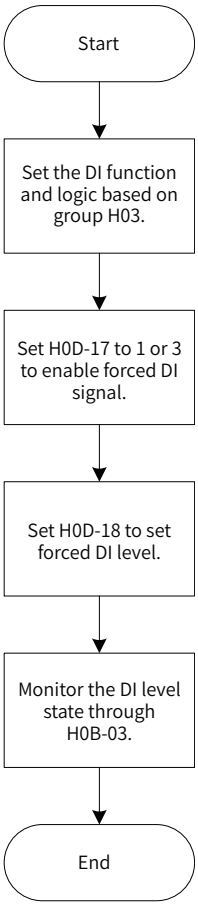

Figure 4-8 Procedure for setting forced DI function

☆ Related parameters:

Para.	Name	Value Range	Function	Setting Condition	Effective Time	Default
H0D-17	Forced DI/DO selection	0: No operation 1: Forced DI enabled, forced DO disabled 2: Forced DO enabled, forced DI disabled 3: Forced DI and DO enabled	Forced DI/DO selection	During operation	Immediately	0

H0D-18 is used to set the forced DI level. The operating panel displays the value in hexadecimal. After the hexadecimal value is converted to a binary value, the value "1" indicates high level and "0" indicates low level.

The DI logic is defined by parameters in group H03. H0B-03 is used to monitor the DI level status. The operating panel displays the level, and the value of H0B-03 read in the software tool is decimal.

Example:

To activate the functions assigned to DI1 and deactivate the functions assigned to DI2 to DI9, set as follows: (The nine DIs are active at low level.)

As the value "1" indicates high level and the value "0" indicates low level, the corresponding binary value and hexadecimal value are "111111110" and "1FE" respectively. Therefore, set H0D-18 to "1FE" through the operating panel.

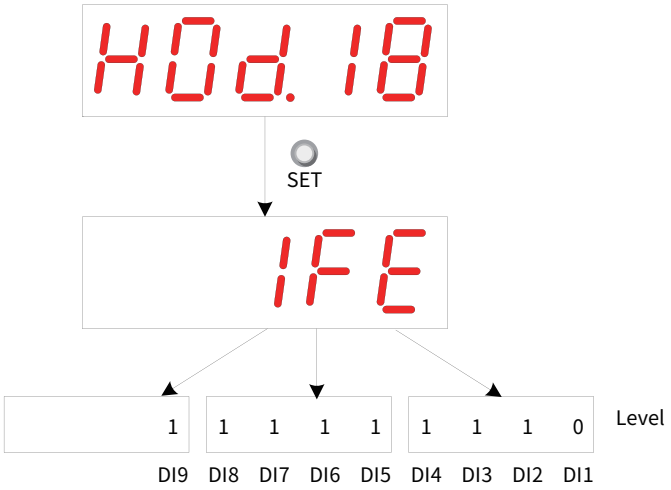

Figure 4-9 Setpoints of H0D-18

Monitor the DI level status through H0B-03:

If the DI function is normal, the display value of H0B-03 is always the same as that of H0D-18.

In this case, DI1 is displayed as low level and DI2 to DI9 are displayed as high level on the operating panel, and the value of H0B-03 read by the software tool is 510 (decimal). The operating panel displays as follows:

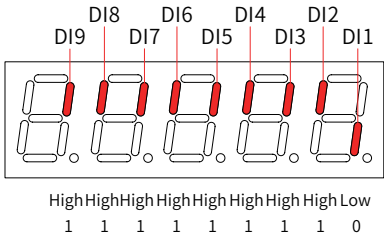

Figure 4-10 DI level status corresponding to H0B-03

2) Exiting the forced DI function

The forced DI function is not retentive upon power failure. Normal DIs apply after restart, or you can set H0D-17 to 0 to return to the normal DI mode.

2 Forced DO signal

After this function is enabled, all DO signal levels are controlled by the forced DO setting (H0D-19), independent of internal DO signal status.

CAUTION	
	In applications where the servo motor is used for vertical movement, if the brake output signal (FunOUT.9: BK, brake output) is active, the brake will be released and the load may fall. Take protective measures on the machine to prevent the risk of falling.

1) Operation method

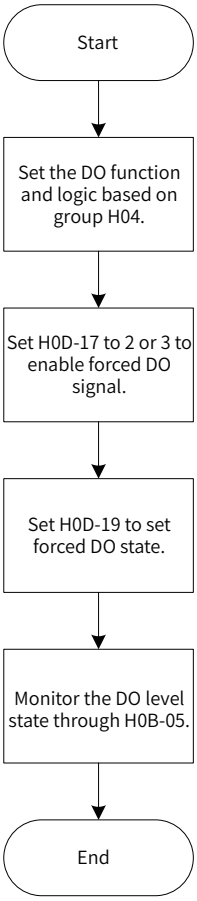

Figure 4-11 Procedure for setting forced DO function

H0D-19 is used to set whether the DO function is active. The operating panel displays the value in hexadecimal. After the hexadecimal value is converted to a binary value, the value "1" indicates the DO function is active and "0" indicates the DO function is inactive.

Parameters in group H04 are used to set the DO logic. H0B-05 is used to monitor the DO level status. The operating panel displays the level, and the value of H0B-05 read in the software tool is decimal.

Example: To deactivate the function assigned to DO1 and activate the functions assigned to DO2 to DO5, set as follows.

As the value "1" indicates the DO function is active and the value "0" indicates the DO function is inactive, the corresponding binary value and hexadecimal value are "11110" and "1E" respectively. Therefore, set H0D-19 to "1E" through the operating panel.

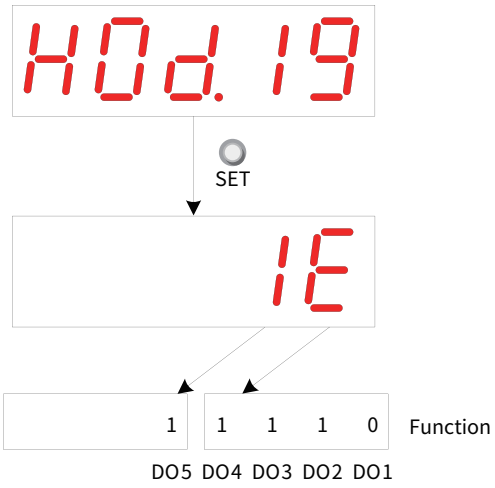

Figure 4-12 Setpoints of H0D-19

Monitor the DO level status through H0B-05:

If the logic of all the five DOs is "active low", then DO1 is high level and DO2 to DO5 are low level, the corresponding binary number is "00001" and the value of H0B-05 read in the software tool is "1" (decimal). The operating panel displays as follows:

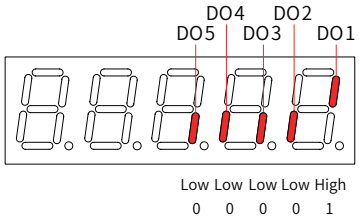

Figure 4-13 Display of H0B-05 when all DOs are "active low"

If the logic of all the five DOs is "active high", then DO1 is low level and DO2 to DO5 are high level, the corresponding binary number is "11110" and the value of H0B-05 read in the software tool is "30" (decimal). The operating panel displays as follows:

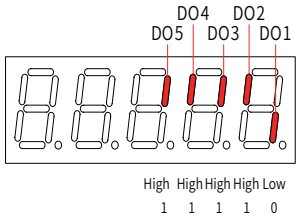

Figure 4-14 Display of H0B-05 when all DOs are "active high"

2) Exiting the forced DO function

The forced DO function is not retentive upon power failure. Normal DOs apply after restart, or you can set H0D-17 to 0 to return to the normal DO mode.

4.6 Basic Operation and Trial Run

4.6.1 Checklist Before Power-on

Re-cord	No.	Content
Wiring		
□	1	The main circuit output terminals U, V, W of the servo drive and the main circuit cables U, V, W of the servo motor are of the same phases and are connected correctly.
□	2	The PN copper busbar of the servo drive is not short-circuited.
□	3	The control signal cables of the servo drive are connected correctly. External cables for brake and overtravel protection are connected properly.
□	4	The servo drive and servo motor are grounded reliably.
□	5	The stress of all cables is within the specified range.
□	6	Wiring terminals are insulated.
Environmental and mechanical factors		
□	1	There are no foreign objects such as wire ends and metal chips, which may cause short circuit of signal cables and power cables, inside and outside the servo drive.
□	2	The servo drive and external braking resistor are not placed on combustible objects.
□	3	The servo motor and its axes are installed and mechanically connected reliably.
□	4	The servo motor and devices connected to the servo motor can run normally.

4.6.2 Checklist After Power-on

After power-on, the power supply unit keypad displays the following information.

Status	Display	Description
Normal		The digital setpoint 50.00 Hz is displayed by default.
When a fault occurs		In the case of fault, the servo drive stops running and the fault type is displayed.
When an alarm occurs		In the case of alarm, the servo drive stops running and the alarm type is displayed.

After power-on, the drive unit keypad displays the following information.

Status	Display	Description
Normal		When the servo drive runs properly, "rdy" is displayed.
When a fault or alarm occurs		In the case of fault or alarm, the servo drive stops running and the fault or alarm type is displayed.
Operation		When the servo drive is running, "run" is displayed.

Chapter 5 Control Modes

The servo system consists of three major parts: servo drive, servo motor, and encoder.

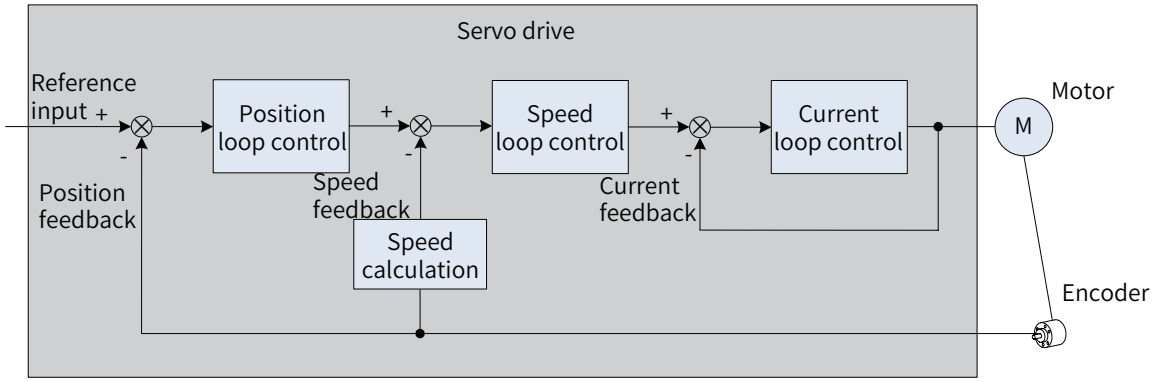

Figure 5-1 Control block diagram of servo system

As the control core of the servo system, the servo drive performs accurate position, speed, torque, or hybrid control on the servo motor by processing input signals and feedback signals. Position control is the most important and common mode of the servo system.

The control modes are described as follows:

In the position control mode, the servo drive controls the motor position based on position references. The position reference sum determines the target motor position and the position reference frequency determines the motor speed. Position references can be input through external pulses or internal position reference sum plus speed limit. With the use of the internal encoder of the servo motor or external encoder (fully closed-loop control), the servo drive controls the mechanical position and speed quickly and accurately. This control mode is applicable to scenarios requiring positioning control, such as manipulator, SMT machine, engraving and milling machine (pulse sequence reference), and computer numerical control (CNC) machine tool.

In the speed control mode, the servo drive controls the mechanical speed based on speed references. Speed references are input through digital setting, analog voltage, or communication, and used by the servo drive to control the mechanical speed quickly and accurately. This control mode is applicable to scenarios where speed control is required or the host controller outputs speed references to control the servo drive during position control. An application example is analog engraving and milling machine.

The current is in linear relationship with the torque, and therefore torque control is operated by controlling the current. In the torque control mode, the servo drive controls the motor output torque based on torque references. Torque references are input through digital setting, analog voltage, or communication. This control mode is applicable to winding and unwinding devices with strict tension requirements. In these scenarios, the torque always changes with the winding radius so that the tension will not change along with the change of the winding radius.

5.1 Basic Setting

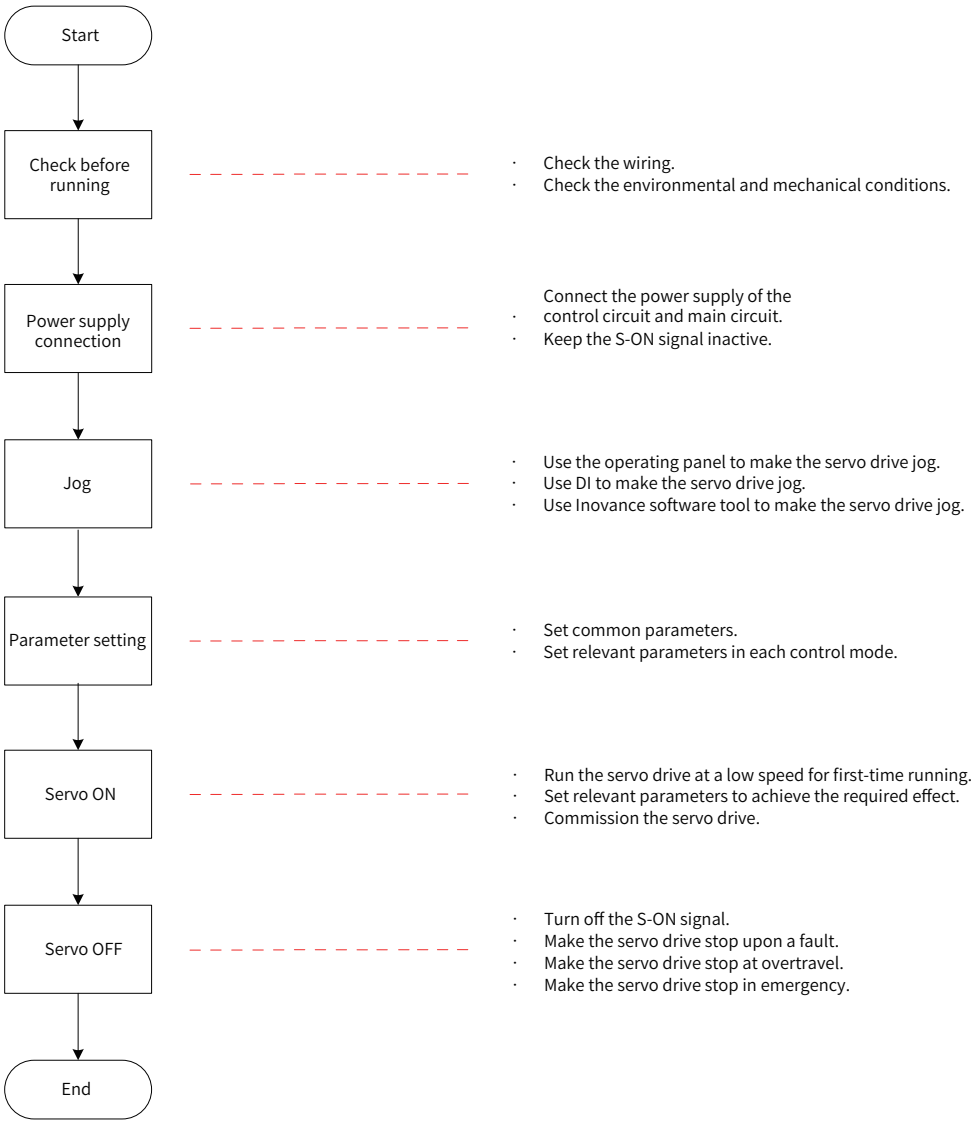

Figure 5-2 Servo drive setting flowchart

5.1.1 Checklist Before Running

Check the following items before running the servo drive and servo motor:

Table 5-1 Checklist before running

Re-cord	No.	Content
Wiring		
☐	1	The main circuit output terminals U, V, W of the servo drive and the main circuit cables U, V, W of the servo motor are of the same phases and are connected correctly.
☐	2	The PN copper busbar of the servo drive is not short-circuited.
☐	3	The control signal cables of the servo drive are connected correctly. External cables for brake and overtravel protection are connected properly.
☐	4	The servo drive and servo motor are grounded reliably.
☐	5	The stress of all cables is within the specified range.
☐	6	Wiring terminals are insulated.
Environmental and mechanical factors		
☐	1	There are no foreign objects such as wire ends and metal chips, which may cause short circuit of signal cables and power cables, inside and outside the servo drive.
☐	2	The servo drive and external braking resistor are not placed on combustible objects.
☐	3	The servo motor and its axes are installed and mechanically connected reliably.
☐	4	The servo motor and devices connected to the servo motor can run normally.

5.1.2 Power Supply Connection

1) Connect the power supply of the control circuit and main circuit.

Connect the power supply of the main circuit. The bus voltage displayed on the power supply unit operating panel gradually increases from 0 V to about 540 V, and then the drive unit operating panel lights up.

- After the power supplies of the control circuit and main circuit are turned on, the bus voltage indicator displays normally. The status displayed on the operating panel changes from "Reset" to "Nrd" and then to "Rdy" in turn. The servo drive is ready to run and waits the S-ON signal from the host controller.
- If the operating panel always displays "Nrd", rectify the fault according to instructions in *"Chapter 11 Troubleshooting"*.
- If the operating panel displays the specific fault code, rectify the fault according to instructions in *"Chapter 11 Troubleshooting"*.

2) Switch off the S-ON signal.

Allocate function 1 (FunIN.1: S-ON, servo ON) to one DI terminal (DI5 by default) of the servo drive and determine the activation logic of the DI terminal. Then deactivate this DI through communication with the host controller or external switch.

☆ Related function code:

Function No.	Name	Function Name	Function

FunIN.1	S-ON	Servo ON	Inactive: Servo motor disabled Active: Servo motor enabled upon power-on

5.1.3 Jogging

The jog function can be used in the trial run to check whether the motor rotates properly and no abnormal vibration or noise is generated during rotation. You can activate the jogging function through the operating panel, two pre-configured external DIs, or the Inovance software tool. The motor takes the value saved in H06-04 as the jog speed.

1) Jog through the operating panel

Switch to H0D-11 on the operating panel to enter the jogging mode, and the operating panel displays the default jogging speed in H06-04. Press the UP/DOWN key to set the jogging speed, and press the SET key to enter the jogging state. The operating panel displays "JOG". Then, press the UP/DOWN key to perform forward or reverse jogging. After you press the MODE key to exit the jogging mode, H06-04 returns to the default value, with previous setpoint abandoned. For the operation and display, see *"4.6 Basic Operation and Trial Run"*.

☆ Related parameters:

Para.	Name	Value Range	Unit	Function	Setting Condition	Effective Time	Default
H06-04	Jog speed reference value	0 to 6000	RPM	Sets the jog speed reference.	During operation	Immediately	100

2) Jog through DI

CAUTION

◆ Jogging through DI is permitted in any mode.

Assign two external DIs with FunIN.18 and FunIN.19 respectively. After setting the jog speed through H06-04, switch on the S-ON signal to perform jog through the DI status.

☆ Related function No.:

Function No.	Name	Function Name	Description
FunIN.18	JOGCMD+	Forward jog	Active: Input according to the command Inactive: RUN command input stopped
FunIN.19	JOGCMD–	Reverse jog	Active: Input in reverse to the command Inactive: RUN command input stopped

3) Jog through the software tool

Access the jog interface of the Inovance software tool first, and then set the jog speed through H06-04. After clicking the S-ON button, you can perform forward or reverse jog through the forward/reverse button. When you close the jog interface to exit from the jog mode, H06-04 returns to the default value, with previous setpoint abandoned.

5.1.4 Rotation Direction Selection

Set H02-02 (Rotation direction) to change the direction of rotation without modifying the input reference polarity.

☆ Related parameters:

Para.	Name	Value Range	Function	Setting Condition	Effective Time	Default
H02-02	Rotation direction selection	0: CCW direction as forward direction 1: CW direction as forward direction	Sets the motor forward direction viewed from the motor shaft.	At stop	Next power-on	0

The change of H02-02 does not affect the pulse output form or the sign (+/–) of monitored parameter values of the servo drive.

The direction of "forward drive" in overtravel prevention is the same as that defined by H02-02.

5.1.5 Output Pulse Phase Selection

The output pulse of the servo drive is phase A + phase B quadrature pulse.

The relationship between phase A and phase B pulses can be changed directly through H02-03 (Output pulse phase).

☆ Related parameters:

Para.	Name	Value Range	Function	Setting Condition	Effective Time	Default
H02-03	Output pulse phase	0: Phase A leads phase B 1: Phase A lags behind phase B	Sets the phase relationship of output pulses. 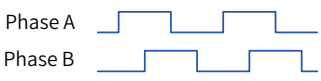 Phase A leads phase B by 90° . 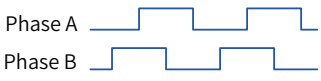 Phase A lags behind phase B by 90° .	At stop	Next power-on	0

5.1.6 Brake Setting

The brake is used to prevent the servo motor shaft from moving and lock the motor position when the servo drive is not running. This is to keep the mechanical motion parts from moving due to gravity or external force.

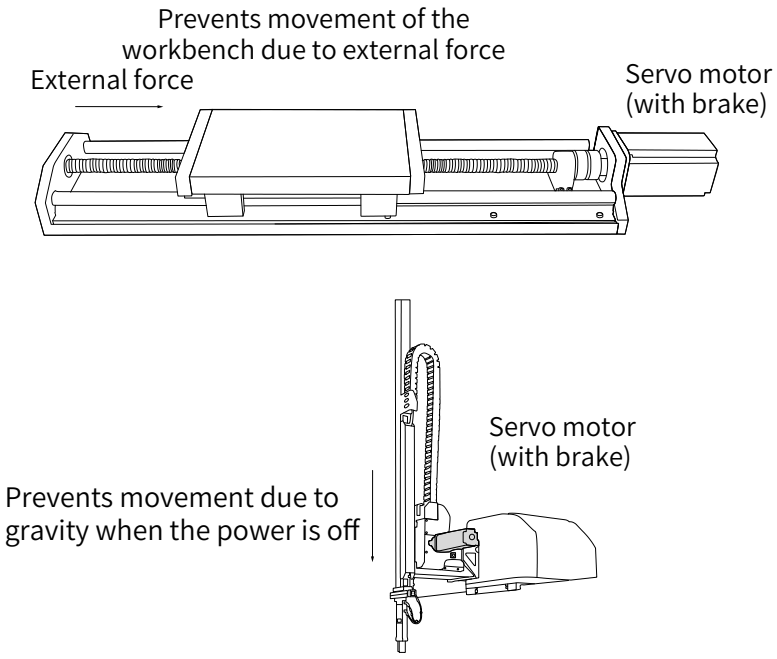

Figure 5-3 Application of the brake

CAUTION
◆ The built-in brake is a special non-energized mechanism designed for position-lock in the stop state. Do not use the built-in brake for any other purposes, such as braking. ◆ The brake coil has no polarity. ◆ After the servo motor stops, switch off the S-ON signal. ◆ When the motor with the built-in brake runs, the brake may generate a click sound, which does not affect its function. ◆ When brake coils are energized (the brake is released), flux leakage may occur on the shaft end. Pay special attention when using magnetic sensors near the motor.

1) Wiring of the brake

The connection of brake input signals is polarity insensitive. Users need to prepare a 24 V power supply. The following figure shows the standard wiring of the brake signals (BK) and the brake power supply.

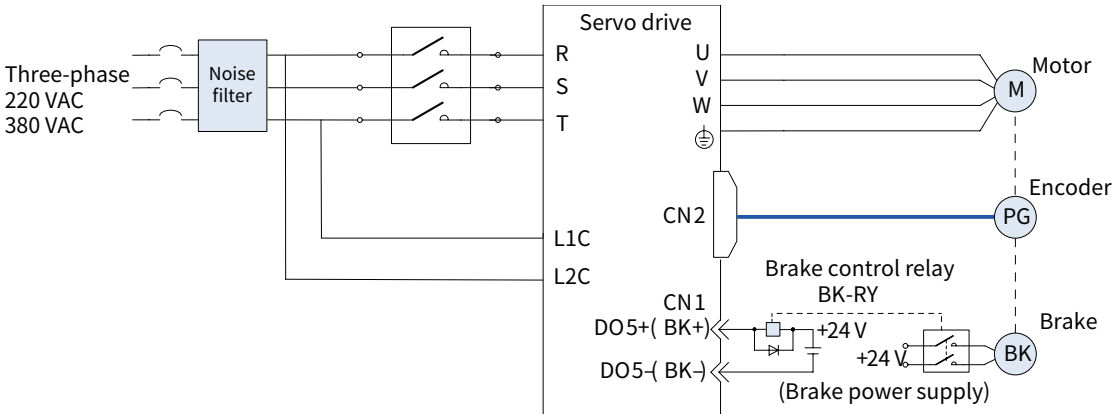

Figure 5-4 Wiring of the brake

Precautions during wiring:

■ When determining the length of the motor brake cable, take into full account the voltage drop caused by cable resistance. The input voltage must be at least 21.6 V to enable the brake to work properly. The following table lists the brake specifications of Inovance servo motors.

Table 5-2 Brake specifications

Motor Model	Holding Torque (N·m)	Supply Voltage (V) ±10%	Resistance (Ohm) ±7%	Supply Current Range (A)	Release Time (ms)	Close Time (ms)
MS1H1-05B/10B	0.3	24	96	0.23 to 0.27	10	30
MS1H1-20B/40B	1.5		82.3	0.25 to 0.34	20	50
MS1H1-75B	2.5		50.1	0.40 to 0.57	25	60
MS1H4-40B	1.5		82.3	0.25 to 0.34	20	50
MS1H4-75B	2.5		50.1	0.40 to 0.57	25	60

■ The brake shall not share power supply with other electrical devices. This is to prevent malfunction of the brake due to voltage or current drop caused by other working devices.

■ Use cables with a cross-sectional area above 0.5 mm^2.

2) Brake software setting

For the servo motor with brake, assign a DO terminal with function 9 (FunOUT.9: BK, brake output) and determine the activation logic of the DO terminal.

☆ Related function No.:

Function No.	Name	Function Name	Function
FunOUT.9	BK	Brake output	Invalid: The brake power supply is ON and the brake is applied. The motor is in position lock state. Valid: The brake power supply is OFF and the brake is released. The motor can rotate.

The operating time sequences of the brake are different between normal state and fault state of the servo drive.

3) Brake time sequence in the servo drive normal state

The brake time sequence in the normal state changes with the motor states: static and rotating.

Static: The motor speed is lower than 20 RPM.

Rotating: The motor speed is equal to or greater than 20 RPM.

4) Brake time sequence in the motor static state

If the servo enabling (S-ON) signal changes from ON to OFF, and the present motor speed is lower than 20 RPM, the servo drive acts according to the brake time sequence in the motor static state.

CAUTION	
	◆ After the brake output signal changes from OFF to ON, do not input a position/speed/torque reference within the time defined by H02-09 (Delay from brake output ON to command received). Otherwise, reference loss or running error may occur. ◆ When the motor is used to drive a vertical axis, the mechanical motion part may move slightly due to the gravity or external force. In motor static status, if the S-ON signal becomes OFF, the brake output signal becomes OFF immediately. However, within the time defined by H02-10 (Delay from brake output OFF to motor de-energized in static status), the motor is still energized to prevent the mechanical motion part from moving due to the gravity or external force.

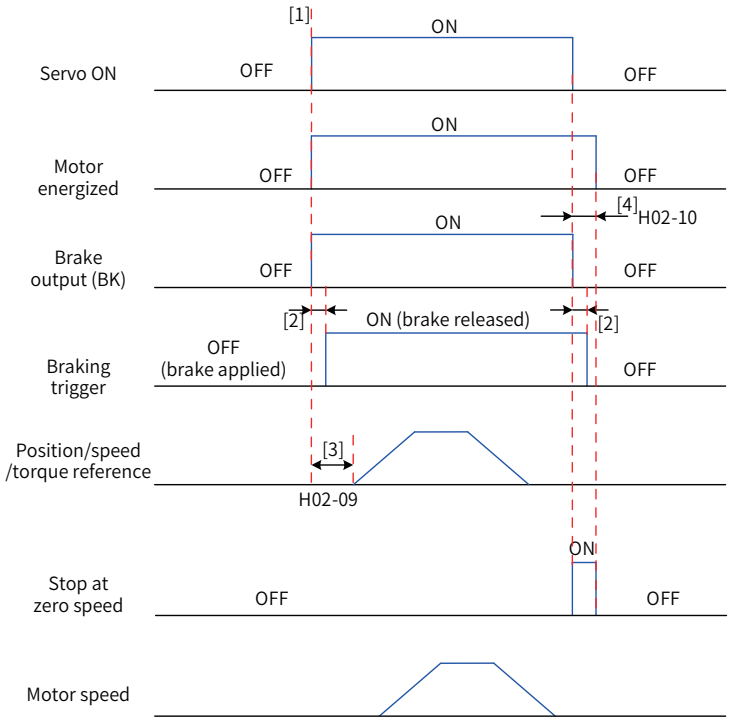

Figure 5-5 Brake time sequence in the motor static state

NOTE

◆ [1] When the S-ON signal is switched on, the brake output signal will also become ON, and the motor enters the energized state.

◆ [2] For delay of brake contactor actions, see *"Chapter 1 Product Information"*.

◆ [3] The time interval from the moment when brake output signal becomes ON to the moment when the command is input must be larger than the value defined by H02-09 (Delay from brake output ON to command received).

◆ [4] When the motor is in the static state (motor speed below 20 RPM), if the S-ON signal is switched off, the brake output signal will also become OFF. You can use H02-10 (Delay from brake output OFF to motor de-energized in static state) to set the delay from the moment the brake output signal becomes OFF to the moment the motor enters the de-energized state.

☆ Related parameters:

Para.	Name	Value Range	Unit	Function	Setting Condition	Effective Time	Default
H02-09	Delay from brake output ON to command received	0 to 500	ms	Sets the delay from the time when the brake output (BK) becomes ON to the time when the servo drive starts to receive input command. H02-09 is invalid if no terminal is assigned with the brake output (BK) function.	During operation	Immediately	250
H02-10	Delay from brake output OFF to motor de-energized in static state	1 to 1000	ms	Sets the delay from the time when the brake output (BK) becomes OFF to the time when the motor becomes de-energized in static state. H02-10 is invalid if no terminal is assigned with the brake output (BK) function.	During operation	Immediately	150

5) Brake time sequence in the motor rotating state

If the S-ON signal changes from ON to OFF, and the present motor speed is equal to or greater than 20 RPM, the servo drive acts according to the brake time sequence in the motor rotating state.

CAUTION

◆ If the S-ON signal changes from OFF to ON, do not input a position/speed/torque reference within the time defined by H02-09 (Delay from brake output ON to command received). Otherwise, reference loss or running error may occur.

◆ If the S-ON signal becomes OFF during motor rotating, the motor enters the "Stop at zero speed" state, but the brake output signal becomes OFF only after one of the following conditions is met:

◆ The time defined by H02-12 (Delay from S-ON OFF to brake output OFF in rotating state) is not reached, but the motor has decelerated to the value defined by H02-11 (Motor speed threshold at brake output OFF in rotating state).

◆ The time defined by H02-12 (Delay from S-ON OFF to brake output OFF in rotating state) is reached, but the motor speed is still higher than the value defined by H02-11 (Motor speed threshold at brake output OFF in rotating state).

◆ After the brake output signal changes from ON to OFF, the motor remains energized within 50 ms to prevent the mechanical motion part from moving due to the gravity or external force.

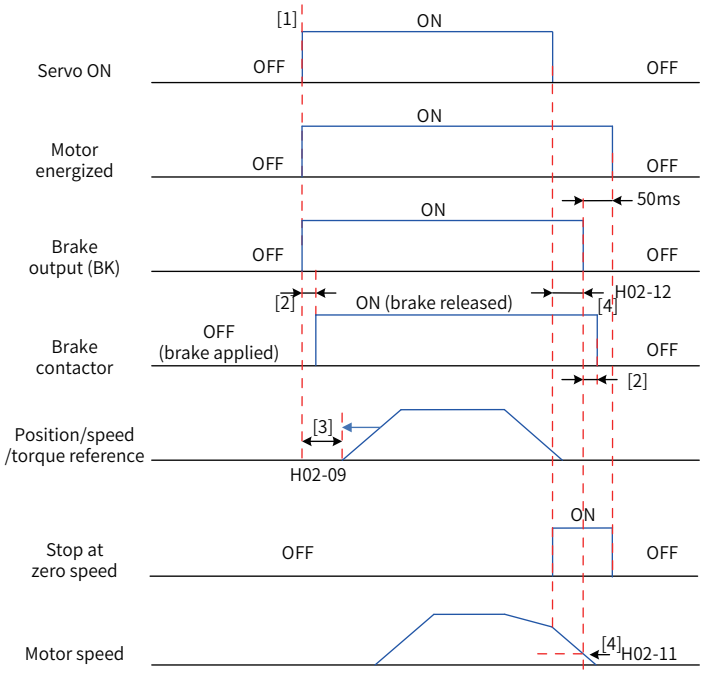

Figure 5-6 Brake time sequence in the motor rotating state

NOTE

◆ [1] When the S-ON signal is switched on, the brake output signal will also become ON, and the motor enters the energized state.

◆ [2] For delay of brake contactor actions, see *"Chapter 1 Product Information"*.

◆ [3] The time interval from the moment when brake output signal becomes ON to the moment when the command is input must be larger than the value defined by H02-09 (Delay from brake output ON to command received).

◆ [4] After the S-ON signal becomes OFF during motor rotation, set the delay from the moment when the S-ON signal becomes OFF to the moment when the brake output signal becomes OFF in H02-11 (Motor speed threshold at brake output OFF in rotating state) and H02-12 (Delay from S-ON OFF to brake output OFF in rotating state). The motor enters the de-energized state after a delay of 50 ms when the brake output signal becomes OFF.

☆ Related parameters:

Para.	Name	Value Range	Unit	Function	Setting Condition	Effective Time	Default
H02-11	Motor speed threshold at brake output OFF in rotating state	0 to 3000	RPM	Sets the motor speed threshold at brake output OFF when the motor is in rotating state. H02-11 is invalid if no terminal is assigned with the brake output (BK) function.	During operation	Immediately	30
H02-12	Delay from S-ON OFF to brake output OFF in rotating state	1 to 1000	ms	Sets the delay from S-ON OFF to brake output OFF when the motor is in rotating state. H02-12 is invalid if no terminal is assigned with the brake output (BK) function.	During operation	Immediately	500

6) Brake time sequence in servo drive fault state

Based on stop mode, servo faults are classified into class 1 (No.1) faults and class 2 (No.2) faults. For details, see Chapter 9. The brake time sequence in the fault state changes with the fault class.

For No.1 faults:

The brake DO output condition is the same as the "brake time sequence in the motor rotating state when the servo drive is in normal state". That is,

the brake output signal becomes OFF only when one of the following conditions is met:

- The time defined by H02-12 (Delay from S-ON OFF to brake output OFF in rotating state) is not reached, but the motor has decelerated to the value defined by H02-11 (Motor speed threshold at brake output OFF in rotating state).
- The time defined by H02-12 (Delay from S-ON OFF to brake output OFF in rotating state) is reached, but the motor speed is still higher than the value defined by H02-11 (Motor speed threshold at brake output OFF in rotating state).

For No.2 faults:

When a No.2 fault occurs and the brake is enabled, the stop mode is forced to "Stop at zero speed, keeping de-energized state".

In this case, the servo motor stops at zero speed first. When the actual motor speed is lower than 20 RPM, the brake output signal immediately becomes OFF, but the motor is still in the energized state within the time defined by H02-10 (Delay from brake output OFF to motor de-energized in static state).

5.1.7 Servo ON

1) Switch on the S-ON signal

When the servo drive is ready to run, the operating panel displays "Run". If there is no reference input at this moment, the servo motor does not rotate and stays locked.

2) After a command is input, the servo motor starts rotating.

Table 5-3 Operation of the servo drive

Record	No.	Content
□	1	During initial operation, set a proper command to make the motor run at low speed and check whether the motor rotates properly.
□	2	Check whether the motor rotates in the correct direction. If the direction of rotation is opposite to the expected direction, check the reference signal and reference direction signal.

☐	3	If the motor rotates in the correct direction, you can view the actual speed in H0B-00 and the average load rate in H0B-12 through the operating panel or the Inovance software tool.
☐	4	After checking preceding conditions, adjust related parameters to make the motor operate as desired.
☐	5	Commission the servo drive according to *"Chapter 6 Adjustment"*.

3) Power-on sequence diagram

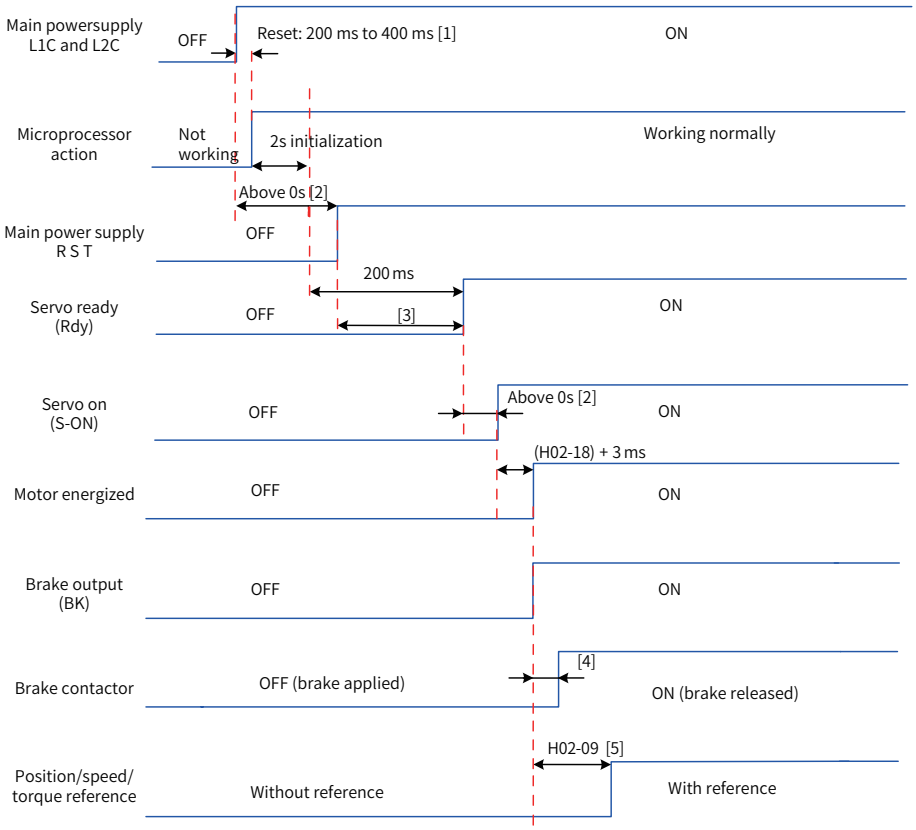

Figure 5-7 Power-on sequence diagram

[1] The reset time is determined by the setup time of the +5 V power supply of the microprocessor.

[2] > 0s means that the time is determined by the main power connection moment.

[3] when the control power supply and main power supply are connected at the same time, the time is the same as the time from microprocessor initialization completed to Rdy signal active.

[4] For delay of brake contactor actions, see *"Chapter 1 Product Information"*.

[5] H02-09 is invalid if no DO terminal is assigned with the FunOUT.9 function.

4) Sequence diagram for stop at warning or fault

1) No.1 fault: Coast to stop, keeping de-energized state

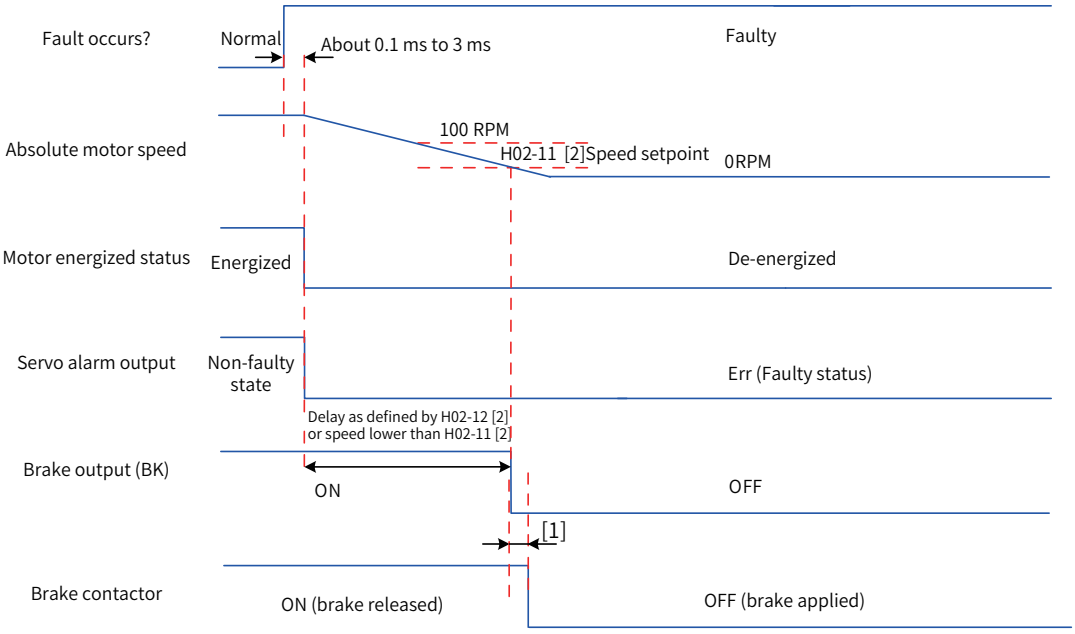

Figure 5-8 Sequence of "Coast to stop, keeping de-energized state" at No.1 fault

NOTE

- [1] For delay of brake contactor actions, see *"Chapter 1 Product Information"*.
- [2] H02-11 and H02-12 are invalid if no DO terminal is assigned with the FunOUT.9 function.

2) No.2 fault (without brake): Coast to stop, keeping de-energized state

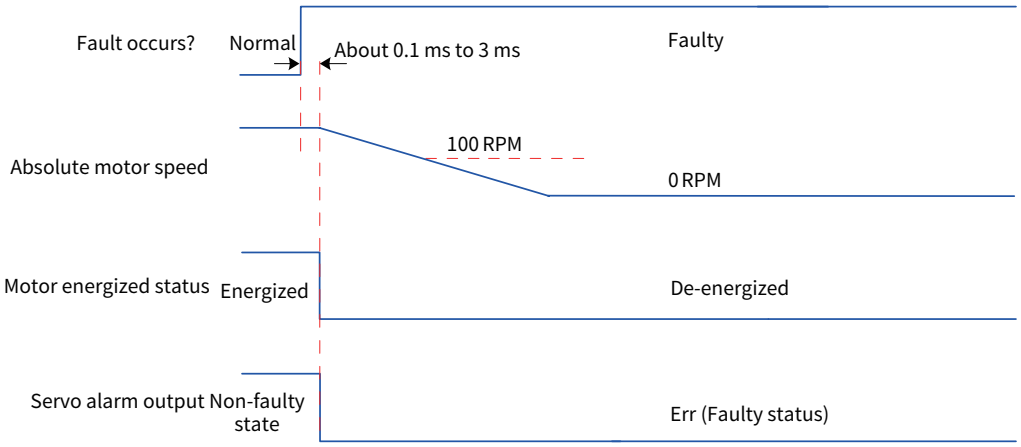

Figure 5-9 Sequence of "Coast to stop, keeping de-energized state" at No.2 fault

3) No.2 fault (without brake): Stop at zero speed, keeping de-energized state

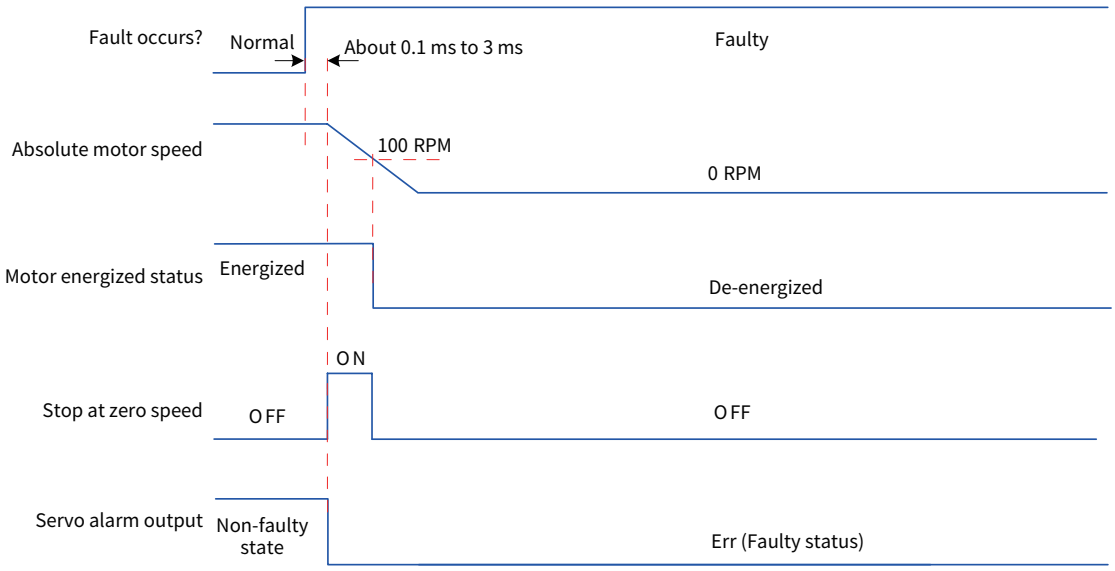

Figure 5-10 Sequence of "Stop at zero speed, keeping de-energized state" at No.2 fault (without brake)

4) No.2 fault (with brake): Stop at zero speed, keeping de-energized state

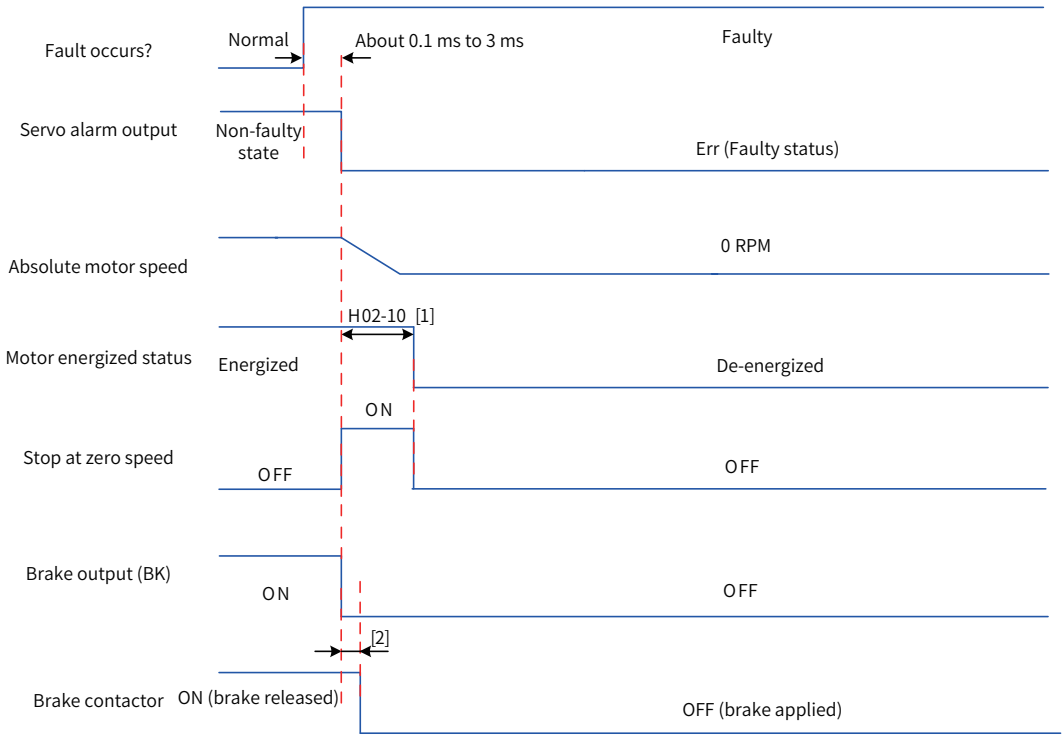

Figure 5-11 Sequence of "Stop at zero speed, keeping de-energized state" at No.2 fault (with brake)

NOTE

- [1] H02-10 is invalid if no DO terminal is assigned with the FunOUT.9 function.
- [2] For delay of brake contactor actions, see *"Chapter 1 Product Information"*.

When a No.3 warning occurs on the servo drive, such as Er.900 (DI emergency braking), Er.950 (Positive limit switch warning), and Er.952 (Negative limit switch warning), the servo drive stops according to the following time sequence as shown in Figure 5-12.

5) Warnings that cause stop: Stop at zero speed, keeping position lock state

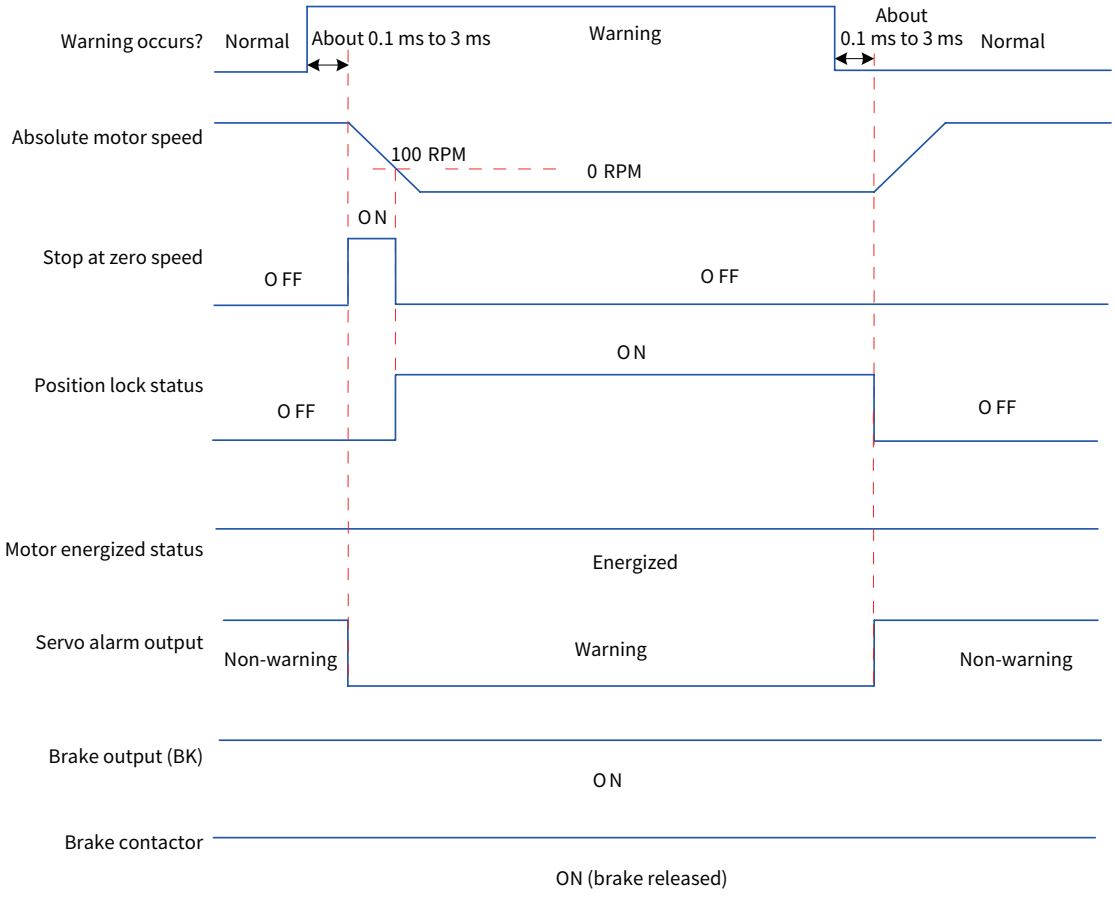

Figure 5-12 Sequence for warnings that cause stop

The other warnings do not affect the operation state of the servo drive. The sequence diagram for these warnings is shown in Figure 5-13.

6) Warnings that do not cause stop

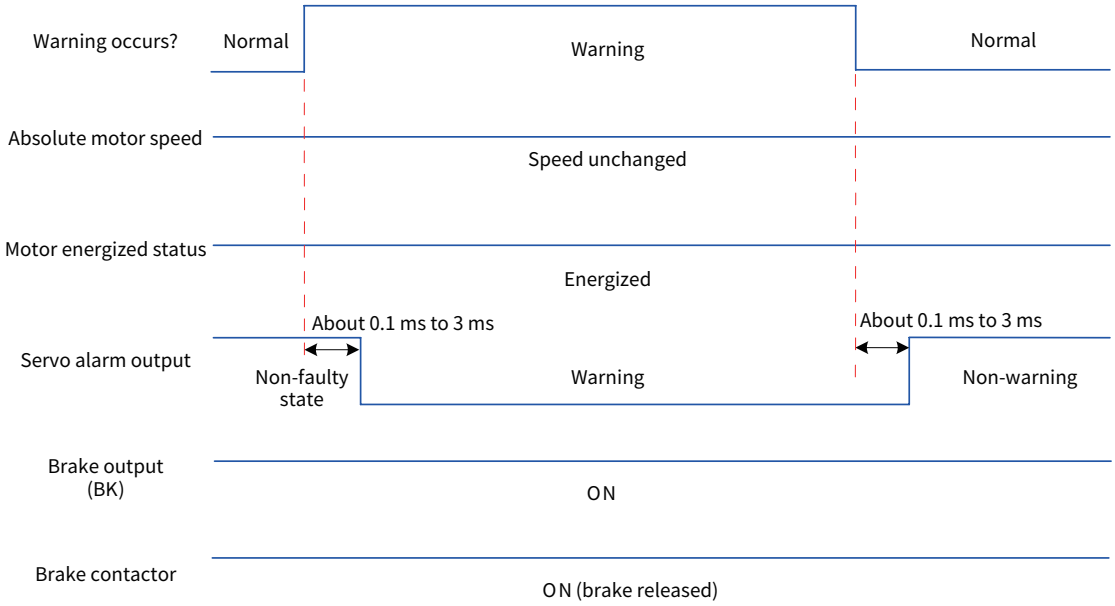

Figure 5-13 Sequence for warnings that do not cause stop

7) Fault reset

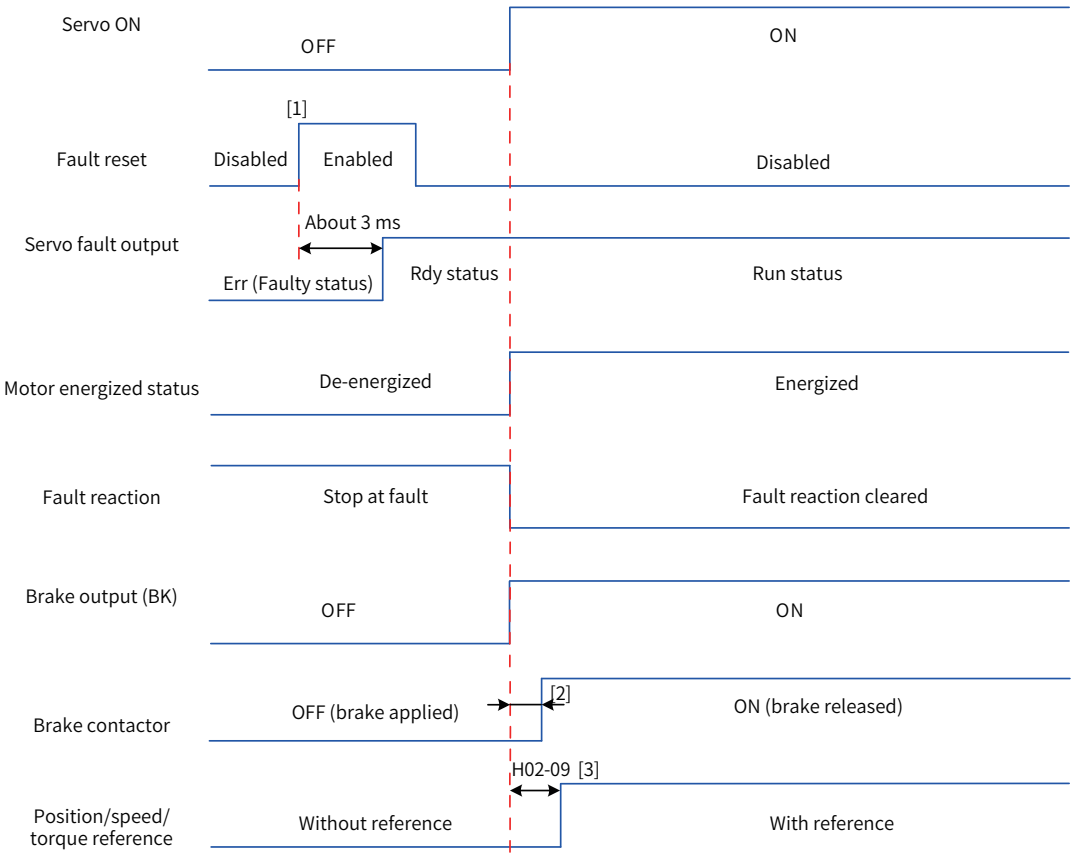

Figure 5-14 Sequence for fault reset

NOTE

- [1] The DI signal used for fault reset (FunIN.2: ALM-RST) is edge triggered.
- [2] For delay of brake contactor actions, see Chapter 1.
- [3] H02-09 is invalid if no DO terminal is assigned with the FunOUT.9 function.

5.1.8 Servo OFF

Servo stop includes coast to stop and stop at zero speed based on the stop mode, and de-energized state and position lock state based on the stop state. See the following table for details.

Table 5-4 Comparison of the stop modes

Stop Mode	Coast to stop	Stop at zero speed
Description	The servo motor is de-energized and coasts to 0 RPM. The deceleration time is affected by the mechanical inertia and mechanical friction.	The servo drive outputs a reverse braking torque to stop the motor.
Feature	This mode features smooth and slow deceleration with small mechanical shock.	This mode features quick deceleration with obvious mechanical shock.

Table 5-5 Comparison of the stop statuses

De-energized	Position Lock
The motor is de-energized and the motor shaft can be rotated freely after the motor stops rotating.	The motor shaft is locked and cannot be rotated freely after the motor stops rotating.

The servo stops due to the following causes:

1) Stop at S-ON OFF

Assign a DI terminal with the S-ON function and disable this terminal.

☆ Related parameters:

Para.	Name	Value Range	Function	Setting Condition	Effective Time	Default
H02-05	Stop mode at S-ON OFF	0: Coast to stop, keeping de-energized state 1: Stop at zero speed, keeping de-energized state	Sets the stop mode of the servo motor when the S-ON signal becomes OFF.	At stop	Immediately	0

2) Stop at fault

The stop mode varies with the fault type. For fault classification, see Chapter 9.

☆ Related parameters:

Para.	Name	Value Range	Function	Setting Condition	Effective Time	Default
H02-06	Stop mode at No.2 fault	0: Coast to stop, keeping de-energized state 1: Stop at zero speed, keeping de-energized state	Sets the motor stop mode when a No.2 fault occurs. ◆ Note: When brake is applied, the servo drive executes the value "1" forcibly.	At stop	Immediately	0
H02-08	Stop mode at No.1 fault	0: Coast to stop, keeping de-energized state	Sets the motor stop mode when a No.1 fault occurs.	At stop	Immediately	0

3) Stop at overtravel

★ Terms:

Overtravel: The mechanical motion exceeds the designed range of safe movement.

Stop at overtravel: When a motion part moves beyond the range of safe movement, the limit switch outputs a level change to force the motor to stop.

☆ Related parameters:

Para.	Name	Value Range	Function	Setting Condition	Effective Time	Default
H02-07	Stop mode at overtravel	0: Coast to stop, keeping de-energized state 1: Stop at zero speed, keeping position lock state 2: Stop at zero speed, keeping de-energized state	Sets the motor stop mode when overtravel occurs.	At stop	Immediately	1

When overtravel occurs on a motor used to drive a vertical axis, the workpiece may fall. To prevent the risk of falling, set H02-07 (Stop mode at overtravel) to 1. When the workpiece moves linearly, install limit switches to prevent potential mechanical damage. When overtravel occurs, input a reverse RUN command to make the motor (workpiece) run in the opposite direction.

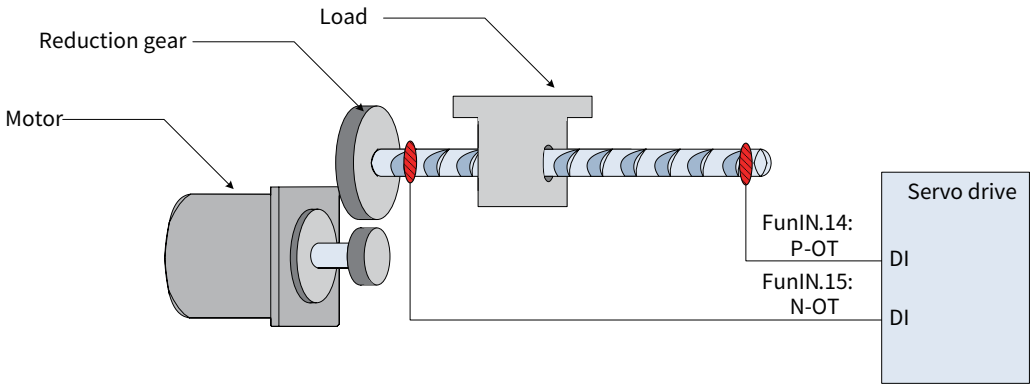

Figure 5-15 Installation of limit switches

To use the limit switches, assign FunIN.14 (P-OT, positive limit switch) and FunIN.15 (N-OT, negative limit switch) to two DIs of the servo drive and determine the activation logic of these DI terminals. This is to enable the servo drive to receive the level signals input from the limit switches. The servo drive enables or cancels the stop-at-overtravel status based on the DI level status.

☆ Related function code:

Function No.	Name	Function Name	Function
FunIN.14	P-OT	Positive limit switch	When the mechanical movement is beyond the movable range, the overtravel prevention function will be activated. Inactive: Forward drive enabled Active: Forward drive disabled
FunIN.15	N-OT	Negative limit switch	When the mechanical movement is beyond the movable range, the overtravel prevention function will be activated. Inactive: Reverse drive enabled Active: Reverse drive disabled

4) Emergency stop

There are two ways to enable emergency stop, as shown below:

■ Using DI function 34: FunIN.34 (EmergencyStop)

■ Using the auxiliary function: emergency stop (H0D-05)

☆ Related function code:

Function No.	Name	Function Name	Function
FunIN.34	EmergencyStop	Braking	Inactive: Current operating state unaffected Active: Stop quickly as defined by H02-18, keeping position lock state, with Er.900 (DI emergency braking) reported

☆ Related parameters:

Para.	Name	Value Range	Function	Setting Condition	Effective Time	Default

H0D-05	Emergency stop	0: Current operating state unaffected 1: Enabled, stop mode determined by H02-05	Enables or disables the emergency stop function. The stop mode is the same as that at S-ON OFF.	At stop	Immediately	0

5.2 Position Control Mode

★ Terms:

The reference unit means the distinguishable minimum value input from the host controller to the servo drive.

The encoder unit means the value obtained after the input reference is processed by electronic gear ratio.

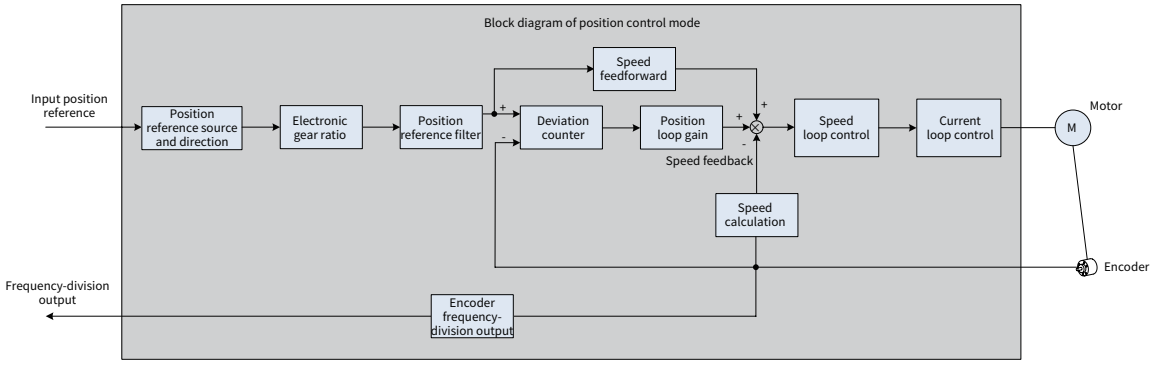

Figure 5-16 Block diagram of the position control mode

Set H02-00 to 1 on the operating panel or Inovance software tool to enable the position control mode.

Set the servo drive parameters based on the mechanical structure and specifications. The following section uses the basic parameter setting to describe the position control mode.

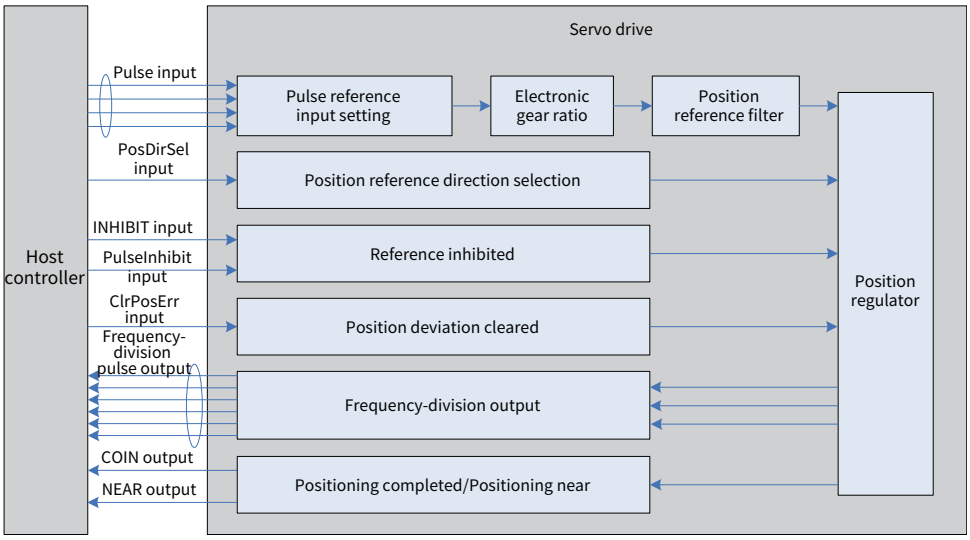

Figure 5-17 Signal exchange between the servo drive and the host controller

5.2.1 Position Reference Input Setting

The position reference input setting includes position reference source, direction, and inhibition.

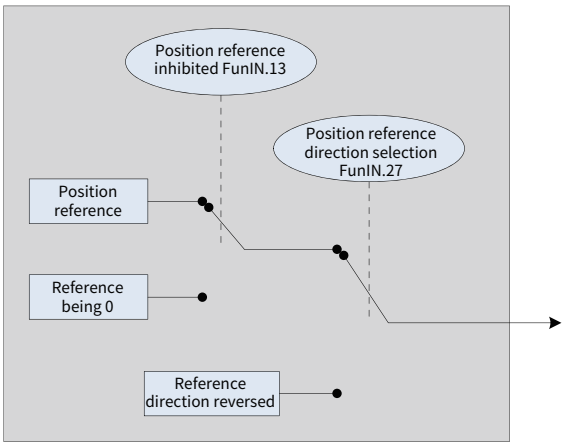

Figure 5-18 Block diagram of position reference input setting

1 Position reference source

Set the position reference source in H05-00.

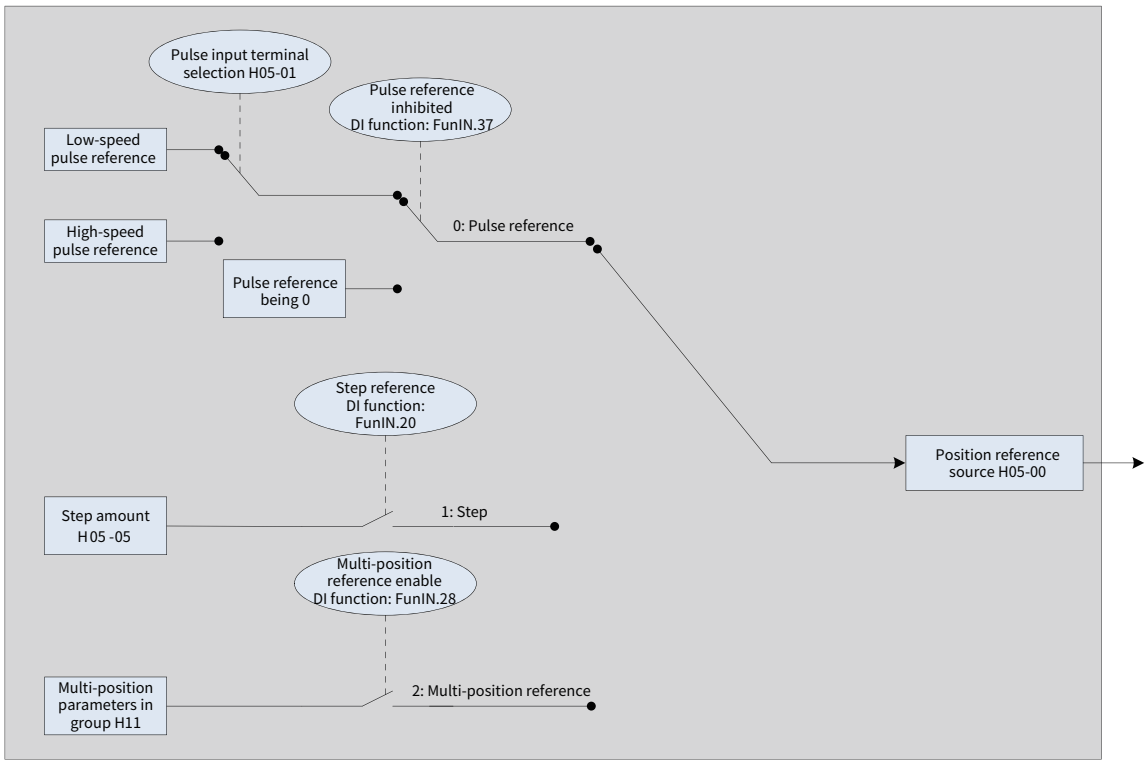

Figure 5-19 Setting of the position reference source

☆ Related parameters:

Para.	Name	Value Range	Function	Setting Condition	Effective Time	Default
H05-00	Position reference source	0: Pulse reference 1: Step reference 2: Multi-position reference	Sets the position reference source. Pulse reference is external position reference, and step reference and multi-position reference are internal position references.	At stop	Immediately	0

1) Pulse reference as the source (H05-00 set to 0)

Perform the following operations to obtain the correct pulse reference form.

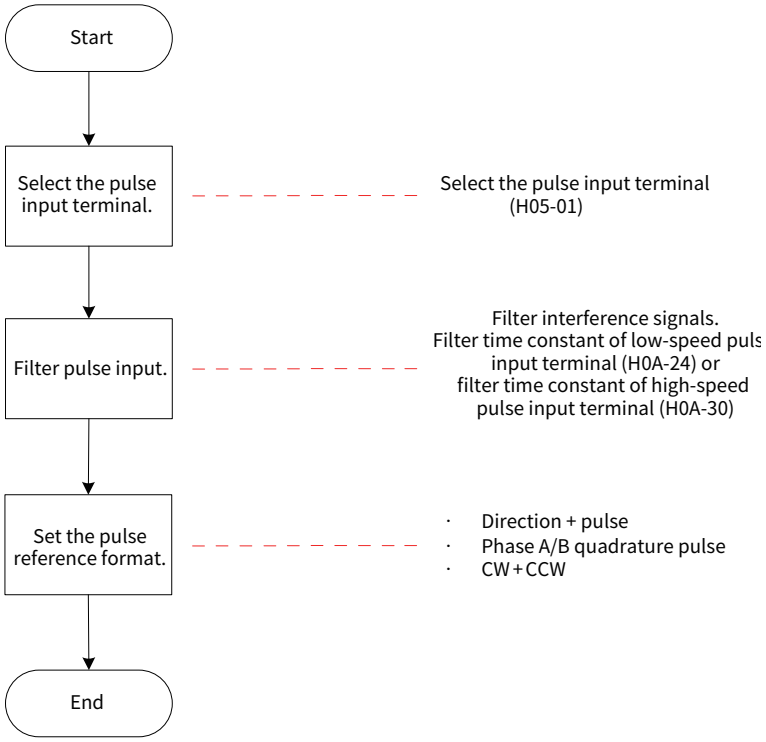

Figure 5-20 Flowchart of setting pulse reference as the source

① Pulse reference input terminal

The servo drive provides two sets of pulse input terminals:

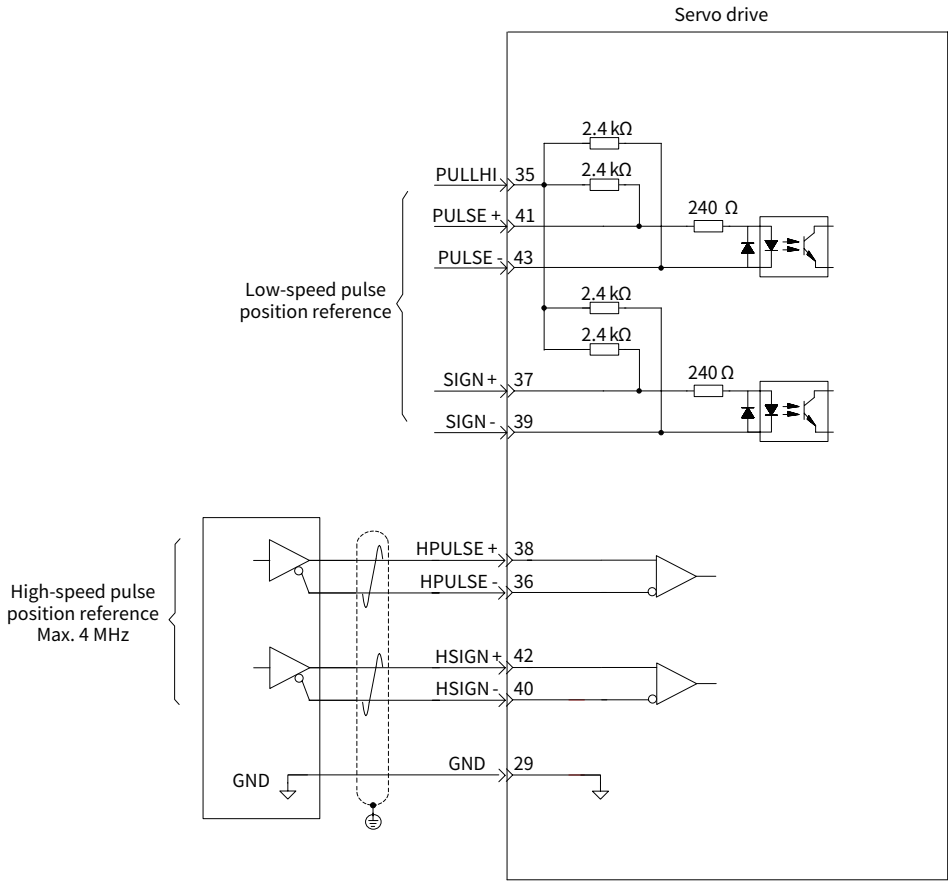

■ The low-speed input terminals (PULSE+, PULSE–, SIGN+, and SIGN–) receive differential input

(maximum frequency: 500 kpps) and open collector input (maximum frequency: 200 kpps).

■ The high-speed input terminals (HPULSE+, HPULSE–, HSIGN+, and HSIGN–) receive differential input (maximum frequency: 4 Mpps) only.

☆ Related parameters:

Para.	Name	Value Range	Function	Setting Condition	Effective Time	Default
H05-01	Pulse reference input terminal selection	0: Low-speed terminals 1: High-speed terminals	Sets the hardware pulse input terminals.	At stop	Immediately	0

Table 5-5 Pulse input specifications

Pulse Type		Max. Input Frequency	Voltage	Forward Current
High-speed pulse	Differential signal	4 M	5 V	< 25 mA
Low-speed pulse	Differential signal	500 k	5 V	< 15 mA
	Open collector signal	200 k	24 V	< 15 mA

② Pulse input terminal filter

Set a filter time to filter pulses input by the low- or high-speed pulse input terminals to prevent motor malfunction due to interference on the servo drive.

☆ Related parameters:

Para.	Name	Value Range	Unit	Function	Setting Condition	Effective Time	Default
H0A-24	Filter time constant of low-speed pulse input pin	0 to 255	25 ns	Sets the filter time constant of low-speed pulse input pin.	At stop	Next power-on	30
H0A-30	Filter time constant of high-speed pulse input pin	0 to 255	25 ns	Sets the filter time constant of high-speed pulse input pin.	At stop	Next power-on	3

If the filter time constant is t_F and the minimum width of input signals is t_{min}, the input signal and filtered signal are as shown in the following figure. The filtered signal has a t_F delay over the input signal.

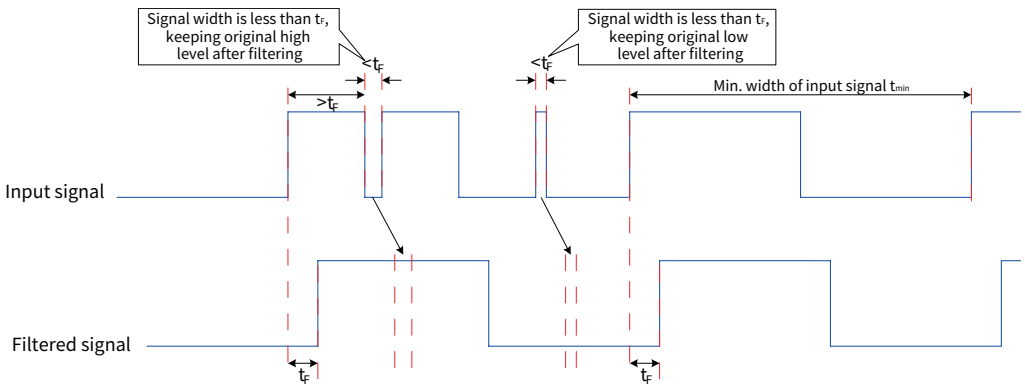

Figure 5-21 Example of signal filtering waveform

The filter time constant t_F must be equal to or smaller than (20% to 25%) t_{min}.

The recommended filter parameter setting based on the maximum frequency (or minimum width) of input pulses is describes in the following table.

Table 5-6 Recommended filter parameter setting

Pulse Input Terminal	Function Code	Max. Frequency	Recommended Filter Time Constant (Unit: 25 ns)
Low-speed pulse input terminal	H0A-24	< 167 k	30
Low-speed pulse input terminal	H0A-24	167 k to 250 k	20
Low-speed pulse input terminal	H0A-24	250 k to 500 k	10
High-speed pulse input terminal	H0A-30	500 k to 1 M	5
High-speed pulse input terminal	H0A-30	> 1 M	3

For example, if the filter time constant is set to 30, the actual filter time is 30 x 25 = 750 ns.

③ Pulse reference form

The servo drive supports three pulse input forms:

- Direction + pulse (positive or negative logic)
- Phase A + phase B quadrature pulse, 4-frequency multiplication
- CW + CCW

Select the pulse input form appropriate for the host controller or other pulse output devices.

☆ Related parameters:

Para.	Name	Value Range	Function	Setting Condition	Effective Time	Default
H05-15	Pulse reference form	0: Direction + pulse (positive logic) 1: Direction + pulse (negative logic) 2: Phase A + phase B quadrature pulse, 4-frequency multiplication 3: CW + CCW	Selects the pulse reference form.	At stop	Next power-on	0

Table 5-7 Pulse forms

H02-02 Rotation Direction Selection	H05-15 Reference Form Settings	Pulse Form	Signal	Pulse Diagram of Forward RUN	Pulse Diagram of Reverse RUN
0	0	Pulse + direction Positive logic	PULSE SIGN	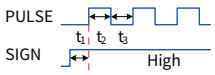	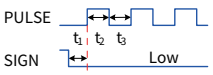
	1	Pulse + direction Negative logic	PULSE SIGN	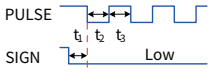	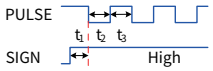
	2	Phase A + phase B quadrature pulse 4-frequency multiplication	PULSE (phase A) SIGN (phase B)	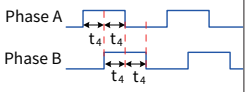 Phase A leads phase B by 90° .	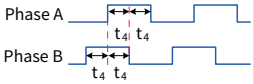 Phase B leads phase A by 90° .
	3	CW + CCW	PULSE (CW) SIGN (CCW)	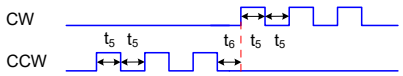	
				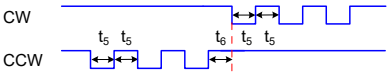	
1	0	Pulse + direction Positive logic	PULSE SIGN	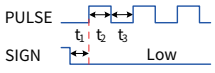	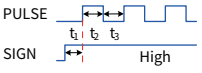
	1	Pulse + direction Negative logic	PULSE SIGN	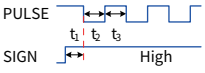	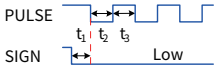
	2	Phase A + phase B quadrature pulse 4-frequency multiplication	PULSE (phase A) SIGN (phase B)	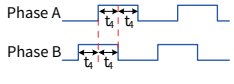 Phase B leads phase A by 90° .	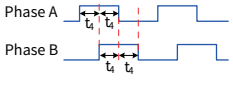 Phase A leads phase B by 90° .
	3	CW + CCW	PULSE (CW) SIGN (CCW)	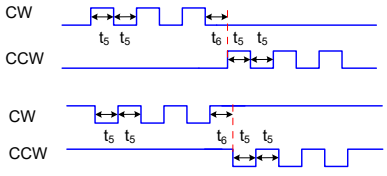	

The following table describes the maximum frequencies and minimum widths of position pulse references input from different terminals.

Table 5-8 Pulse reference specifications

Input Terminal		Max. Frequency	Min. Time Width (μs)					
			t_1	t_2	t_3	t_4	t_5	t_6
High-speed pulse input terminal		4 Mpps	0.125	0.125	0.125	0.25	0.125	0.125
Low-speed pulse input terminal	Differential input	500 kpps	1	1	1	2	1	1
	Open collector input	200 kpps	2.5	2.5	2.5	5	2.5	2.5

The rising time and fall time of position pulse references must be smaller than 0.1 μs.

④ Pulse reference frequency

Set the maximum position pulse reference in H0A-09. If the actual input pulse frequency is greater than the value of H0A-09, Er.B01 (Position reference input abnormal) will occur.

☆ Related parameters:

Para.	Name	Value Range	Unit	Function	Setting Condition	Effective Time	Default
H0A-09	Maximum position pulse frequency	100 to 4000	kHz	Sets the maximum frequency of external pulse references.	At stop	Next power-on	4000

2) Step setting as the source (H05-00 set to 1)

CAUTION

◆ When the servo drive is running (S-ON signal active), the motor is in the locked state if the step reference function is invalid, and rotates if this function is valid. After the H05-05 reference is executed, the function becomes invalid and the motor enters the locked state.

Step setting running means that the servo drive runs according to the internal fixed speed until the displacement reference is completed. The setting flowchart is shown in the following figure.

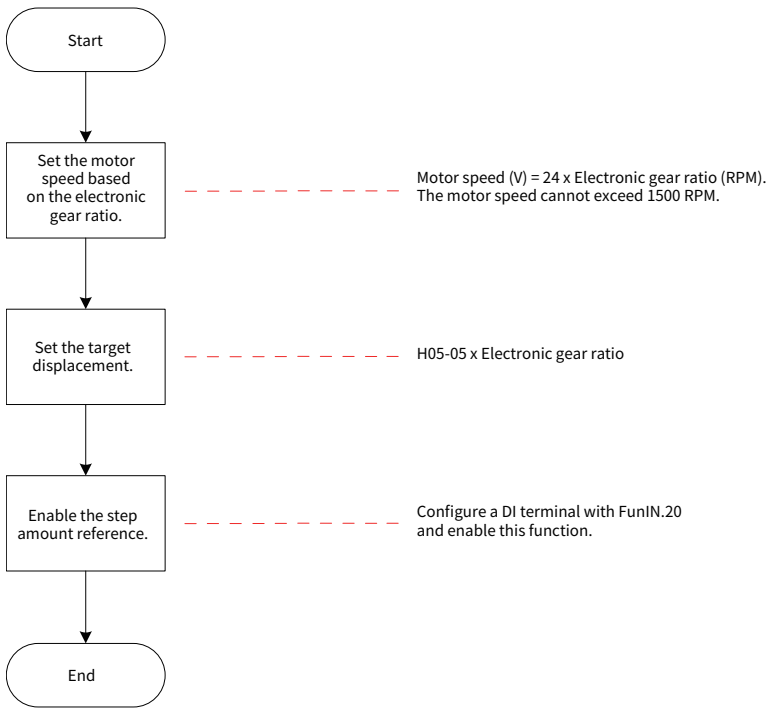

Figure 5-22 Flowchart of setting step reference as the source

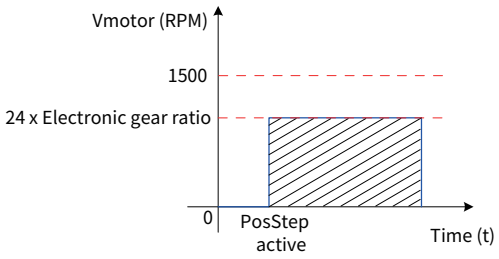

Figure 5-23 Motor running curve when H05-00 set to 1

In the preceding figure, motor displacement (shaded area) = H05-05 x Electronic gear ratio (encoder unit)

① Relationship between motor speed and electronic gear ratio:

When the position reference source is step setting, the motor speed is set based on the electronic gear ratio. The motor speed in this case must not exceed 1500 RPM.

Vmotor = 24 x Electronic gear ratio (RPM)

② Motor displacement:

When the position reference source is step setting, the position reference sum (reference unit) is set in H05-05. The positive or negative of the H05-05 value determines the positive or negative of the motor speed.

☆ Related parameters:

Para.	Name	Value Range	Unit	Function	Setting Condition	Effective Time	Default
H05-05	Step	–9999 to +9999	Reference unit	Sets the position reference sum when H05-00 is set to 1. Positive or negative of the value determines positive or negative of the motor speed.	At stop	Immediately	50

③ Step reference enable

When using step setting as the position reference source, assign a DI with FunIN.20 (PosStep, step reference) and determine the activation logic of the DI terminal.

☆ Related function code:

Function No.	Name	Function Name	Function
FunIN.20	PosStep	Step reference enable	In the servo running state: Valid: Execute step reference set in H05-05 and the servo motor runs. Invalid: The servo motor is in the locked state.

FunIN.20 is edge triggered. After executing the step position reference, the servo motor enters the locked state. After FunIN.20 becomes valid again, the servo motor executes the position reference set in H05-05.

3) Multi-position reference as the source (H05-00 set to 2)

The servo motor supports multi-position running. It stores 16 position references. The displacement, maximum running speed, and acceleration/deceleration time of each position can be set separately. The waiting time and switch mode between positions can also be set as needed. The setting flowchart is shown in the following figure.

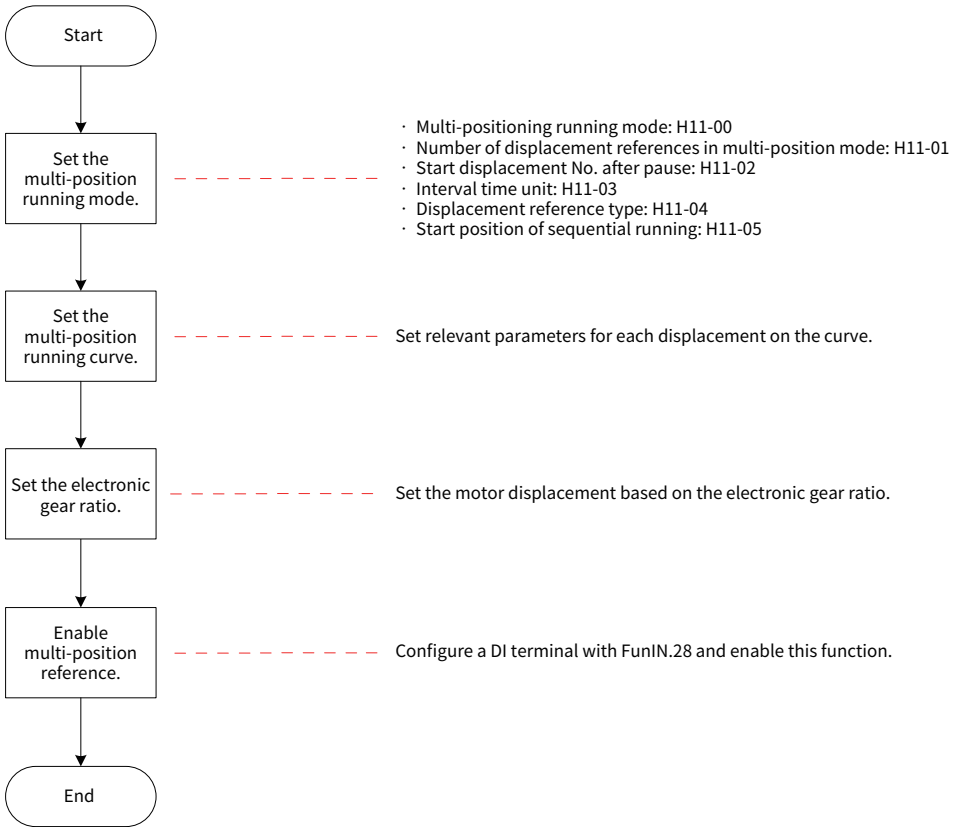

Figure 5-24 Flowchart of setting multi-position reference as the source

① Setting the multi-position running mode

☆ Related parameters:

Para.	Name	Value Range	Function	Setting Condition	Effective Time	Default
H11-00	Multi-position running mode	0: Stop after running for one cycle 1: Cyclic operation 2: DI switchover 3: Sequential operation	Sets the switchover mode between positions.	At stop	Immediately	1
H11-01	Number of position references	1 to 16	Sets the total number of positions in displacement reference.	At stop	Immediately	1
H11-02	Start position upon restart after pause	0: Continue to execute the rest of the positions 1: Start from the 1st position	Sets the start position No. when the multi-position running recovers after a pause. ◆ Note: This parameter is valid only when H11-00 is not set to 2.	At stop	Immediately	1

Para.	Name	Value Range	Function	Setting Condition	Effective Time	Default
H11-03	Waiting time unit	0: ms 1: s	Sets the unit of the acceleration/deceleration time and waiting time. ◆ Note: This parameter is valid only when H11-00 is set to 0 or 1.	At stop	Immediately	0
H11-04	Displacement reference type	0: Relative position reference 1: Absolute position reference	Sets the displacement reference type.	At stop	Immediately	0
H11-05	Start position of sequential running	0 to 16	Sets the start position No. after first cycle of running when H11-00 is set to 3. ◆ Note: H11-05 set to 0 or H11-05 > H11-01: not cyclic H11-05 > 1: The start position No. is the value of H11-05.	At stop	Immediately	0

■ Stop after running for one cycle (H11-00 set to 0)

Table 6-11 Description of running for one cycle

Mode Description	Running Curve
◆ The servo drive stops after running for one cycle. ◆ The drive automatically switches to the next position. ◆ You can set the waiting time between positions. ◆ The PosInSen (Multi-position reference enable) signal is level-triggered.	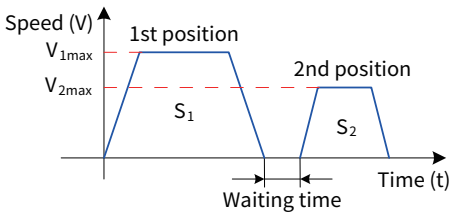 V_{1max} and V_{2max}: maximum operating speeds in position 1 and position 2. S_1 and S_2: 1st displacement and 2nd displacement ◆ The position completed signal is active after each position is completed. ◆ If the multi-position reference enable signal is turned off during running, the servo drive discards the uncompleted displacement and stops. After the servo drive stops, the positioning completed signal is active. ◆ After the multi-position reference enable signal is switched on again, the servo drive starts running from the corresponding position according the setting of H11-02. ◆ If the S-ON signal is switched off during running of a certain position, the motor stops according to the stop mode set in H02-05. After the motor stops, the positioning completed signal is inactive. ◆ The DI logic change of position reference direction switchover (FunIN.27: PosDirSel) during running of a certain position does not affect the direction of the current position running.

★ Terms:

One-cycle running means that the servo drive completes running the total number of positions set in H11-

01.

■ Cyclic operation (H11-00 set to 1)

Table 5-9 Description of cyclic operation

Mode Description	Running Curve
◆ The drive starts from position 1 after each cycle of operation. ◆ The drive automatically switches to the next position. ◆ You can set the waiting time between positions. ◆ The cyclic operation state remains active as long as the FunIN.28 (Multi-position reference enable) signal is active. ◆ The PosInSen (Multi-position reference enable) signal is level-triggered.	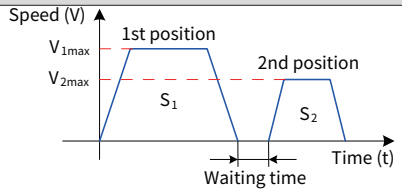 V_{1max} and V_{2max}: maximum operating speeds in position 1 and position 2. S_1 and S_2: 1st displacement and 2nd displacement ◆ The position completed signal is active after each position is completed. ◆ If the multi-position reference enable signal is turned off during running, the servo drive discards the uncompleted displacement and stops. After the servo drive stops, the positioning completed signal is active. ◆ After the multi-position reference enable signal is switched on again, the servo drive starts running from the corresponding position according the setting of H11-02. ◆ If the S-ON signal is switched off during running of a certain position, the motor stops according to the stop mode set in H02-05. After the motor stops, the positioning completed signal is inactive. ◆ The DI logic change of position reference direction switchover (FunIN.27: PosDirSel) during running of a certain position does not affect the direction of the current position running.

■ DI switchover (H11-00 set to 2)

Table 5-10 Description of DI switchover

Mode Description	Running Curve
◆ When the servo drive runs the current position, you can set the next position No. After the position reference of the current number is completed, the servo motor stops. After the multi-position reference enable signal is switched on again, the current position No. is run. ◆ The position No. is determined by the DI logic. ◆ The internal time between positions is determined by the command delay of the host controller. ◆ The PosInSen (Multi-position reference enable) signal is edge-triggered.	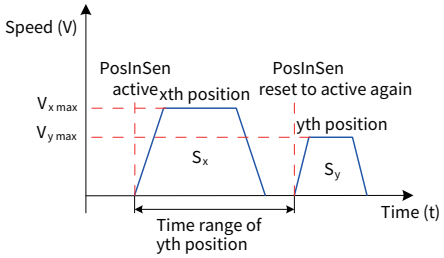 V_{xmax} and V_{ymax}: maximum operating speeds in position x and position y S_x and S_y: displacement x and displacement y ◆ The position completed signal is active after each position is completed. ◆ If the multi-position reference enable signal is turned off during running, the servo drive completes the remaining displacement and outputs the positioning completed signal. ◆ The position No. is switched over according to the following sequence: (1) The position No. cannot be switched over before the xth displacement is not completed. (2) During running of the xth displacement or after positioning is completed, switch off the multi-position reference enable signal and switch over x to y (the servo drive executes the xth displacement again if x is equal to y). (3) After the xth displacement is completed, the servo drive executes the yth displacement if you switch on the multi-position reference enable signal again. ◆ If the S-ON signal is switched off during running of a certain position, the motor stops according to the stop mode set in H02-05. After the motor stops, the positioning completed signal is inactive. ◆ The DI logic change of position reference direction switchover (FunIN.27: PosDirSel) during running of a certain position does not affect the direction of the current position running.

When the multi-position running mode is DI switchover, assign four DI terminals with functions 6 to 9 (FunIN.6: CMD1 to FunIN.9: CMD4, multi-reference switchover) and determine the activation logic of the DI terminals.

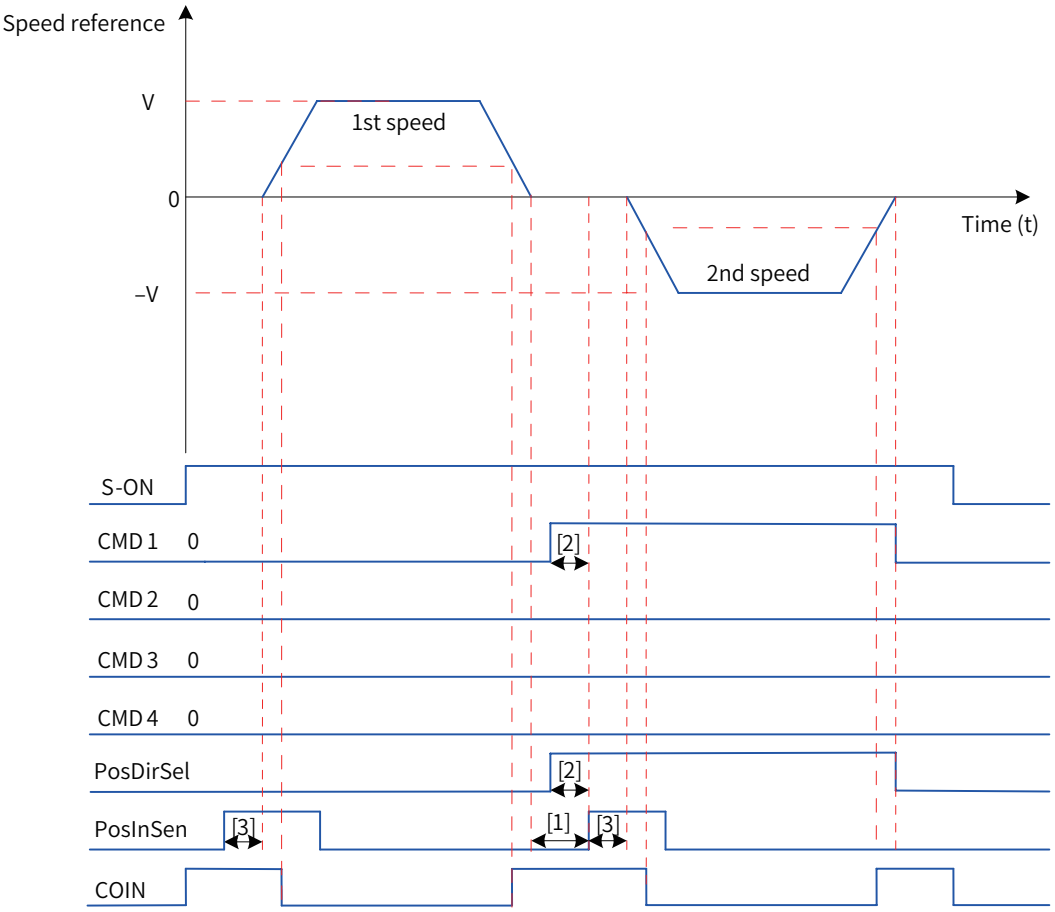

Figure 5-25 Multi-position time sequence

NOTE

◆ [1] Area for position No. switchover, that is, the previous position reference is sent and the PosInSen signal for the next position is switched again.

◆ [2] This signal remains active for at least 3 ms when a low-speed DI terminal is used.

◆ [3] The PosInSen signal is edge-triggered. When a low-speed DI terminal is used, ensure that the effective signal width is at least 3 ms. When a high-speed DI terminal is used, ensure that the effective signal width is at least 0.25 ms.

☆ Related function code:

<table>
<tr><th>Function No.</th><th>Name</th><th>Function Name</th><th>Function</th></tr>
<tr><td>FunIN.6</td><td>CMD1</td><td>Multi-reference switchover 1</td><td rowspan="4">The position No. is a 4-bit binary value. The relationship between CMD1 to CMD4 and the position No. is listed in the following table.
<table><tr><th>CMD4</th><th>CMD3</th><th>CMD2</th><th>CMD1</th><th>Position No.</th></tr><tr><td>0</td><td>0</td><td>0</td><td>0</td><td>1</td></tr><tr><td>0</td><td>0</td><td>0</td><td>1</td><td>2</td></tr><tr><td colspan="5">...</td></tr><tr><td>1</td><td>1</td><td>1</td><td>1</td><td>16</td></tr></table>The DI terminal logic is level valid. The value of CMD(n) is 1 upon active DI logic and 0 upon inactive DI logic.</td></tr>
<tr><td>FunIN.7</td><td>CMD2</td><td>Multi-reference switchover 2</td></tr>
<tr><td>FunIN.8</td><td>CMD3</td><td>Multi-reference switchover 3</td></tr>
<tr><td>FunIN.9</td><td>CMD4</td><td>Multi-reference switchover 4</td></tr>
</table>

■ Sequential operation (H11-00 set to 3)

Table 5-11 Description of sequential operation

Mode Description	Running Curve
◆ The servo drive stops after running for one cycle (H11-05 set to 0 or H11-05 > H11-01). ◆ Cyclic operation is supported and the servo drive starts from the position No. set in H11-05. ◆ The drive automatically switches to the next position. ◆ There is no interval time between positions. ◆ The PoslnSen (Multi-position reference enable) signal is level-triggered.	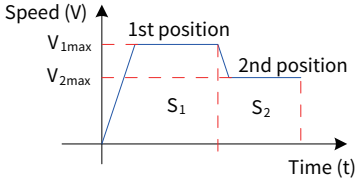 V_{1max} and V2max: maximum operating speeds in position 1 and position 2. S_1 and S_2: 1st displacement and 2nd displacement ◆ The position completed signal is active after each position is completed. ◆ If the multi-position reference enable signal is turned off during running, the servo drive discards the uncompleted displacement and stops. After the servo drive stops, the positioning completed signal is active. ◆ After the multi-position reference enable signal is switched on again, the servo drive starts running from the corresponding position according the setting of H11-02. ◆ If the S-ON signal is switched off during running of a certain position, the motor stops according to the stop mode set in H02-05. After the motor stops, the positioning completed signal is inactive. ◆ The DI logic change of position reference direction switchover ◆ (FunIN.27: PosDirSel) during running of a certain position does not affect the direction of the current position running.

4) Setting the multi-position running curve

The servo drive provides 16 position references. The displacement, maximum running speed, acceleration/deceleration time of each position, and the interval time between positions can be set. The following takes the 1st position as an example.

☆ Related parameters:

Para.	Name	Value Range	Unit	Function	Setting Condition	Effective Time	Default
H11-12	1st displacement	–1073741824 to +1073741824	Reference unit	Sets the sum of the 1st position references.	During operation	Immediately	10000
H11-14	Max. running speed of 1st displacement	1 to 6000	RPM	Defines the maximum speed of 1st displacement.	During operation	Immediately	200
H11-15	Acceleration/Deceleration time of 1st displacement	0 to 65535	ms(s)	Sets the time for the servo motor to accelerate from 0 RPM to 1000 RPM for the 1st displacement.	During operation	Immediately	10
H11-16	Waiting time after 1st displacement	0 to 10000	ms(s)	Sets the interval time after completion of 1st displacement.	During operation	Immediately	10

The actual motor running curve according to the preceding setting is shown in the following figure.

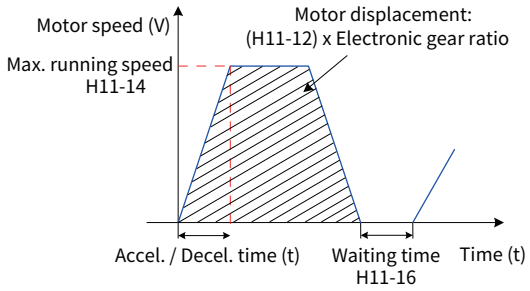

Figure 5-26 Motor running curve of 1st displacement

Actual time t of accelerating to the value of H11-14:

$$t = \frac{(H11\text{-}14)}{1000} \times (H11\text{-}15)$$

For the parameter setting of the other 15 displacements, see Chapter 7.

5) Multi-position reference enable

When using multi-position reference as the position reference source, assign a DI with

FunIN.28 (PosInSen, multi-position reference enable) and determine the activation logic of the DI terminal.

☆ Related function No.:

Function No.	Name	Function Name	Function
FunIN.28	PosInSen	Multi-position reference enable	Valid: Enabled Invalid: Disabled, the servo motor is in the locked state. ◆ Note: When H11-00 is set to 0, 1, or 3, the logic of the DI terminal with the PosInSen signal is level valid. When H11-00 is set to 2, the logic of the DI terminal with the PosInSen signal is edge valid.

2 Position reference direction setting

A DI terminal can be used to change the position reference direction to reverse the motor direction. Assign a DI terminal with

FunIN.27 (PosDirSel, position reference direction selection) and determine the activation logic of the DI terminal.

☆ Related function No.:

Function No.	Name	Function Name	Function
FunIN.27	PosDirSel	Position reference direction selection	Invalid: The actual position reference direction is the same as the set position reference direction. Valid: The actual position reference direction is opposite to the set position reference direction.

The actual motor direction is related to the rotation direction defined in H02-02, positive/negative of position reference, and position reference direction (FunIN.27).

Table 5-12 Motor rotation direction

H02-02	Positive/Negative of Position Reference	FunIN.27	Actual Motor Rotation Direction
0	+	Inactive	Counterclockwise
0	+	Active	Clockwise
0	–	Inactive	Clockwise
0	–	Active	Counterclockwise
1	+	Inactive	Clockwise
1	+	Active	Counterclockwise
1	–	Inactive	Counterclockwise
1	–	Active	Clockwise

3 Position reference inhibited

The servo drive provides the position reference inhibited function (FunIN.13: Inhibit) and pulse input inhibited function (FunIN.37: PulseInhibit).

1) Position reference inhibited

When this function is used, the servo drive forces all position references to zero and does not respond to any internal or external position reference, and makes the motor enter the position lock state. In this case, the servo drive can be switched over to other control modes.

When this function is enabled, the input position reference counter (H0B-13) continues to count the position references. When this function is disabled, the servo drive does not respond to the references counted earlier.

To use this function, assign a DI terminal with function 13 (FunIN.13: Inhibit, position reference inhibited) and determine the activation logic of the DI terminal. The high-speed DI terminal (DI8 or DI9) is recommended.

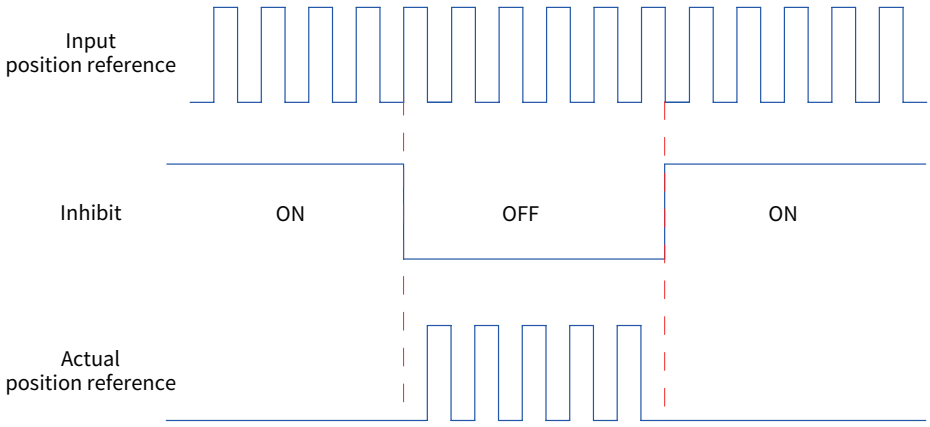

Figure 5-27 Waveform example of position reference inhibited

☆ Related function No.:

Function No.	Name	Function Name	Function
FunIN.13	Inhibit	Position reference inhibited	Invalid: The servo drive responds to position references in the position control mode. Valid: The servo drive does not respond to any internal or external position reference in the position control mode.

2) Pulse input inhibited

When this function is used, the servo drive forces pulses to zero and does not respond to pulses input from the pulse input terminal, but responds to position references of other sources. In this case, the servo drive can be switched over to other control modes.

When this function is enabled, if the position reference source is still pulse input in the position control mode and the pulse input terminal continues to input pulse signals, the input position reference counter (H0B-13) continues to count the pulses, but the servo drive does not respond to them. In the position control mode, if the position reference source is other forms, the counter in H0B-13 continues to count the position references, and the servo drive executes these references.

To use this function, assign a DI terminal with function 37 (FunIN.37: PulseInhibit, pulse input inhibited) and determine the activation logic of the DI terminal. The high-speed DI terminal (DI8 or DI9) is recommended.

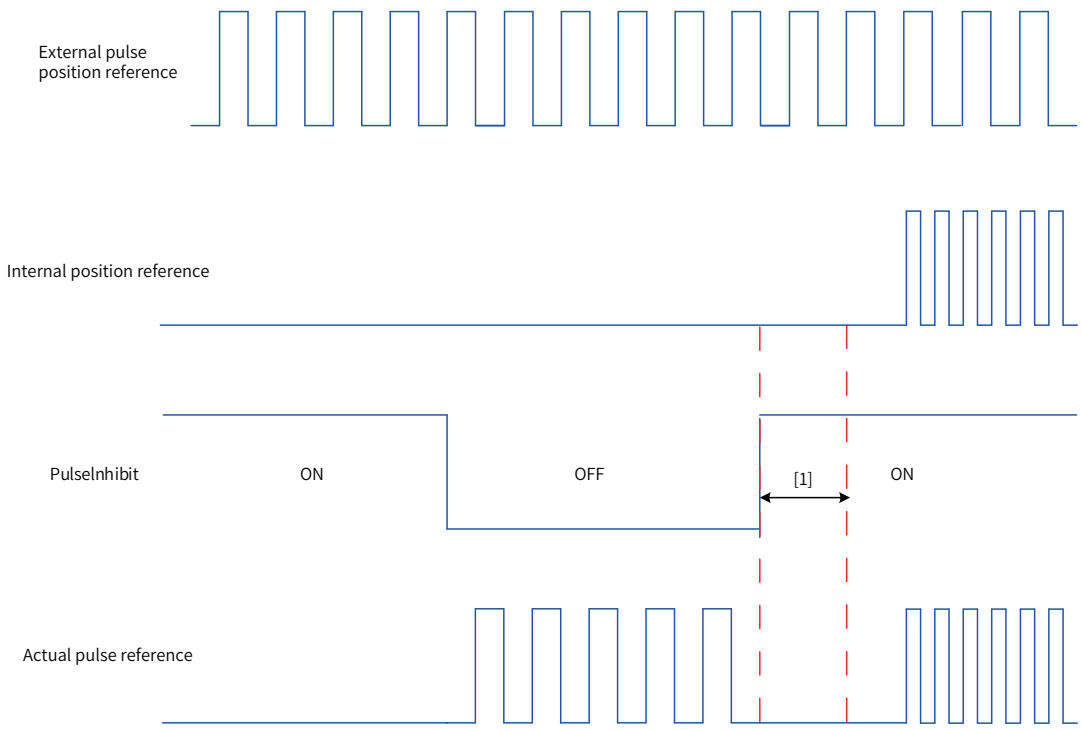

Figure 5-28 Waveform example of pulse input inhibited

NOTE

◆ [1] When a low-speed DI terminal is used, ensure that the delay from input to response of DI terminal signal is at least 3 ms.

◆ When a high-speed DI is used, ensure that the delay is at least 0.25 ms.

☆ Related function No.:

Function No.	Name	Function Name	Function
FunIN.37	PulseInhibit	Pulse input inhibited	When the reference source is set to pulse input (H05-00 set to 0) in the position control mode: Invalid: Respond to pulse input Valid: Not respond to pulse input

5.2.2 Electronic Gear Ratio

CAUTION

◆ The electronic gear ratio must be within the following range:

$$\frac{0.001 \times \text{Encoder resolution}}{10000} < B/A < \frac{4000 \times \text{Encoder resolution}}{10000}$$

◆ Otherwise,

◆ Er.B03 (Electronic gear ratio setting incorrect) occurs.

◆ If the electronic gear ratio is set incorrectly, the servo drive runs incorrectly. In this case, reset the electronic gear ratio after the servo drive stops.

1 Explanation

In the position control mode, the input position reference (reference unit) sets the load displacement, and the motor position reference (encoder unit) sets the motor displacement to specify the ratio of motor position reference to input position ratio so as to introduce the electronic gear ratio function.

Through frequency division (electronic gear ratio smaller than 1) or multiplication (electronic gear ratio greater than 1) of electronic gear ratio, you can set the actual displacement of motor rotation or moving when the input position reference is one reference unit.

★ Terms:

The reference unit means the distinguishable minimum value input from the host controller to the servo drive.

The encoder unit means the value obtained after the input reference is processed by electronic gear ratio.

2 Electronic gear ratio setting procedure

The electronic gear ratio varies with the mechanical structure. Set the electronic gear ratio as follows:

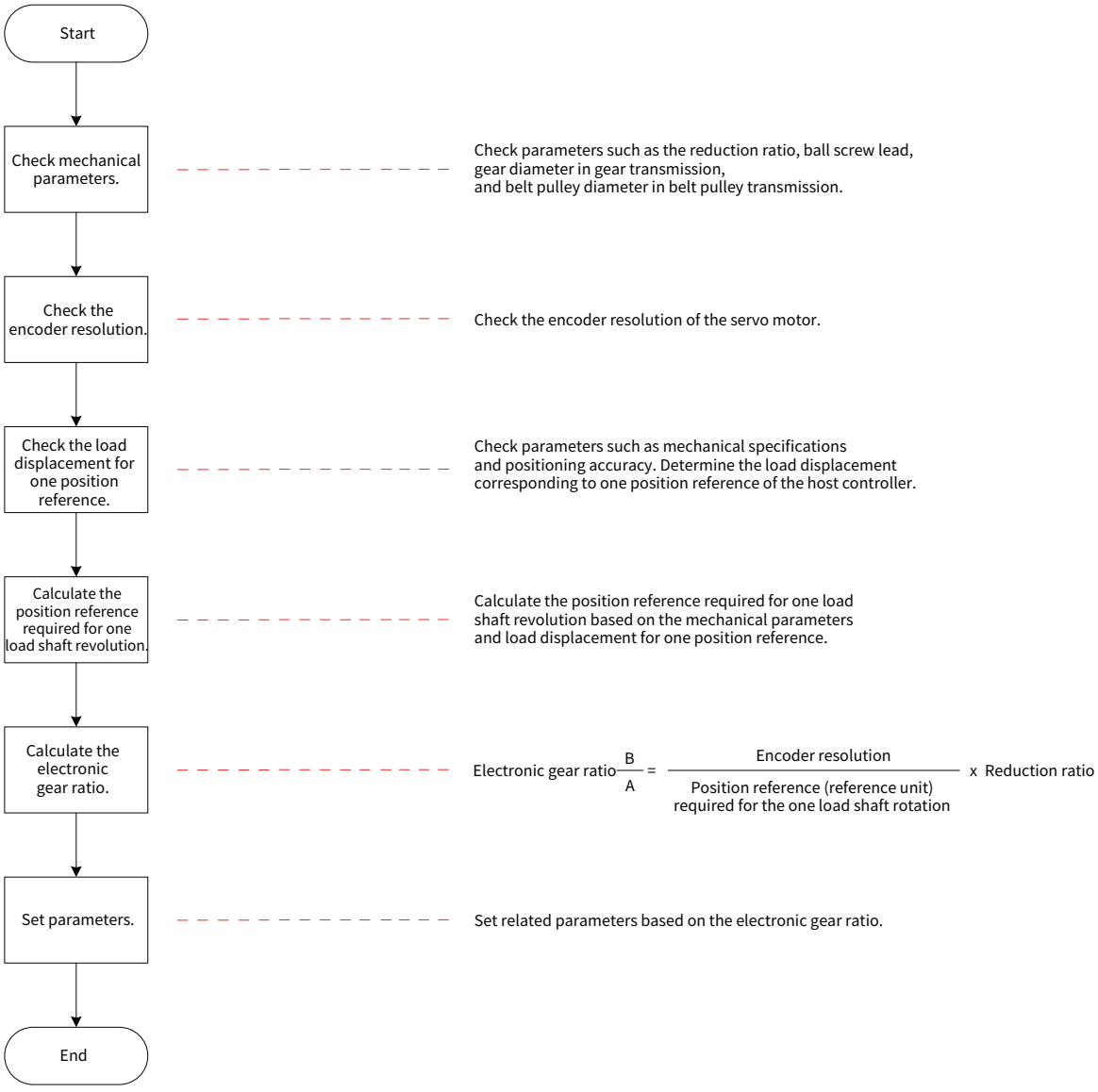

Figure 5-29 Electronic gear ratio setting procedure

The parameter setting procedure is as follows:

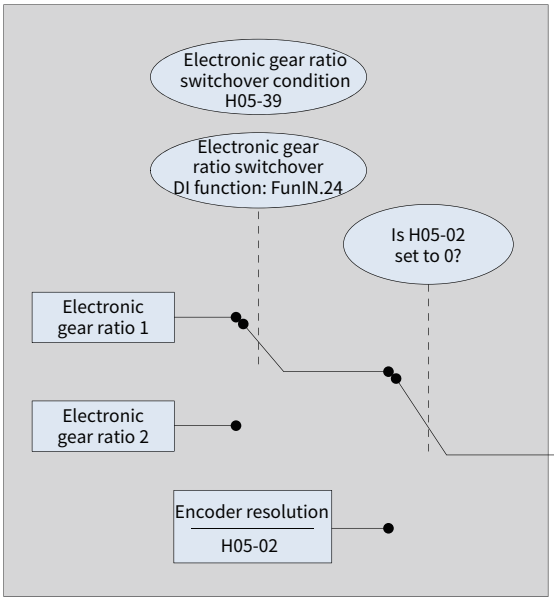

Figure 6-35 Setting the electronic gear ratio

NOTE

◆ When H05-02 (Pulses per revolution) is set to a non-zero value: $\text{Electronic gear ratio } \frac{B}{A} = \frac{\text{Encoder resolution}}{\text{H05-02}}$

In this case, the electronic gear ratio 1 and electronic gear ratio 2 are invalid.

3 Parameter setting

1) Setting electronic gear ratio parameters

☆ Related parameters:

Para.	Name	Value Range	Unit	Function	Setting Condition	Effective Time	Default
H05-02	Pulses per revolution	0 to 1048576	P/r	Sets the number of position references when the motor rotates one revolution.	Immediately	Next power-on	0
H05-07	Electronic gear ratio 1 (numerator)	1 to 1072741824	-	Sets the numerator of the first electronic gear ratio.	During operation	Immediately	1048576
H05-09	Electronic gear ratio 1 (denominator)	1 to 1073741824	-	Sets the denominator of the first electronic gear ratio.	During operation	Immediately	10000
H05-11	Electronic gear ratio 2 (numerator)	1 to 1073741824	-	Sets the numerator of the second electronic gear ratio.	During operation	Immediately	1048576
H05-13	Electronic gear ratio 2 (denominator)	1 to 1073741824	-	Sets the denominator of the second electronic gear ratio.	During operation	Immediately	10000

2) Setting the electronic gear ratio switchover condition

CAUTION

◆ Due to large real-time change of electronic gear ratio or large difference between two electronic gear ratios, the mot speed fluctuates greatly during the switchover. Use the first-order low-pass filter function (H05-04) to enable smooth switchover of position references.

The electronic gear ratio switchover function can be used when H05-02 is set to 0. Determine whether to switch between gear ratio 1 and gear ratio 2 based on the servo drive running condition and set the electronic gear ratio switchover condition. Only one electronic gear ratio is active at any time. The effective time of real-time change on the current electronic gear ratio is also restricted by the switchover conditions.

☆ Related parameters:

Para.	Name	Value Range	Function	Setting Condition	Effective Time	Default
H05-39	Electronic gear ratio switchover condition	0: Switchover if position reference is 0 (F05-02 set to 0) and the duration reaches 2.5 ms 1: Switchover in real time	Defines the electronic gear ratio switchover condition.	At stop	Immediately	0

Allocate function 24 (FunIN.24: GEAR_SEL, electronic gear ratio selection) to one DI terminal of the servo drive and determine the activation logic of the DI terminal.

☆ Related function No.:

Function No.	Name	Function Name	Function
FunIN.24	GEAR_SEL	Electronic gear ratio selection	Invalid: In the position control mode, the first electronic gear ratio is used. Valid: In the position control mode, the second electronic gear ratio is used.

The following table lists the electronic gear ratio used by the servo drive under different conditions:

Table 5-13 Electronic gear ratio

H05-02	H05-39	Level of DI Terminal with FunIN.24	Electronic Gear Ratio $\frac{B}{A}$
0	0	Inactive	$\frac{H05\text{-}07}{H05\text{-}09}$
		Active	$\frac{H05\text{-}11}{H05\text{-}13}$
	1	Inactive	$\frac{H05\text{-}07}{H05\text{-}09}$
		Active	$\frac{H05\text{-}11}{H05\text{-}13}$
1 to 1048576	-		$\frac{\text{Encoder resolution}}{H05\text{-}02}$

For serial encoders, the motor resolution is 2^n (P/r), where n indicates the number of serial encoder bits.

For example, for a 20-bit serial encoder of Inovance, its resolution is 2^{20} (P/r), that is 1048576 (P/r).

For quadrature incremental encoders, the motor resolution is the encoder PPR x 4.

For example, the resolution of Inovance quadrature 2500-PPR incremental encoder is 10000 (P/r).

4 Calculation of electronic gear ratio

The following figure shows the relationship among the position reference (reference unit), load displacement, and electronic gear ratio:

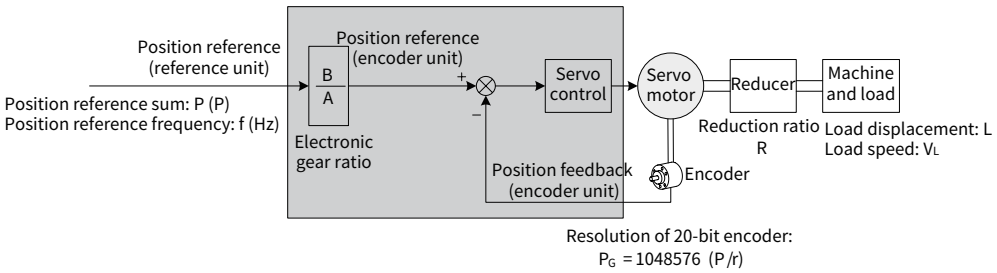

Figure 5-30 Relationship among the position reference (reference unit), load displacement, and electronic gear ratio

Taking rectilinear motion load ball screw as an example. Assume that the lead is p_B (mm), the encoder resolution is P_G, and the reducer reduction ratio is R.

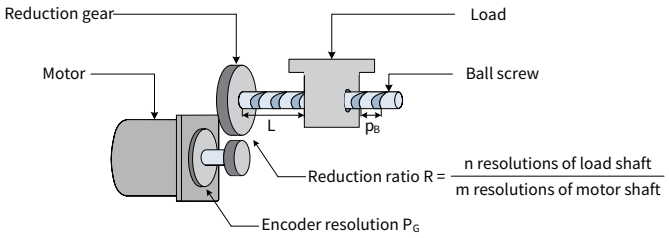

Figure 5-31 Ball screw

1) With the given load displacement ΔL (mm) when one pulse is input to the servo drive

When the mechanical displacement is ΔL, the load axis rotates $\frac{\Delta L}{p_B}$ revolutions while the motor shaft rotates $\frac{\Delta L}{p_B} \times \frac{1}{R}$ revolutions. Then:

$$1 \times \frac{B}{A} = \frac{\Delta L}{p_B} \times \frac{1}{R} \times P_G$$

Therefore, the electronic gear ratio is:

$$\frac{B}{A} = \frac{\Delta L}{p_B} \times \frac{1}{R} \times P_G$$

2) With the given load displacement L (mm) and total number of positions references P (P)

When the mechanical displacement is L, the load axis rotates $\frac{L}{p_B}$ revolutions while the motor shaft rotates $\frac{L}{p_B} \times \frac{1}{R}$ revolutions. Then:

$$P \times \frac{B}{A} = \frac{L}{p_B} \times \frac{1}{R} \times P_G$$

Therefore, the electronic gear ratio is:

$$\frac{B}{A} = \frac{L}{p_B} \times \frac{1}{R} \times P_G \times \frac{1}{P}$$

3) With the given load moving speed v_L (mm/s) and position reference frequency f (Hz)

Load shaft speed: $\frac{v_L}{p_B}$ (r/s)

Motor speed: $v_M = \frac{v_L}{p_B} \times \frac{1}{R}$ (r/s)

The relationship among the position reference frequency, electronic gear ratio, and motor speed is:

$$f \times \frac{B}{A} = v_M \times P_G$$

Therefore, the electronic gear ratio is: $\frac{B}{A} = \frac{v_M \times P_G}{f}$

5 Electronic gear ratio setting example

Table 5-14 Electronic gear ratio setting example

Step	Name	Mechanical Structure		
		Ball screw drive	Belt pulley drive	Rotate load
		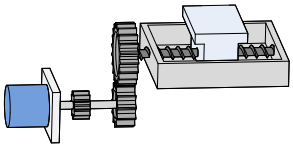	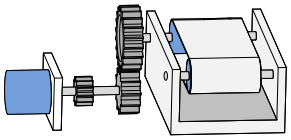	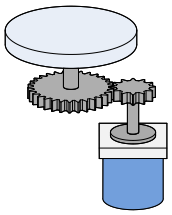
1	Mechanical parameter	Reduction ratio R: 1:1 Screw pitch: 0.01 m	Reduction ratio R: 5:1 Belt pulley diameter: 0.2 m (Belt pulley circumstance: 0.628 m)	Reduction ratio R: 10:1 Load rotation angle when the load axis rotates one revolution: 360°
2	Encoder resolution	20 bit = 1048576 P/r	20 bit = 1048576 P/r	20 bit = 1048576 P/r
3	Load displacement to one position reference (reference unit)	0.0001 m	0.000005 m	0.01°
4	Position reference (reference unit) value required for the load axis to rotate one revolution	$\frac{0.01}{0.0001} = 100$	$\frac{0.628}{0.000005} = 125600$	$\frac{360}{0.01} = 36000$
5	Calculation	$\frac{B}{A} = \frac{1048576}{100} \times \frac{1}{1}$	$\frac{B}{A} = \frac{1048576}{125600} \times \frac{5}{1}$	$\frac{B}{A} = \frac{1048576}{36000} \times \frac{10}{1}$
6	Setting	H05-07 = 1048576 H05-09 = 100	H05-07 = 5242880 H05-09 = 125600	H05-07 = 10485760 H05-09 = 36000

5.2.3 Position Reference Filter

This function filters the position references (encoder unit) divided or multiplied by the electronic gear ratio. It involves first-order low-pass filter and moving average filter.

It is applicable to the following scenarios:

- The acceleration/deceleration process is not performed on the position references sent from the host controller.
- The pulse reference frequency is low.
- The electronic gear ratio is greater than 10.

☆ Related parameters:

Para.	Name	Value Range	Unit	Function	Setting Condition	Effective Time	Default
H05-04	First-order low-pass filter time constant	0 to 6553.5	ms	Sets the time constant of first-order low-pass filter for position reference (encoder unit).	At stop	Immediately	0.0
H05-06	Moving average filter time constant	0 to 128.0	ms	Sets the time constant of moving average filter for position reference (encoder unit).	At stop	Immediately	0.0

NOTE

◆ This function does not affect the displacement value (position reference sum).

An excessively high setpoint delays the response. Set a proper filter time constant based on actual conditions.

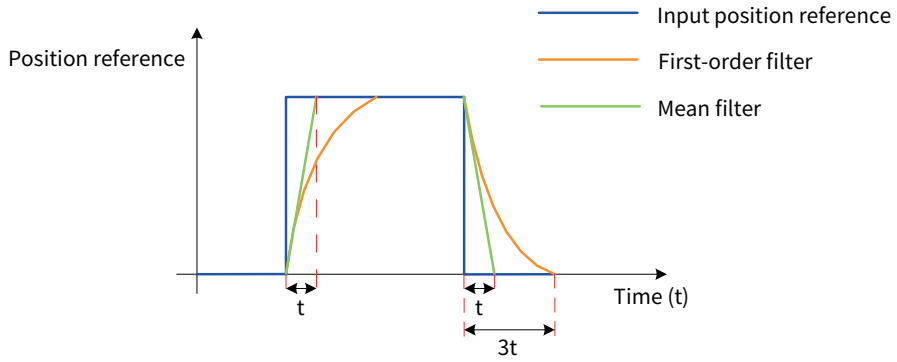

Figure 5-32 First-order filter and moving average filter of rectangular position reference

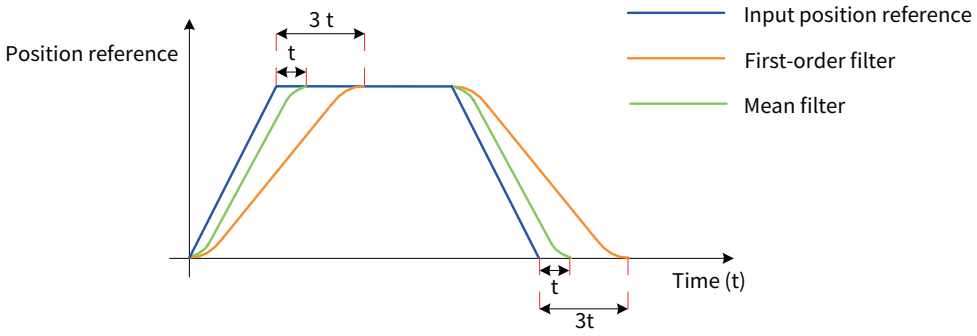

Figure 5-33 First-order filter and moving average filter of trapezoid position reference

5.2.4 Position Deviation Cleared

Position deviation = (Position reference – Position feedback) (encoder unit)

This function enables the servo drive to clear the position deviation when certain conditions set in H05-16 are met.

☆ Related parameters:

Para.	Name	Value Range	Function	Setting Condition	Effective Time	Default
H05-16	Clear action	0: Clear position deviation when S-ON is switched off or when a fault occurs 1: Clear position deviation pulse when S-ON is switched off or when a fault occurs 2: Clear position deviation when S-ON is switched off or when the ClrPosErr signal is input from DI	Defines the condition for clearing the position deviation.	At stop	Immediately	0

When H05-16 is set to 2, allocate function 35 (FunIN.35: ClrPosErr, position deviation cleared) to one DI terminal of the servo drive and determine the activation logic of the DI terminal. The high-speed DI terminal (DI8 or DI9) is recommended.

☆ Related function No.:

Function No.	Name	Function Name	Function
FunIN.35	ClrPosErr	Position deviation cleared	Valid: Position deviation cleared Invalid: Position deviation not cleared

Set the function as follows:

Table 6-18 Setting of position deviation cleared

Value	Clear Condition	Clear Time
H05-16 = 0	The position deviation is cleared when the S-ON signal is switched off or the servo state is not "run".	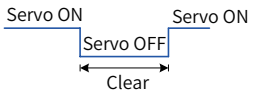
H05-16 = 1	The position deviation is cleared when the S-ON signal is switched off or a fault or warning occurs.	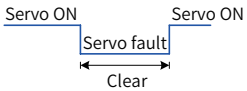
H05-16 = 2	The position deviation is cleared when the S-ON signal is switched off or the DI terminal with this function is logic valid. The recommended logic is edge valid.	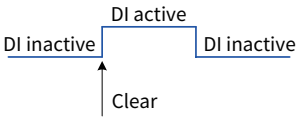 (Rising edge valid)
		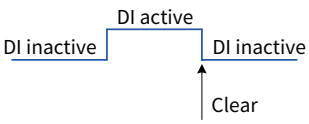 (Falling edge valid)

5.2.5 Frequency-Division Output

CAUTION

- In the fully closed-loop control mode, the frequency-division output function cannot be used, and the frequency-division output terminal is used as the input terminal of external optical scale signal.
- It is recommended to use the active edge outputted by Z signal when a high precision frequency-division output of Z signal is required.
- When H05-41 is 0, the effective change edge is falling edge.
- When H05-41 is 1, the effective change edge is rising edge.

The frequency-division output function outputs the position pulses or encoder feedback position pulses as A/B phase quadrature pulses.

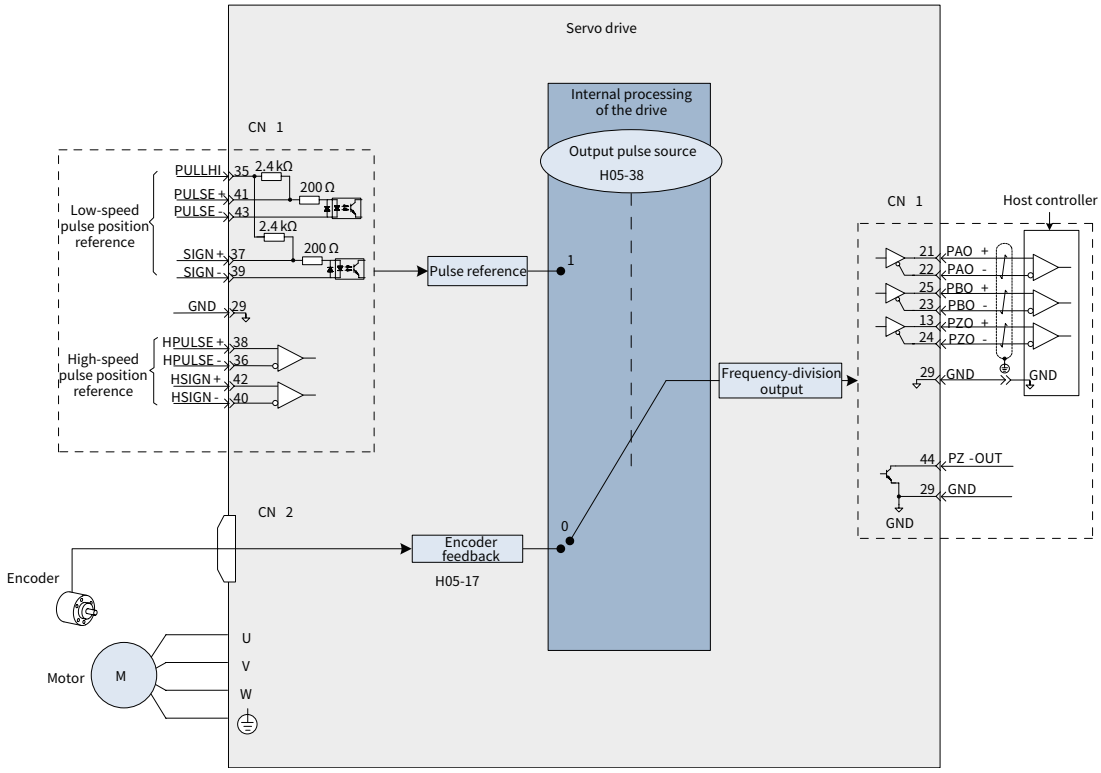

Figure 5-34 Schematic diagram of frequency-division output

When pulse synchronous tracking of the multi-axis servo is required, pulse synchronous output (H05-38 set to 1) is recommended. When the host controller provides closed-loop feedback, encoder frequency-division output (H05-38 set to 0) is recommended.

The servo drive provides one set of frequency-division output terminals:

Phase A pulse: PAO+ and PAO–, differential output, max. output pulse frequency: 2 Mpps

Phase B pulse: PBO+ and PBO–, differential output, max. output pulse frequency: 2 Mpps

Phase Z pulse: PZO+ and PZO–, differential output, max. output pulse frequency: 2 Mpps

PZ-OUT: GND, open collector output, 100 kpps

When using frequency-division output, set the output pulse source (H05-38), phase (H02-03), resolution (H05-17), and phase Z pulse polarity (H05-41) according to requirements.

When the output source is encoder frequency-division output (H05-38 to 0), the output pulses of phases A and B per motor revolution are determined by H05-17 and H05-61 (Number of encoder frequency-division pulses). The pulse width T of phases A and B is determined by the motor speed. Phase Z is synchronous with phase A and its width is T. Z signal is output once per motor revolution.

Table 5-15 Pulse diagrams of encoder frequency-division output (H05-38 set to 0)

H02-03 (Output Pulse Phase)	H05-41 (Z Pulse Output Polarity)	Pulse Output Diagram of Forward RUN	Pulse Output Diagram of Reverse RUN
0	0	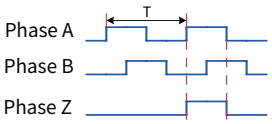 Phase A leads phase B by 90° .	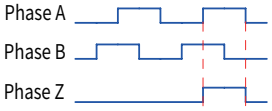 Phase B leads phase A by 90° .
	1	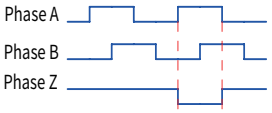 Phase A leads phase B by 90° .	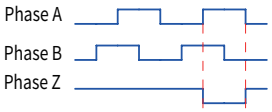 Phase B leads phase A by 90° .
1	0	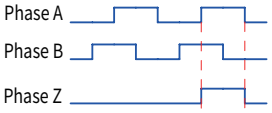 Phase B leads phase A by 90° .	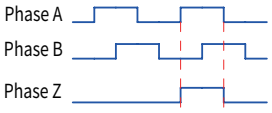 Phase A leads phase B by 90° .
	1	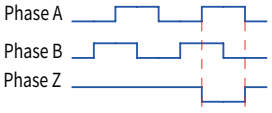 Phase B leads phase A by 90° .	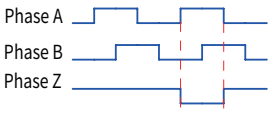 Phase A leads phase B by 90° .

☆ Related parameters:

Para.	Name	Value Range	Unit	Function	Setting Condition	Effective Time	Default
H02-03	Output pulse phase	0: Phase A leads phase B 1: Phase A lags behind phase B	-	Defines the phase relationship between Phase A pulse and phase B pulse.	At stop	Next power-on	0
H05-17	Number of encoder frequency-division pulses	35 to 32767	p/r	Sets the number of pulses output by PAO or PBO (before 4-frequency multiplication) per motor revolution when the value of H05-61 is smaller than 35.	At stop	Next power-on	2500
H05-38	Servo pulse output source	0: Encoder frequency-division output 1: Pulse reference synchronous output 2: Frequency division or synchronous output inhibited	-	Defines the servo pulse output source.	At stop	Next power-on	0

H05-41	Z pulse output polarity	0: Positive (pulse Z being high level) 1: Negative (pulse Z being low level)	-	Defines the output level when the phase Z pulse is valid.	At stop	Next pow-er-on	1
H05-61	Number of encoder frequency-division pulses (32-bit)	0 to 262143	p/r	Sets the number of pulses output by PAO or PBO (before 4-frequency multiplication) per motor revolution when the value of H05-61 is greater than or equal to 35.	At stop	Next pow-er-on	0

5.2.6 Positioning Completed/Near

Internal reference completed: When the internal multi-position reference is 0, the servo drive outputs the internal reference completed signal (CmdOk). After receiving this signal, the host controller determines that all multi-position references are sent.

Positioning completed: When the position deviation meets the condition set in H05-20, the servo drive outputs the positioning completed signal (COIN). After receiving this signal, the host controller determines that positioning is completed.

The following figure shows the schematic diagram.

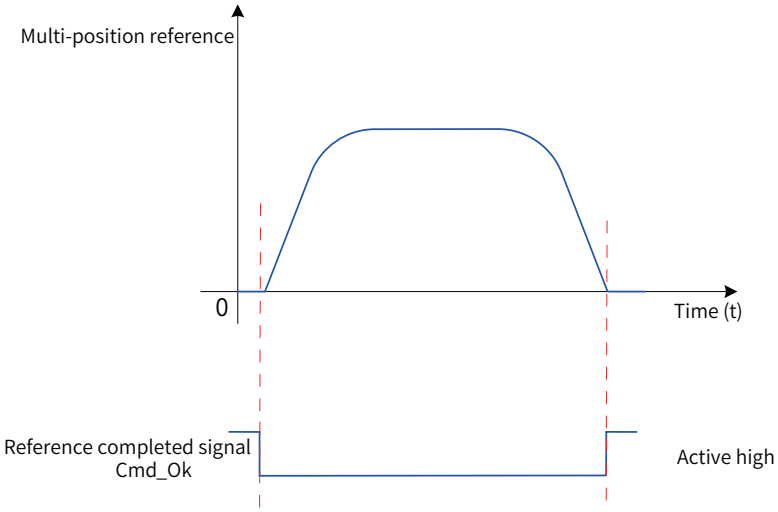

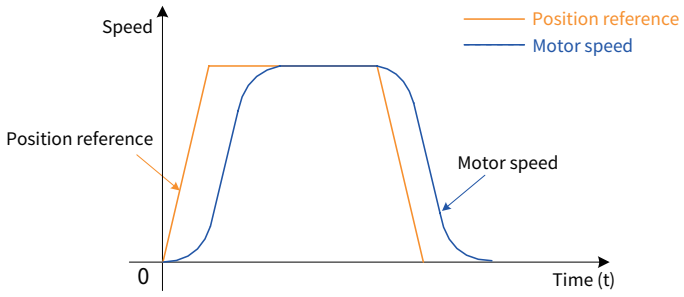

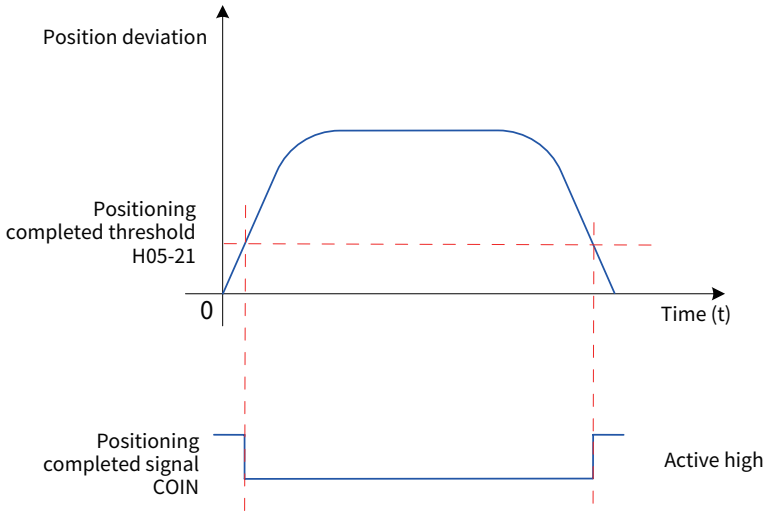

Figure 5-35 Diagram of positioning completed function

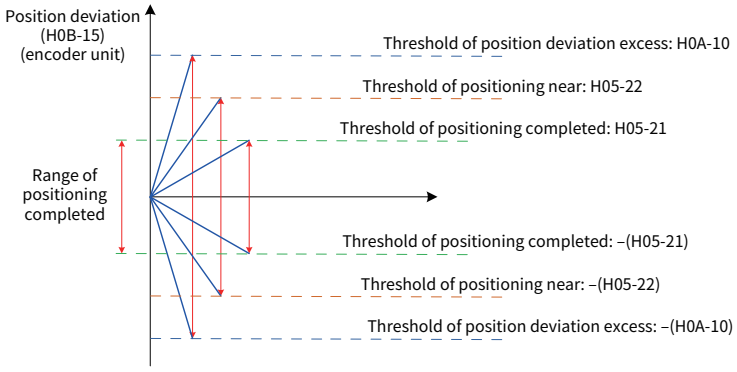

Figure 5-36 Position deviation-related signals

The reference unit of positioning completed, positioning near, and excessive position deviation is selected in H0A-17. When the position deviation meets the condition set in H05-20, the servo drive also outputs the positioning near signal (NEAR). The host controller sends the positioning near signal to the servo drive before confirming positioning completed, so that the servo drive prepares for the positioning completed action.

Before using the positioning completed or near function, set the output condition, deviation threshold, time window, and holding time. The following figure shows the schematic diagram of positioning completed time window and holding time.

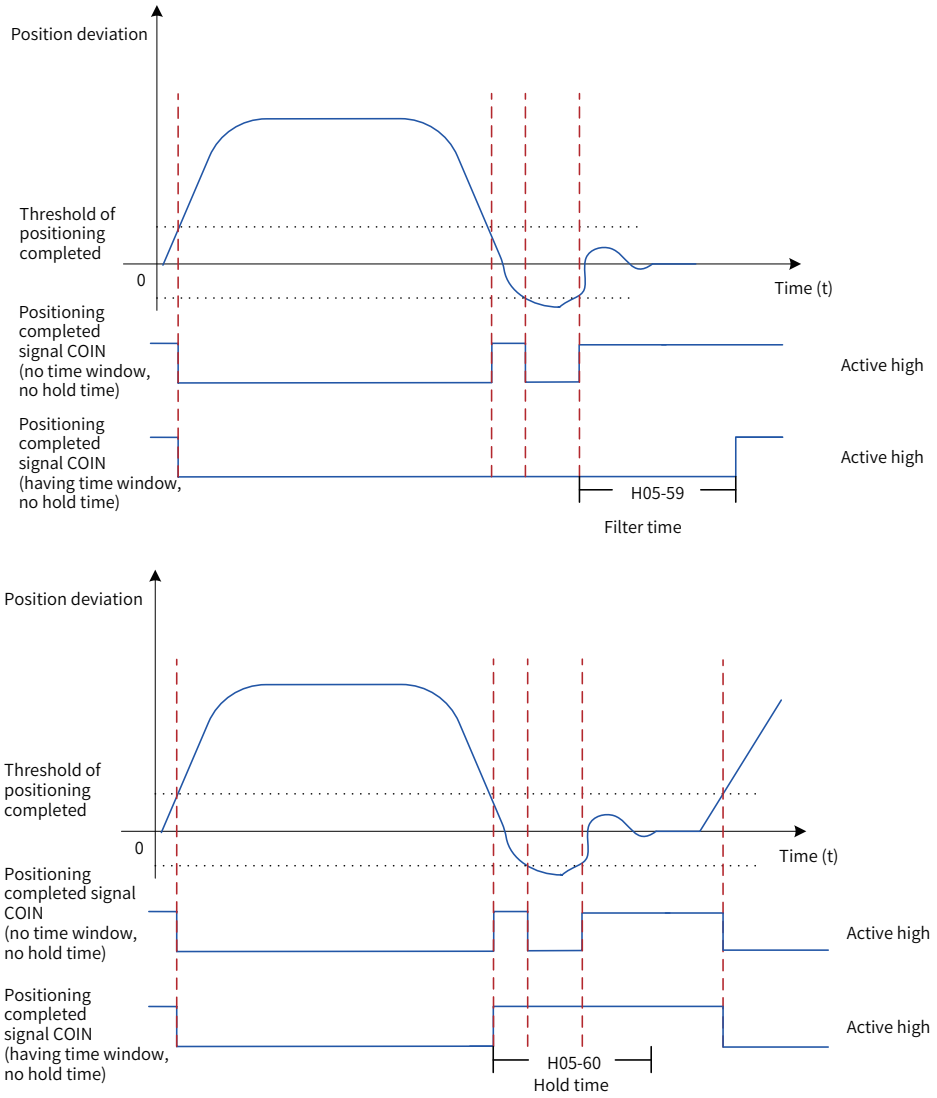

Figure 5-37 Diagram of positioning completed time window and holding time

When the holding function for positioning completed output is used, the value 0 indicates that the positioning completed signal remains active until the moment when the position reference is received for the next time.

☆ Related parameters:

Para.	Name	Value Range	Unit	Function	Setting Condition	Effective Time	Default
H0A-17	Position setting unit	0-1	-	Position setting unit 0: Encoder unit 1: Reference unit	At stop	Immediately	0

H05-20	Condition for positioning completed/ near signal output	0: Absolute value of position deviation is smaller than the value of H05-21/H05-22 1: Absolute value of position deviation is smaller than the value of H05-21/H05-22 and the position reference after filtering is 0 2: Absolute value of position deviation is smaller than the value of H05-21/H05-22 and the position reference is 0 3: Absolute value of position deviation is smaller than the value of H05-21/H05-22 and the position reference is 0, and the positioning completed/near signal is hold for the time set in H05-60	-	Sets the output condition of the COIN or NEAR signal.	During operation	Immediately	0
H05-21	Positioning completed threshold	1 to 65535	Encoder/ reference unit	Defines the threshold of the absolute value of position deviation when the drive outputs the COIN signal.	During operation	Immediately	734
H05-22	Positioning near threshold	1 to 65535	Encoder/ reference unit	Defines the threshold of the absolute value of position deviation when the drive outputs the NEAR signal.	During operation	Immediately	65535
H05-59	Positioning window time	0 to 30000	ms	Defines the time threshold when the positioning completed signal outputs the valid level.	During operation	Immediately	0
H05-60	Positioning completed holding time	0 to 30000	ms	Defines the hold time of the positioning completed signal being valid.	During operation	Immediately	0

CAUTION

- ◆ H05-22 must be greater than H05-21.
- ◆ H05-21 reflects only the absolute threshold when the positioning completed signal is active. It is irrelevant to the positioning accuracy.
- ◆ When the speed feedforward gain (H08-19) is large or the servo drive runs at a low speed, the absolute position deviation is small. A large value of H05-21 in this case will cause the positioning completed signal to be always active. Decrease H05-21 to improve the effectiveness of this signal.
- ◆ When both the value of H05-21 and the position deviation are small, change the output condition of positioning completed/near signal in H05-20.
- ◆ When the S-ON signal is inactive, the COIN and NEAR signals are also inactive.

To use the internal reference completed, positioning completed, and positioning near functions, assign three DO terminals of the servo drive with function 22 (FunOUT.22: CmdOk, reference completed), function 5 (FunOUT.5: COIN, positioning completed), and function 6 (FunOUT.6: NEAR, positioning near) respectively, and determine the activation logic of the terminals.

☆ Related function No.:

Function No.	Name	Function Name	Function
FunOut.5	COIN	Positioning completed	Valid: In the position control mode, when the absolute position deviation meets the condition set in H05-21, the positioning is completed. Invalid: In the position control mode, the servo drive is performing positioning.
FunOut.6	NEAR	Positioning near	Valid: In the position control mode, when the absolute position deviation meets the condition set in H05-22, the positioning is near to completed. Invalid: In the position control mode, the servo drive is performing positioning.

5.2.7 Interrupt Positioning

CAUTION



◆ The interrupt positioning signal cannot be switched on when the homing function is used.

1 Function Description

This function allows the servo drive to interrupt during running and execute the preset position reference with fixed length in the position control mode. When the S-ON signal is active in the position control mode, if this function is enabled, the servo motor runs the position reference for interrupt positioning in the direction before the function is triggered.

During interrupt positioning, the servo drive shields any other internal or external position reference (including the position reference for triggering this function again), and the input position reference counter in H0B-13 counts only the position references for this function. After running of this function is completed, the servo drive keeps shielding or responds to position references according to the setting of H05-29, but discards the position references input in the running process.

After interrupt positioning is completed, the servo drive outputs the interrupt positioning completed signal (FunOUT.15: XintCoin) and positioning completed signal (FunOUT.5: COIN). After receiving the interrupt positioning completed signal, the host controller confirms that interrupt positioning is completed. The output of the interrupt positioning signal is irrelevant to the S-ON signal and DI9 terminal logic.

This function takes effect on the following conditions:

- Before this function is triggered, the motor speed is greater than or equal to 10 RPM or H05-26 is set to a non-zero value.
- H05-24 is set to a non-zero value.
- FunIN.33 (Interrupt positioning inhibited) is not enabled or the DI terminal logic is invalid.



NOTE

◆ The moving average filter is invalid when the interrupt positioning function is used.

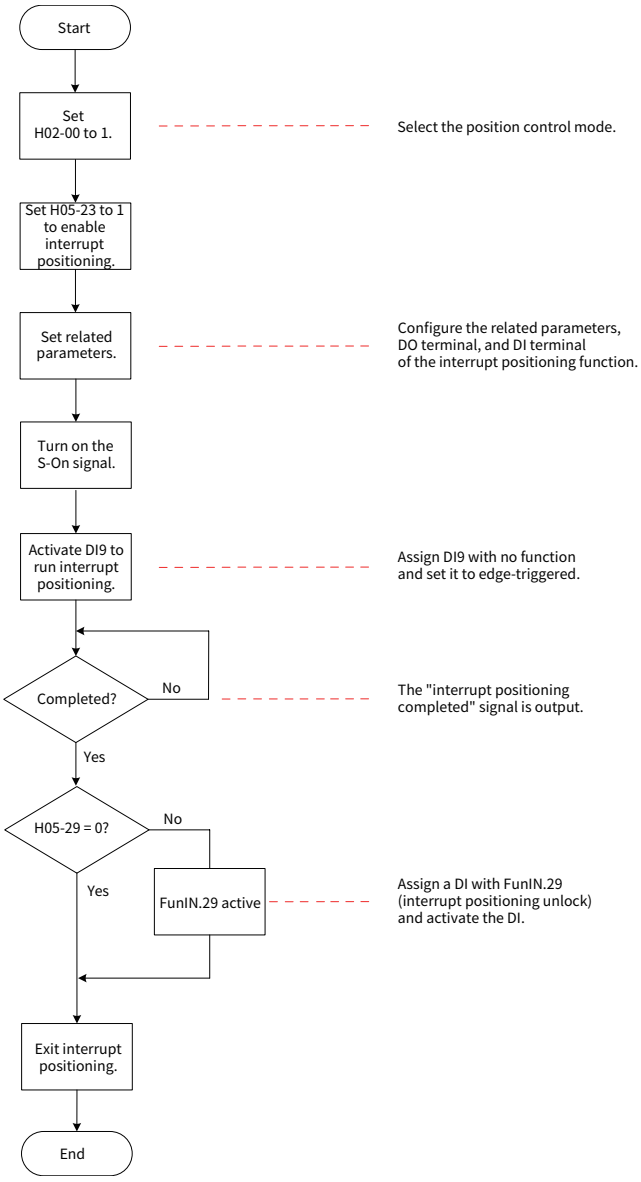

Figure 5-38 Setting flowchart of interrupt Positioning

1) Setting parameters

☆ Related parameters:

Para.	Name	Value Range	Unit	Function	Setting Condition	Effective Time	Default
H05-23	Interrupt positioning selection	0: Disabled 1: Enabled	-	Defines whether to enable interrupt positioning.	At stop	Next power-on	0
H05-24	Displacement of interrupt positioning	0 to 1073741824	Reference unit	Sets the displacement of interrupt positioning.	During operation	Immediately	10000
H05-26	Constant running speed at interrupt positioning	0 to 6000	RPM	Sets the maximum speed during interrupt positioning, irrelevant to the electronic gear ratio.	During operation	Immediately	200

H05-27	Acceleration/Deceleration time of interrupt positioning	0 to 1000	ms	Sets the time for the motor to accelerate from 0 RPM to 1000 RPM.	During operation	Immediately	10
H05-29	Interrupt positioning cancellation signal selection	0: Disabled 1: Enabled	-	Sets the conditions for the servo drive to correspond to other position references after interrupt positioning is completed. When H05-29 is set to 1, a DI with FunIN.29 (Interrupt positioning cancel signal selection) must be used to exit the interrupt positioning function.	During operation	Immediately	1

☆ Related function No.:

Function No.	Name	Function Name	Function
FunIN.29	XintFree	Interrupt positioning cancel	Valid: The interrupt positioning state is unlocked, and the servo drive can respond to other position references. Invalid: The interrupt positioning state is retained, and the servo drive cannot respond to other position references.
FunIN.33	XintInHibit	Interrupt positioning inhibited	Valid: Interrupt positioning inhibited Invalid: Interrupt positioning permitted
FunOut.15	XintCoin	Interrupt positioning completed signal	Valid: In the position control mode, interrupt positioning completed In valid: In the position control mode, interrupt positioning not completed

CAUTION

◆ When the interrupt positioning function is used, the servo drive forces the high-speed terminal DI9 as the triggering terminal. This function is invalid when other terminals are forced as the triggering terminal. DI9 (H03-18) must not be allocated with other functions and the terminal logic (H03-19) must be edge valid. If not, the servo drive forces it to edge valid.

Table 5-16 DI9 logic for interrupt positioning

H03-19	DI9 Logic	Waveform
0 / 3	Falling edge	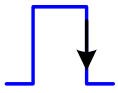
1 / 2	Rising edge	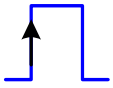
4	Rising edge and falling edge	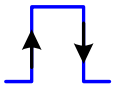

The constant running speed at interrupt positioning is shown in the following figure.

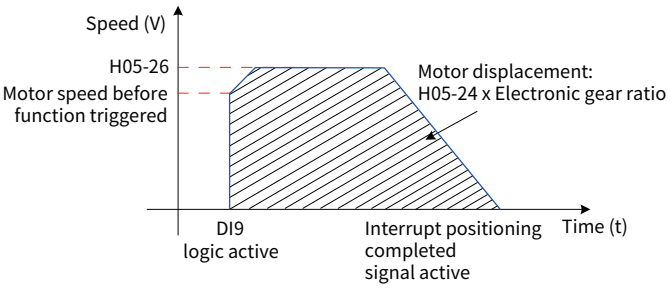

Figure 5-39 Motor running curve of interrupt positioning

Table 5-17 Motor speed for interrupt positioning

H05-26	Motor speed before function triggered	Interrupt Positioning	Constant running speed at interrupt positioning
0	< 10	Inactive	-
	⩾ 10	Active	Motor speed before function triggered
1 to 6000	-	Active	H05-26

5.2.8 Homing

CAUTION

◆ The homing signal is shielded when the interrupt positioning or multi-position function is running.

1 Function Description

Home: the mechanical home, that is, the position of the home switch or motor Z signal, determined by H05-31.

Zero: the positioning target point, expressed as home + offset, determined by H05-36. When H05-36 is set to 0, the zero position is the same as the home.

Homing function: When the S-ON signal is active in the position control mode, the servo motor actively searches for the zero position and completes positioning if the homing function is triggered.

During the homing operation, the servo drive shields other position references (including the homing reference triggered again). After the homing operation is completed, the servo drive can respond to other position references.

This function includes homing and electrical homing.

Home retaining: After receiving the homing signal, the servo drive actively locates the relative position between the motor shaft and the preset mechanical home reference point, finds the home, and then moves through the offset from the home reference point to the zero point. This mode is used for locating the zero position for the first time.

Electrical homing: After locating the absolute zero position, the servo drive moves a certain displacement from the current position.

After the homing operation is completed (including homing and electrical homing), the absolute motor position (H0B-07) is the same as the mechanical home offset (H05-36).

After the homing operation is completed, the servo drive outputs the homing completed signal (FunOUT.16: HomeAttain) or electrical homing completed signal (FunOUT.17: ElecHomeAttain). After receiving the signal, the host controller confirms that the homing operating is completed. These two signals are irrelevant to the servo mode and running state.

Table 5-18 Comparison between homing and electrical homing

Action	Homing Mode (H05-30)	Homing Direction, Deceleration Point, and Home	Signal Source	Total Motor Displacement
Homing	0	-	-	-
	1	Determined by H05-31	HomingStart	Determined by the mechanical home coordinate and offset displacement
	3		S-ON	
	4		S-ON	
	6	-	-	-

Electrical homing	2	The homing direction is consistent with the motor displacement sign (+/–). The deceleration point and home signals are not required.	HomingStart	(H05-36 – H0B-07) x Electronic gear ratio
	5		S-ON	

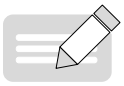

NOTE

◆ Both the moving average filter and low-pass filter are invalid when the homing function is used.

2 Homing

CAUTION

◆ To prevent machine crash due to high speed during the homing process, set the mechanical limit switches before using the homing function. If homing with hit and stop is used and the mechanical offset is involved, set the offset within the travel range.

◆ If the motor reaches the limit switch during homing, the servo drive reports Er.950 (Positive limit warning) or Er.952 (Negative limit warning). If H05-40 is set to 0 or 1, the motor stops according to the mode set in H02-07.

The following takes an example to describe homing:

- H05-31 set to 0: Forward homing, deceleration point and home being home switch
- H05-31 set to 2: Forward homing, deceleration point and home being motor Z signal
- H05-31 set to 4: Forward homing, deceleration point being home switch and home being motor Z signal
- H05-31 set to 6: Forward homing, deceleration point and home being positive limit switch
- H05-31 set to 8: Forward homing, deceleration point being positive limit switch and home being motor Z signal
- H05-31 set to 10: Forward homing, deceleration point and home being mechanical final limit position
- H05-31 set to 12: Forward, deceleration point being mechanical final limit position and home being motor Z signal

The other homing modes are the same as the above except that the direction is opposite.

1) H05-31 set to 0: Forward homing, deceleration point and home being home switch

① The home switch (deceleration point) signal is inactive (0: inactive; 1: active) when the motor starts to run, and the positive limit switch is not sensed in the entire process.

The servo motor searches for the deceleration point signal in the forward direction at high speed set in H05-32. After reaching the rising edge of the deceleration point signal, the motor decelerates to –(H05-33) according to the time set in H05-34. The motor searches for the falling edge of the deceleration point signal in the reverse direction at low speed of –(H05-33). After reaching the falling edge of the deceleration point signal, the motor then changes to the forward direction, and searches for the rising edge of the home signal at the low speed of H05-33. During forward acceleration or forward constant speed running, the motor stops immediately after reaching the rising edge of the home signal.

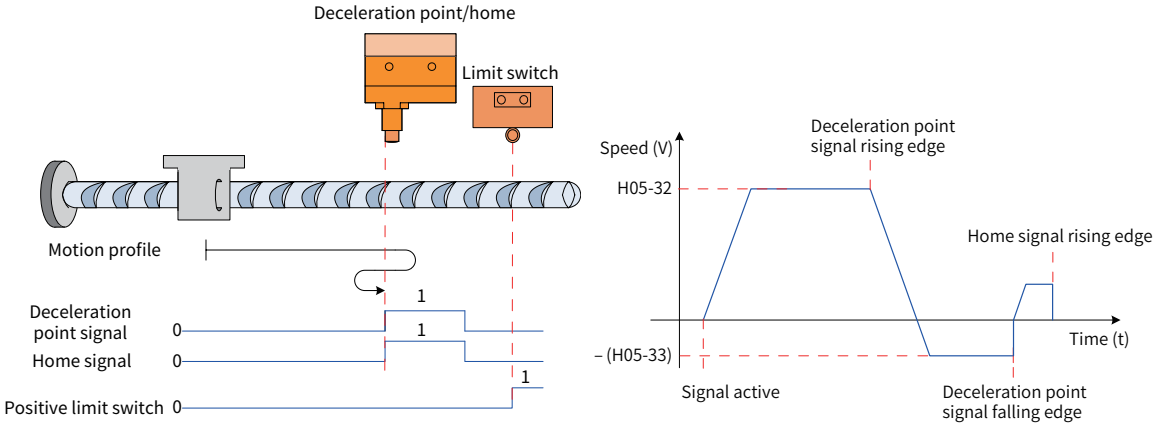

Figure 5-40 Motor running curve 1 and speeds in mode 0

② The home switch (deceleration point) signal is active when the motor starts to run, and the positive limit switch is not sensed in the entire process.

The servo motor directly searches for falling edge of the deceleration point signal in the reverse direction at low speed of –(H05-33). After reaching the falling edge of the deceleration point signal, the motor changes to the forward direction, and searches for the rising edge of the home signal at the low speed of H05-33. During forward acceleration or forward constant speed running, the motor stops immediately after reaching the rising edge of the home signal.

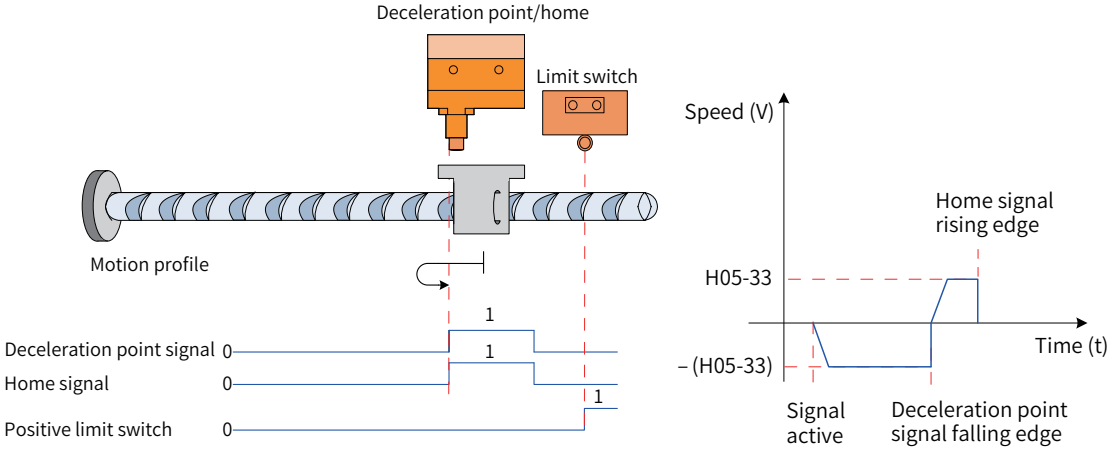

Figure 5-41 Motor running curve 2 and speeds in mode 0

③ The home switch (deceleration point) signal is inactive when the motor starts to run, and the positive limit switch is sensed in the process.

The servo motor searches for the deceleration point signal in the forward direction at high speed of H05-32. After sensing the positive limit switch, the servo drive implements reverse homing (H05-40 set to 2 or 3) immediately or stops and waits for the homing signal re-sent by the host controller (H05-40 set to 0 or 1). After the condition is met, the servo drive searches for the falling edge of the deceleration point signal in the reverse direction at high speed of –(H05-32). After reaching the falling edge of the deceleration point signal, the motor then decelerates and restores to the forward direction according to the time set in H05-34, and searches for the rising edge of the home signal at low speed of H05-33. During forward acceleration for forward constant speed running, the motor stops immediately after reaching the rising edge of the home signal.

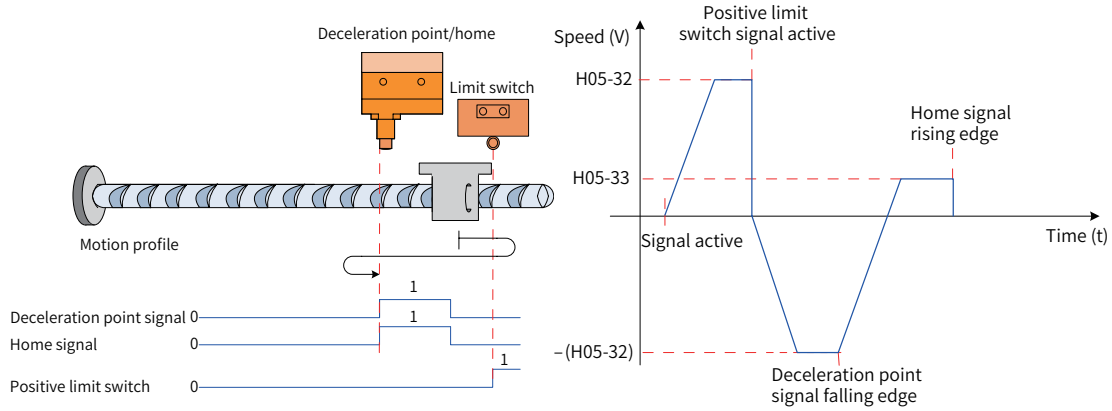

Figure 5-42 Motor running curve 3 and speeds in mode 0

2) H05-31 set to 2: Forward homing, deceleration point and home being motor Z signal

CAUTION

◆ In the mode where Z signal is used to judge the deceleration point and home (H05-31 set to 2 or 3), the actual motor stop position may be on a different side from the rising edge of the Z signal, and there is a deviation of ±1 pulse (encoder unit).

① The Z signal is inactive (0: inactive; 1: active) when the motor starts to run, and the positive limit switch is not sensed in the entire process.

The servo motor searches for the Z signal in the forward direction at high speed of H05-32. After reaching the rising edge of the Z signal, the motor decelerates and changes to the reverse direction according to the time set in H05-34, and accelerates to –(H05-33). During reverse acceleration or reverse constant speed running, the motor immediately stops after reaching the Z signal rising edge of the other side.

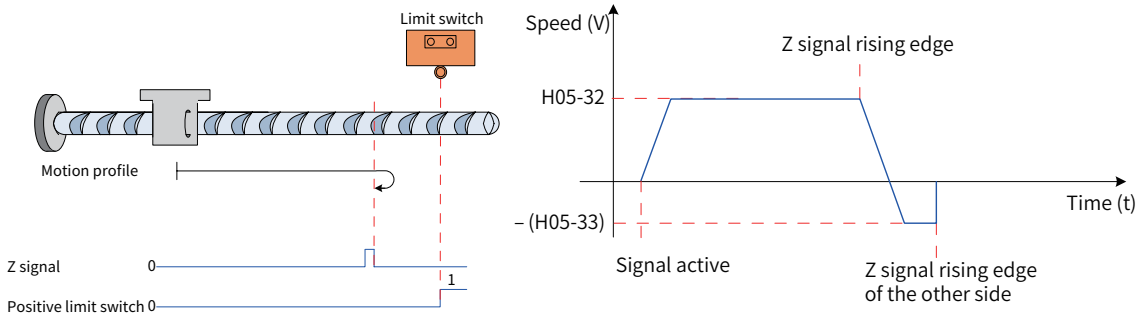

Figure 5-43 Motor running curve 1 and speeds in mode 2

② The Z signal is active when the motor starts to run, and the positive limit switch is not sensed in the entire process.

The servo motor directly searches for the falling edge of the Z signal in the forward direction at high speed of H05-33. After reaching the falling edge of the Z signal, the motor changes to the reverse direction, and searches for the rising edge of the Z signal at low speed of –(H05-33). During reverse acceleration or reverse constant speed running, the motor stops immediately after reaching the rising edge of the Z signal.

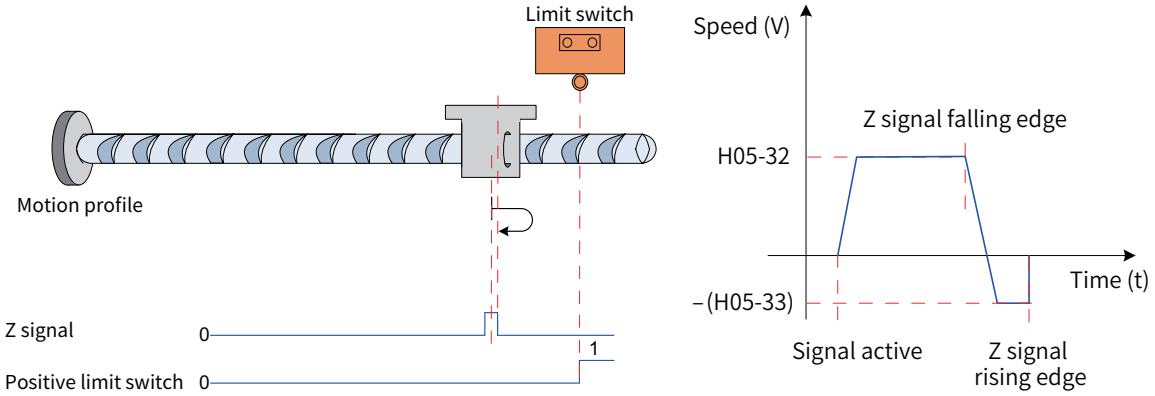

Figure 5-44 Motor running curve 2 and speeds in mode 2

③ The Z signal is inactive when the motor starts to run, and the positive limit switch is sensed in the process.

The servo motor searches for the Z signal in the forward direction at high speed of H05-32. After sensing the positive limit switch, the servo drive implements reverse homing (H05-40 set to 2 or 3) immediately or stops and wits for the homing signal re-sent by the host controller (H05-40 set to 0 or 1). After the condition is met, the servo drive searches for the Z signal in the reverse direction at high speed of –(H05-32). After reaching the rising edge of the Z signal, the servo motor decelerates and restores to the forward direction according to the time set in H05-34, and searches for the Z signal rising edge of the other side. During forward acceleration or forward constant speed running, the motor stops immediately after reaching the Z signal rising edge of the other side.

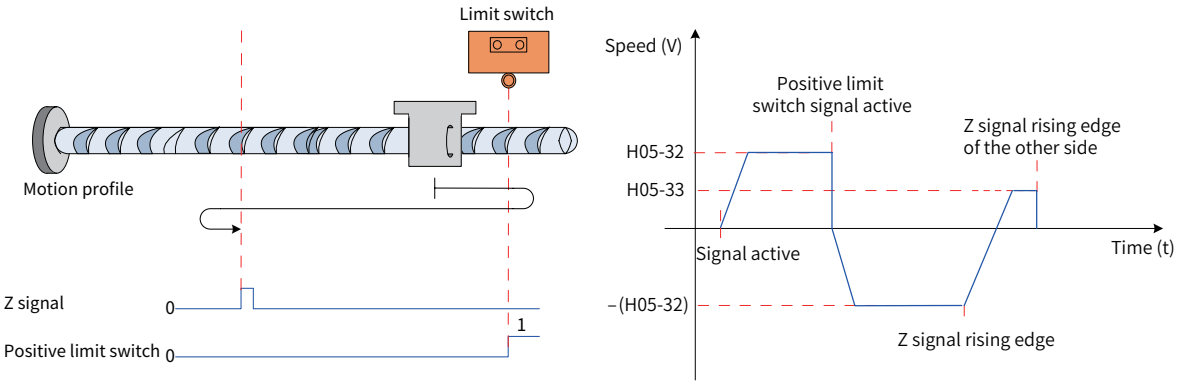

Figure 5-45 Motor running curve 3 and speeds in mode 2

3) H05-31 set to 4: Forward homing, deceleration point being home switch and home being motor Z signal

① The home switch signal is inactive (0: inactive; 1: active) when the motor starts to run, and the positive limit switch is not sensed in the entire process.

The servo motor searches for the home switch signal in the forward direction at high speed of H05-32. After reaching the rising edge of the home switch signal, the motor decelerates and changes to the reverse direction according to the time set in H05-34, and searches for the falling edge of the home switch signal at low speed of –(H05-33). After reaching the falling edge of the home switch signal, the motor decelerates and restores to the forward direction, and searches for the rising edge of the home switch signal at low speed of H05-33. After reaching the rising edge of the home switch signal, the motor continues to run and stops immediately after reaching the Z signal for the first time.

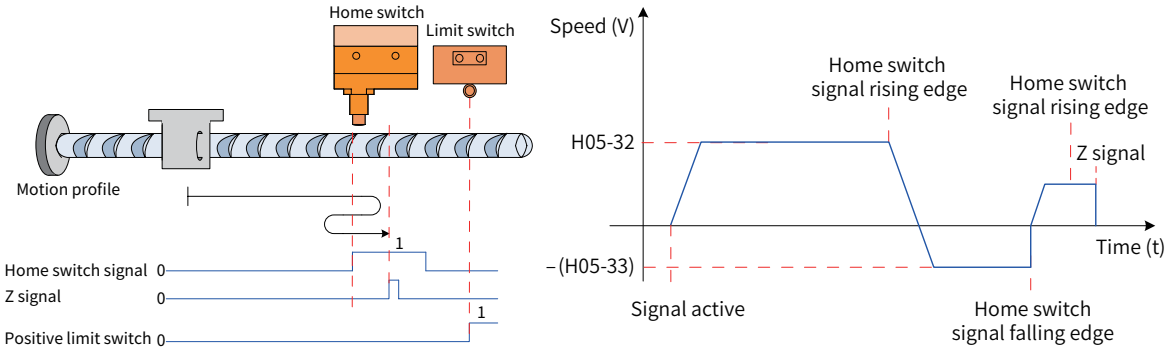

Figure 5-46 Motor running curve 1 and speeds in mode 4

② The home switch signal is active when the motor starts to run, and the positive limit switch is not sensed in the entire process.

The servo motor directly searches for the falling edge of the home switch signal in the reverse direction at low speed of –(H05-33). After reaching the falling edge of the home switch signal, the motor decelerates and restores to the forward direction, and searches for the rising edge of the home switch signal at low speed of H05-33. After reaching the rising edge of the home switch signal, the motor continues to run in the forward direction at low speed of H05-33, and stops immediately after reaching the rising edge of the Z signal for the first time.

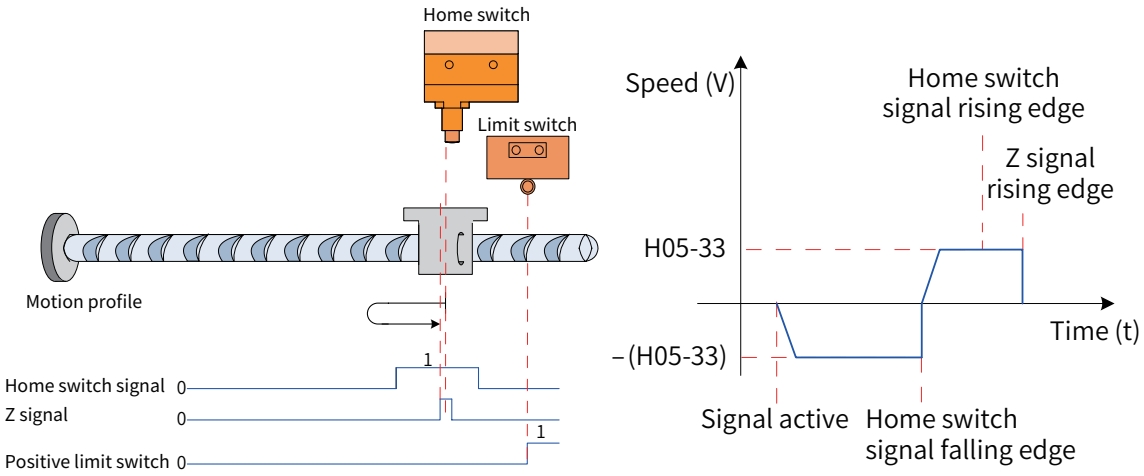

Figure 5-47 Motor running curve 2 and speeds in mode 4

③ The home switch signal is inactive when the motor starts to run, and the positive limit switch is sensed in the process.

The servo motor searches for the home switch signal in the forward direction at high speed of H05-32. After sensing the positive limit switch, the servo drive implements reverse homing (H05-40 set to 2 or 3) immediately or stops and waits for the homing signal re-sent by the host controller (H05-40 set to 0 or 1). After the condition is met, the motor searches for the deceleration point signal in the reverse direction at high speed of –(H05-32). After reaching the falling edge of the home switch signal, the motor decelerates and restores to the forward direction according to the time set in H05-34, and searches for the rising edge of the home switch signal at low speed of H05-33. After reaching the rising edge of the home switch signal, the motor continues to run and stops immediately after reaching the Z signal for the first time.

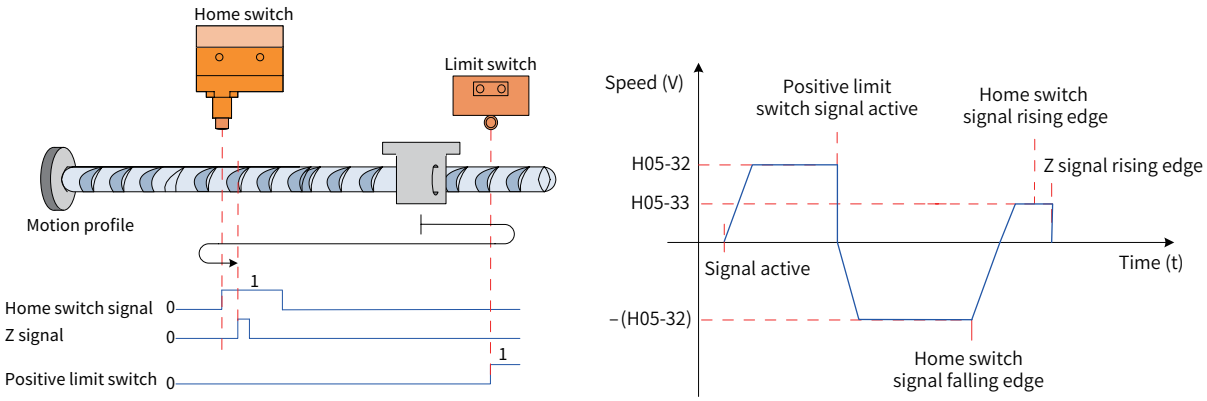

Figure 5-48 Motor running curve 3 and speeds in mode 4

4) H05-31 set to 6: Forward homing, deceleration point and home being positive limit switch

① The positive limit switch signal is inactive (0: inactive; 1: active) when the motor starts to run.

The servo motor searches for the positive limit switch signal in the forward direction at high speed of H05-32. After reaching the rising edge of the positive limit switch signal, the motor decelerates and changes to the reverse direction according to the time set in H05-34, and searches for the falling edge of the positive limit switch signal at low speed of –(H05-33). After reaching the falling edge of the positive limit switch signal, the motor decelerates and restores to the forward direction, and searches for the rising edge of the positive limit switch signal at low speed of H05-33. During forward acceleration or forward constant speed running, the motor tops immediately after reaching the rising edge of the positive limit switch signal.

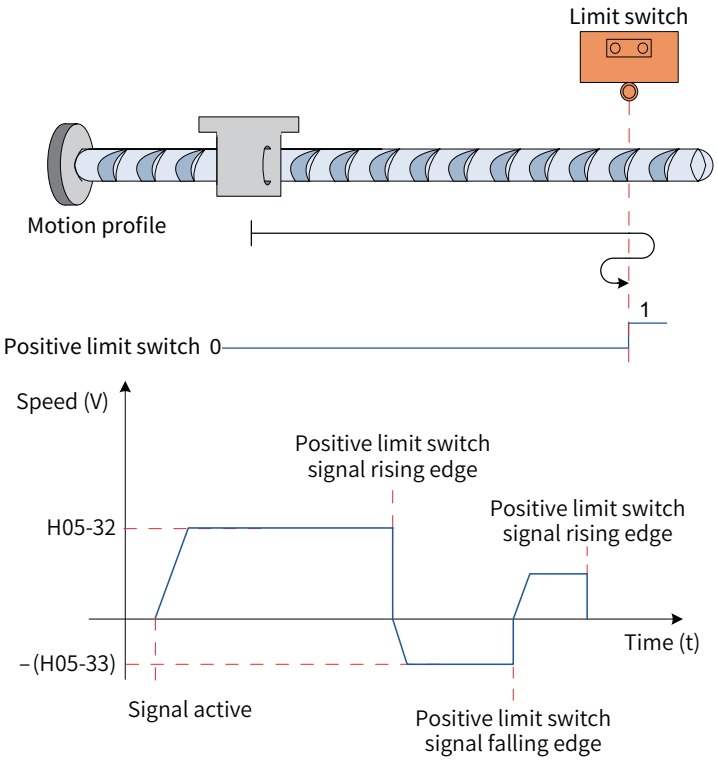

Figure 5-49 Motor running curve 1 and speeds in mode 6

② The positive limit switch signal is active when the motor starts to run.

The servo motor directly searches for the falling edge of the positive limit switch signal in the reverse direction at low speed of –(H05-33). After reaching the falling edge of the positive limit switch signal, the motor decelerates and changes to the forward direction, and searches for the rising edge of the positive limit switch signal at low speed of H05-33. During forward acceleration or forward constant speed running, the motor stops immediately after reaching the rising edge of the positive limit switch signal.

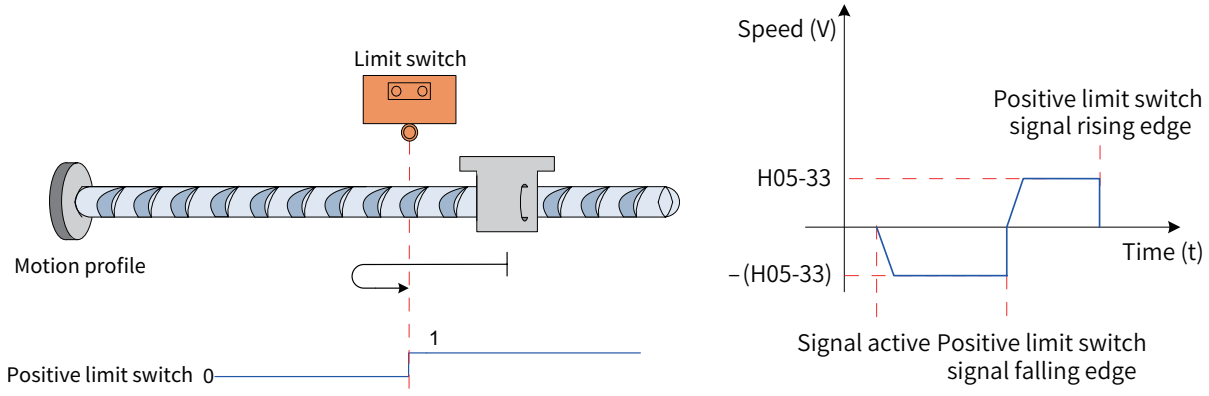

Figure 5-50 Motor running curve 2 and speeds in mode 6

5) H05-31 set to 8: Forward homing, deceleration point being positive limit switch and home being motor Z signal

① The positive limit switch signal is inactive (0: inactive; 1: active) when the motor starts to run.

The servo motor searches for the positive limit switch signal in the forward direction at high speed of H05-32. After reaching the rising edge of the positive limit switch signal, the motor decelerates and changes to the reverse direction according to the time set in H05-34, and searches for the falling edge of the positive limit switch signal at low speed of –(H05-33). After reaching the falling edge of the positive limit switch signal, the motor decelerates and restores to the forward direction, and searches for the rising edge of

the positive limit switch signal at low speed of H05-33. After reaching the rising edge of the positive limit switch signal, the motor continues to run and stops immediately after reaching the Z signal for the first time.

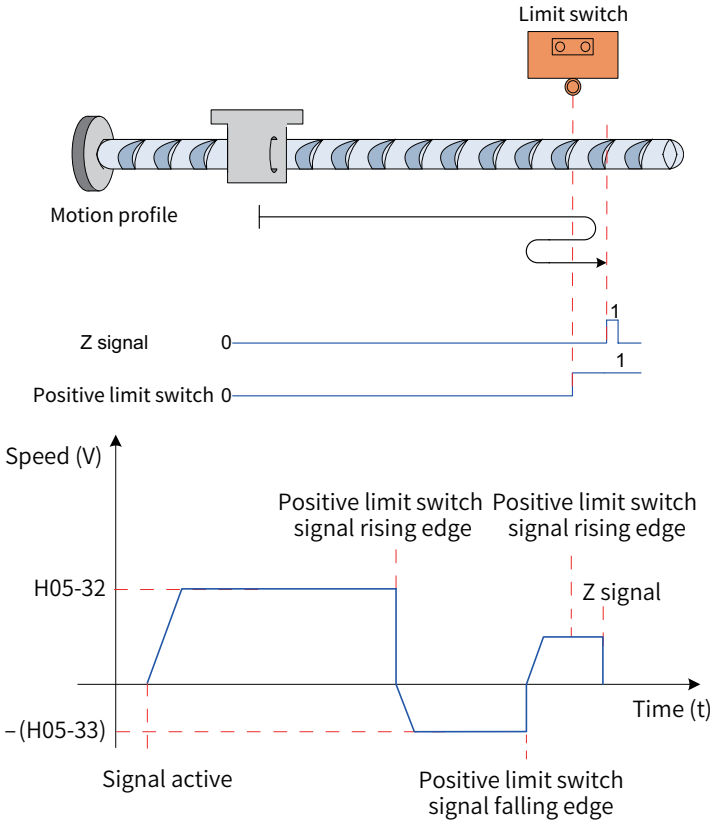

Figure 5-51 Motor running curve 1 and speeds in mode 8

② The positive limit switch signal is active when the motor starts to run.

The servo motor directly searches for the falling edge of the positive limit switch signal in the reverse direction at low speed of –(H05-33). After reaching the falling edge of the positive limit switch signal, the motor decelerates and restores to the forward direction, and searches for the rising edge of the positive limit switch signal at low speed of H05-33. After reaching the rising edge of the positive limit switch signal,

the motor continues to run in the forward direction at low speed of H05-33, and stops immediately after reaching the rising edge of the Z signal for the first time.

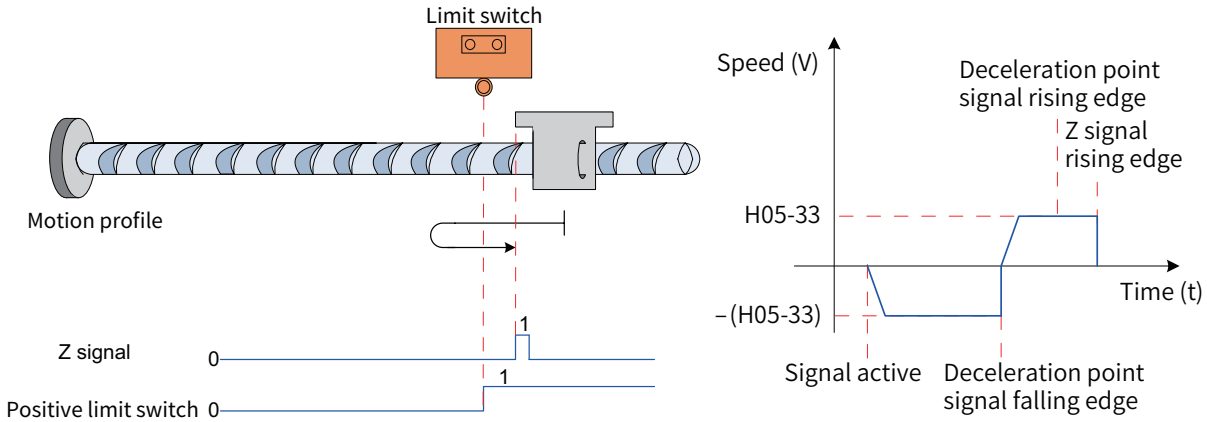

Figure 5-52 Motor running curve 2 and speeds in mode 8

6) H05-31 set to 10: Forward homing, deceleration point and home being forward mechanical final limit position

The servo motor runs in the forward direction at low speed of H05-33. After it reaches the mechanical final limit position, if the servo motor keeps the running state in which the torque reaches the limit set in H05-58 and the speed is lower than the value of H05-56 for a period of time, the servo drive judges that the mechanical final limit position is reached, and stops the motor immediately.

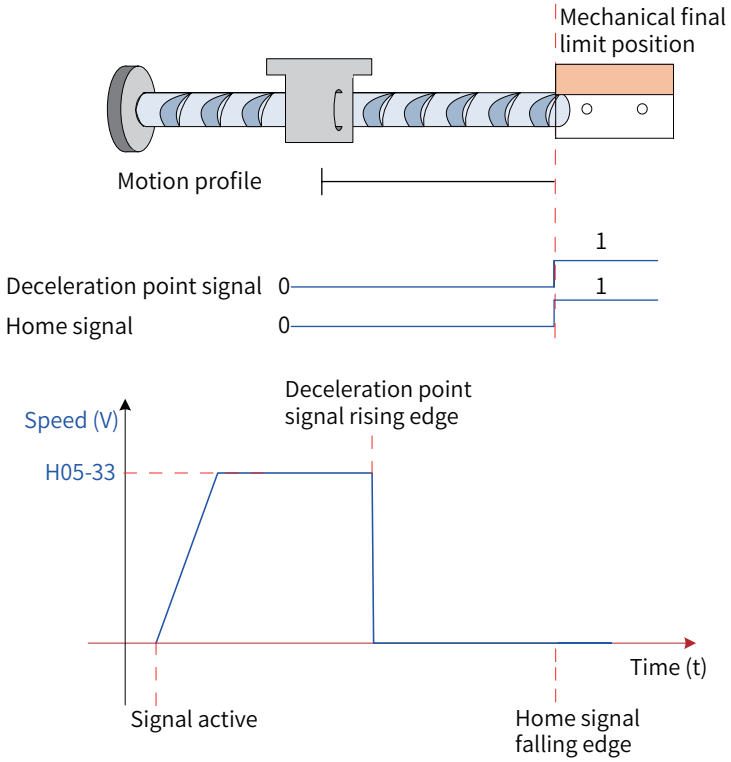

Figure 5-53 Motor running curve and speeds in mode 10

7) H05-31 set to 12: Forward homing, deceleration point being forward mechanical final limit position and home being motor Z signal

The servo motor runs in the forward direction at low speed of H05-33. After it reaches the mechanical final limit position, if the servo motor keeps the running state in which the torque reaches the limit set in

H05-58 and the speed is lower than the value of H05-56 for a period of time, the servo drive judges that the mechanical final limit position is reached. Then the servo motor runs in the reverse direction at speed of H05-33, and stops after reaching the Z signal rising edge for the first time.

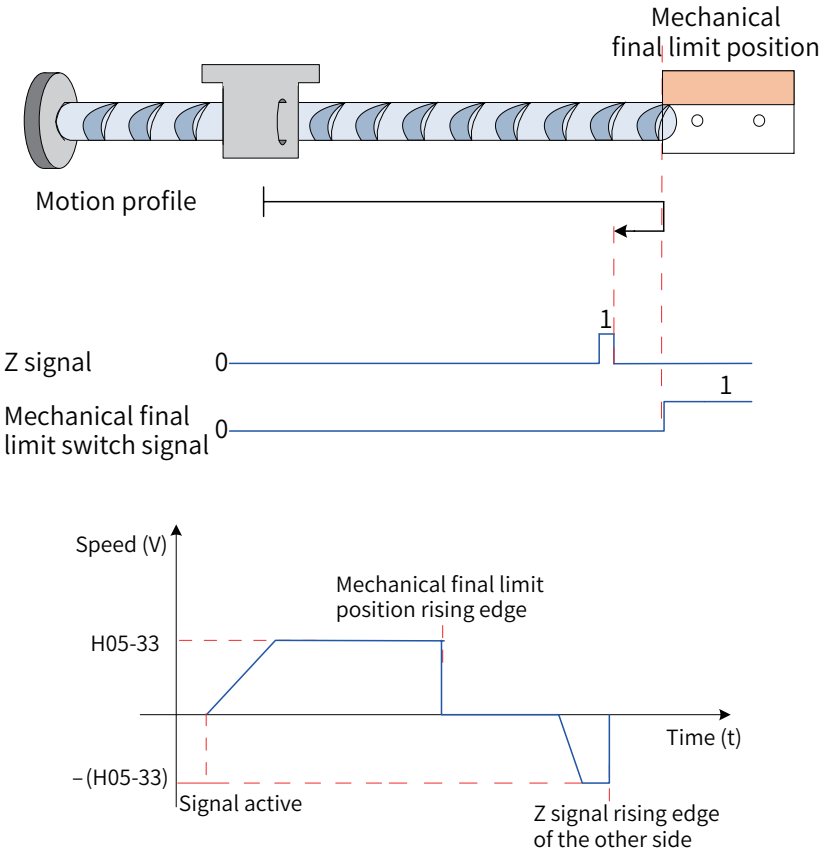

Figure 5-54 Motor running curve and speeds in mode 12

3 Electrical homing: Start electrical homing (H05-30 set to 5)

After homing is completed, the mechanical zero position of the servo system is obtained. H05-36 sets the distance for the servo motor to move from the current absolute position (H0B-07) to the specified position (H05-36). In the electrical homing mode, the servo motor keeps running at high speed of H05-32. The total motor displacement is determined by the difference between H05-36 and H0B-07. The running direction is determined by positive/negative of the total motor displacement. After the displacement reference is completed, the motor stops immediately.

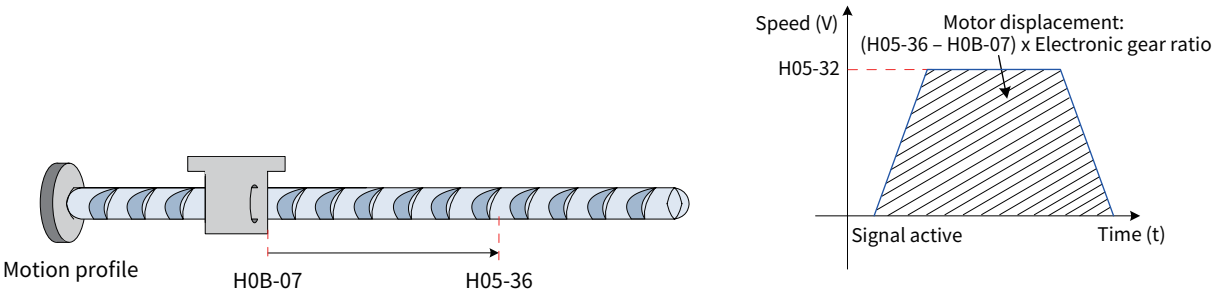

Figure 5-55 Motor running curve and speed of electrical homing

4 Mechanical Home and Mechanical Zero

The following table takes setting H05-30 to 0 as an example to describe the difference between mechani-

cal home and mechanical zero.

Table 5-19 Difference between mechanical home and mechanical zero

Mechanical Home Different from Mechanical Zero	Mechanical Home Same as Mechanical Zero
If home offset is set (H05-36 set to a non-zero value) and the mechanical home is different from the mechanical zero (H05-40 set to 0 or 2), the motor stops immediately after reaching the rising edge of the home signal during forward acceleration or forward constant speed running, and the motor absolute position (H0B-07) is forced to the value of H05-36.	If home offset is set (H05-36 set to a non-zero value) and the mechanical home is the same as the mechanical zero (H05-40 set to 1 or 3), the motor continues to run after reaching the rising edge of the home signal during forward acceleration or forward constant speed running until the motor absolute position (H0B-07) equals to the value of H05-36.
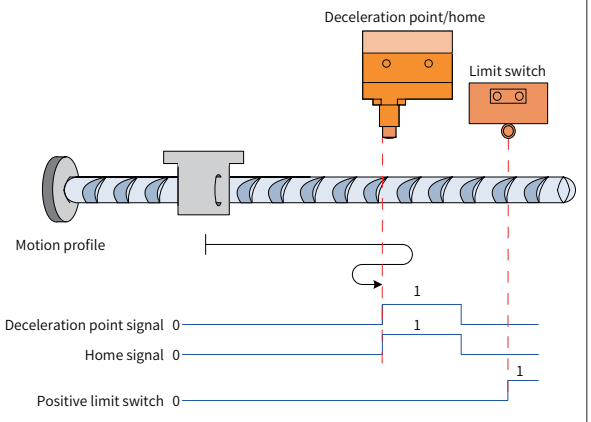	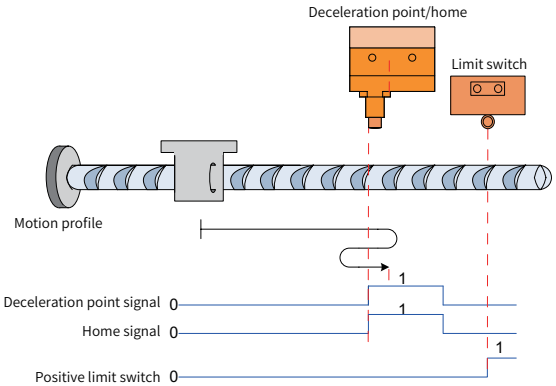
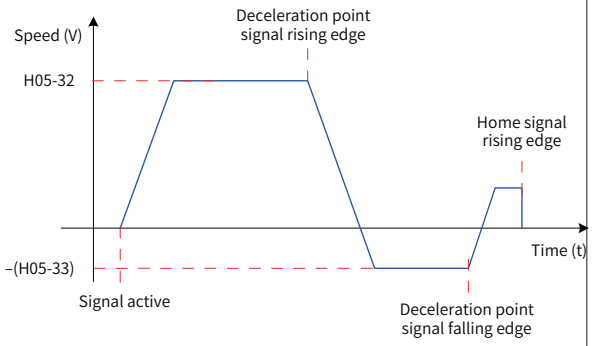	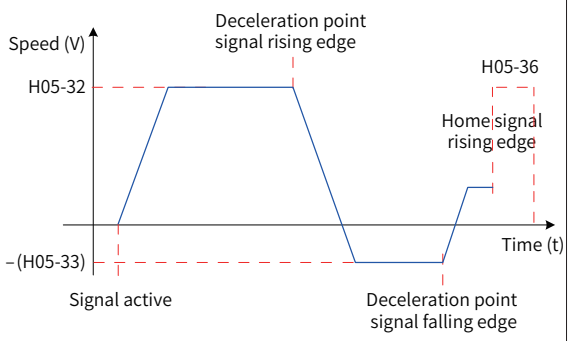

The positive/negative final limit switch does not affect the homing modes 10 to 13.

5 Setting parameters

1) Setting the homing mode

☆ Related parameters:

Para.	Name	Value Range	Function	Setting Condition	Effective Time	Default
H05-30	Homing selection	0: Disabled 1: Homing enabled through HomingStart signal input from DI 2: Electrical homing enabled through HomingStart signal input from DI 3: Homing started immediately upon power-on 4: Homing started immediately 5: Electrical homing started 6: Current position as the home	Defines the homing mode and the trigger signal source.	During operation	Immediately	0
H05-31	Homing mode	0: Forward homing, deceleration point and home being positive limit switch 1: Reverse homing, deceleration point and home being home switch 2: Forward homing, deceleration point and home being motor Z signal 3: Reverse homing, deceleration point and home being motor Z signal 4: Forward homing, deceleration point being home switch and home being motor Z signal 5: Reverse homing, deceleration point being home switch and home being moor Z signal 6: Forward homing, deceleration point and home being positive limit switch 7: Reverse homing, deceleration point and home being negative limit switch 8: Forward homing, deceleration point being positive limit switch and home being motor Z signal 9: Reverse homing, deceleration point being negative limit switch and home being motor Z signal 10: Forward homing, deceleration point and home being mechanical final limit position 11: Reverse homing, deceleration point and home being mechanical final limit position 12: Forward homing, deceleration point being mechanical final limit position and home being motor Z signal 13: Reverse homing, deceleration point being mechanical final limit position and home being motor Z signal	Sets the homing direction, deceleration point, and home during homing.	At stop	Immediately	0

Para.	Name	Value Range	Function	Setting Condition	Effective Time	Default
H05-36	Offset of mechanical home	–1073741824 to +1073741824	When H05-31 is set to 10, 11, or 12, the mode 10 or 12 is invalid when H05-36 is set to a value greater than 0. The mode 11 or 13 is invalid when H05-36 is set to a value smaller than 0.	At stop	Immediately	0
H05-40	Mechanical home offset and action upon active limit signal	0: H05-36 as the coordinate after homing, reverse homing applied after homing triggered again upon active limit signal 1: H05-36 as the relative offset after homing, reverse homing applied after homing triggered again upon active limit signal 2: H05-36 as the coordinate after homing, reverse homing applied automatically upon active limit signal 3: H05-36 as the relative offset after homing, reverse homing applied automatically upon active limit signal	Defines whether to offset the mechanical home during homing, whether the motor needs to move additional distance after homing, and the action upon active limit signal.	At stop	Immediately	0

6 Setting the homing running curve

If the home switch signal is switched on after the deceleration signal becomes active but deceleration is insufficient, the positioning may be inaccurate. Fully consider the displacement required for deceleration when setting the deceleration point and home signal input position. The acceleration/deceleration time during homing (H05-34) also affects the positioning accuracy. Take this parameter into consideration during displacement setting.

☆ Related parameters:

Para.	Name	Value Range	Unit	Function	Setting Condition	Effective Time	Default
H05-32	Speed of high-speed homing	0 to 3000	RPM	Sets the high speed value of searching for the deceleration point signal during homing. During electrical homing, the motor runs always at high speed of H05-32.	At stop	Immediately	100
H05-33	Speed of low-speed homing	0 to 1000	RPM	Sets the low speed value of searching for the deceleration point signal during homing. The value must be low enough to prevent mechanical impact at stop.	At stop	Immediately	10
H05-34	Acceleration/ Deceleration time during homing	0 to 1000	ms	Sets the time for the motor speed to change from 0 RPM to 1000 RPM during homing.	At stop	Immediately	1000
H05-35	Duration limit of homing	0 to 65535	ms	Sets the time limit of homing. If the time expires, ER.601 (Homing timeout) will occur.	At stop	Immediately	10000
H05-36	Offset of mechanical home	–1073741824 to +1073741824	Reference unit	Defines the absolute position value (H0B-07) of the motor after homing.	At stop	Immediately	0

☆ Related function No.:

<table>
<tr><th>Function No.</th><th>Name</th><th>Function Name</th><th>Function</th></tr>
<tr><td>FunIN.31</td><td>HomeSwitch</td><td>Home switch</td><td>Valid: Current position as home
<table>
<tr><th>Logic of DI with HomeSwitch</th><th>Actual Valid Level</th></tr>
<tr><td>0 (Low level)</td><td>Low level</td></tr>
<tr><td>1 (High level)</td><td>High level</td></tr>
<tr><td>3 (Rising edge)</td><td>High level</td></tr>
<tr><td>4 (Falling edge)</td><td>Low level</td></tr>
<tr><td>5 (Edge valid)</td><td>Low level</td></tr>
</table>
Set the logic of the DI terminal assigned with this function to active high or active low according to the output of the host controller.</td></tr>
<tr><td>FunIN.32</td><td>HomingStart</td><td>Homing enable</td><td>Valid: Enabled. The function cannot be enabled repeatedly during homing.
Invalid: Disabled</td></tr>
<tr><td>FunOut.16</td><td>HomeAttain</td><td>Homing completed</td><td>Valid: Homing completed in the position control mode
Invalid: Homing not completed</td></tr>
</table>

FunOut.17	ElecHomeAttain	Electrical homing completed	Valid: Electrical homing completed in the position control mode Invalid: Electrical homing not completed

7 Working time sequence:

■ H05-30 set to 1 or 2

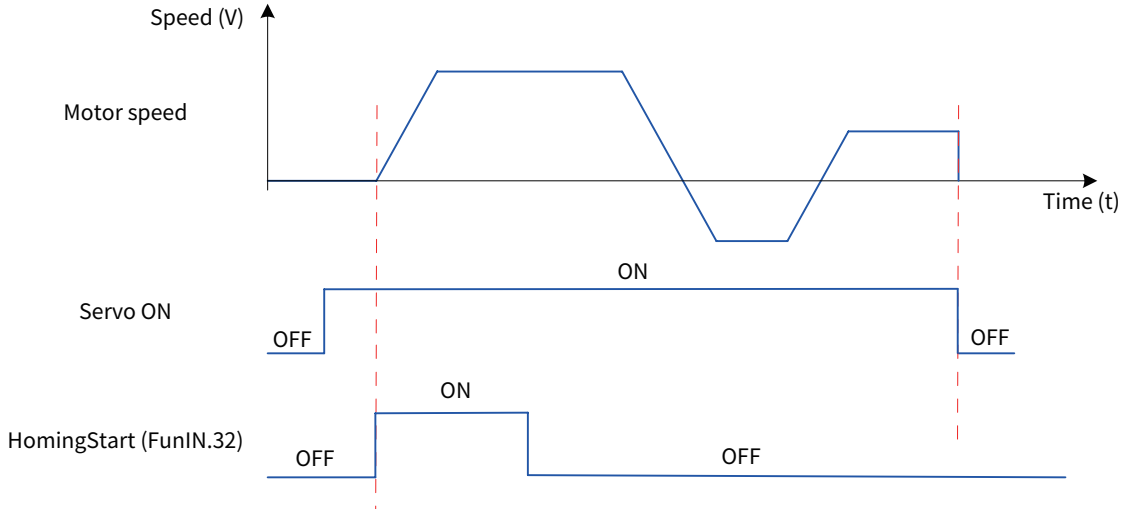

Figure 5-56 Example of time sequence diagram

① Switch on the S-ON signal and then the HomingStart signal.

② During the homing operation, the S-ON signal remains active and the HomingStart signal change is shielded.

③ During the homing operation, the servo motor stops if the S-ON signal is switched off. To enable the homing function again, switch on the S-ON signal and then the HomingStart signal.

④ If Er.601 occurs, the servo motor stops, and the S-ON signal remains active. After the Homing-Start signal is switched on again, Er.601 is reset and homing is performed again.

⑤ The homing operation can be triggered repeatedly.

1) H05-30 set to 3

■ The homing operation is performed only when the S-ON signal is switched on for the first time after power-on.

■ If Er.601 occurs, the servo motor stops. Er.601 can be reset after the S-ON signal is switched off.

■ The homing operation cannot be triggered repeatedly.

2) H05-30 set to 4 or 5

■ The homing operation is performed immediately when the S-ON signal is switched on after pow-er-on.

■ During the homing operation, the servo motor stops if the S-ON signal is switched off. To enable the homing function again, switch on the S-ON signal again.

■ When Er.601 occurs, H05-30 becomes 0 and the servo motor stops. Er.601 can be reset after the S-ON signal is switched off. To enable the homing function again, set H05-30 again. After homing is com-pleted, H05-30 becomes 0. To enable the homing function again, set H05-30 again.

3) H05-30 set to 6

■ When the current position is used as the home and home offset (H05-40 set to 0 or 2 and H05-36 set to a non-zero value) is required, set H05-36 and H05-40 first, and then set H05-30 to 6. Otherwise, H0B-07 is the value before H05-36 is modified.

■ After the homing operation is completed, H05-30 becomes 0. To enable the homing function again,

re-set H05-36 and set H05-30 to 6.

5.2.9 Function Code Block Diagram of Position Control Mode

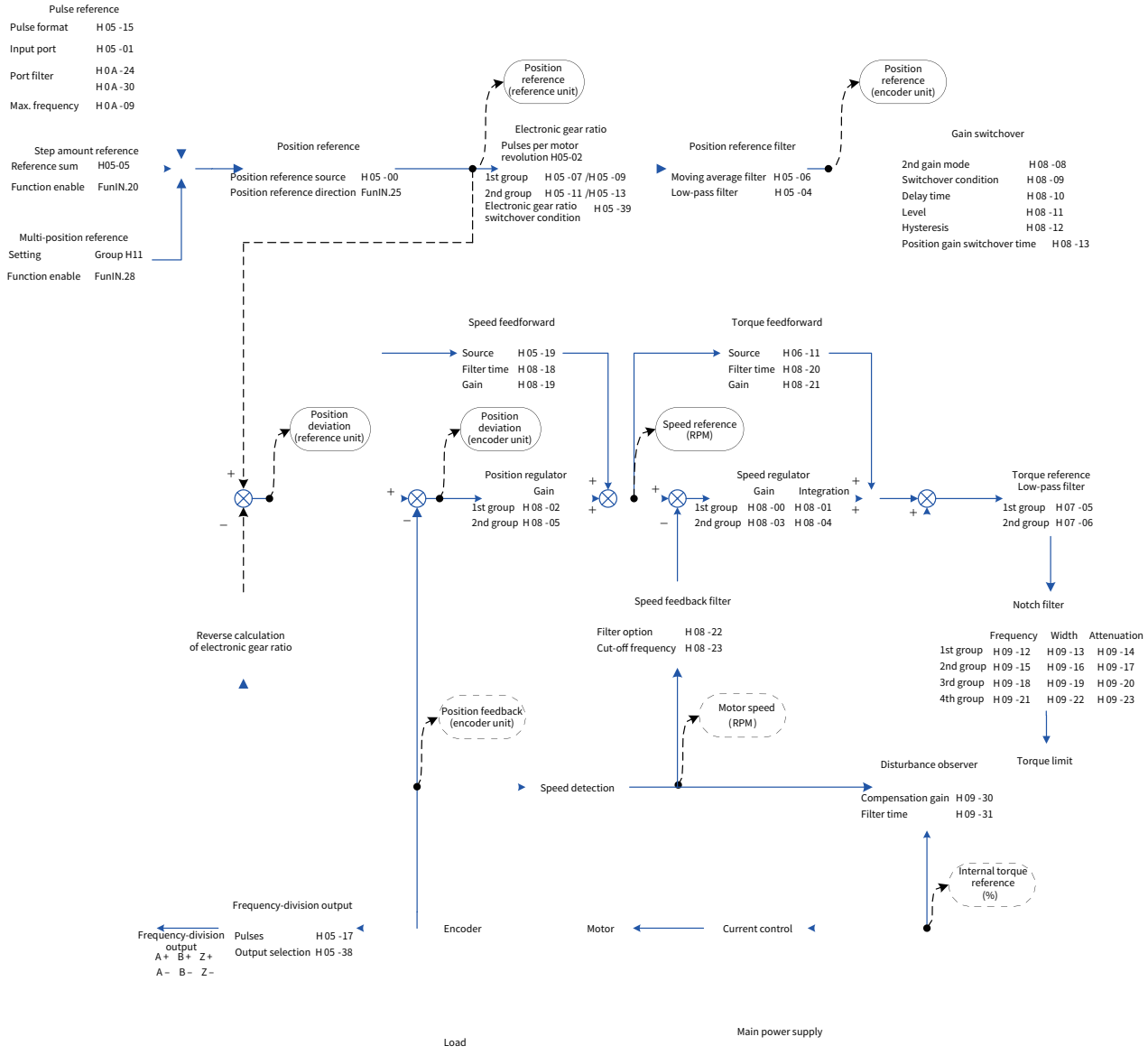

5.3 Speed Control Mode

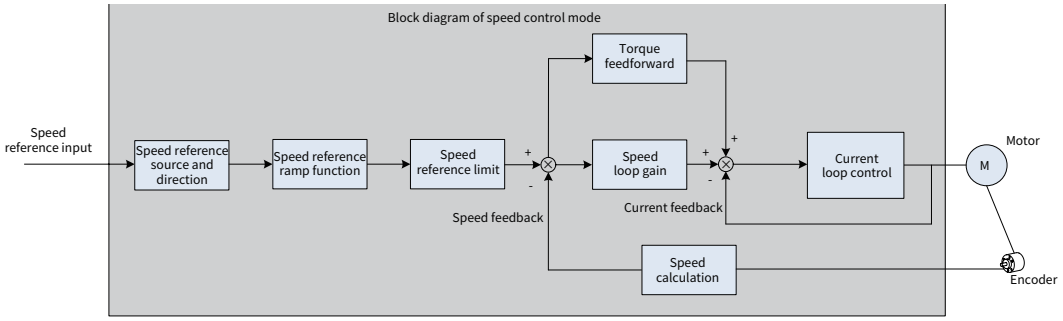

Figure 5-57 Block diagram of speed control

Set H02-00 to 0 on the operating panel or Inovance software tool to enable the speed control mode.

Set the servo drive parameters based on the mechanical structure and specifications. The following sec-

tion uses the basic parameter setting to describe the speed control mode.

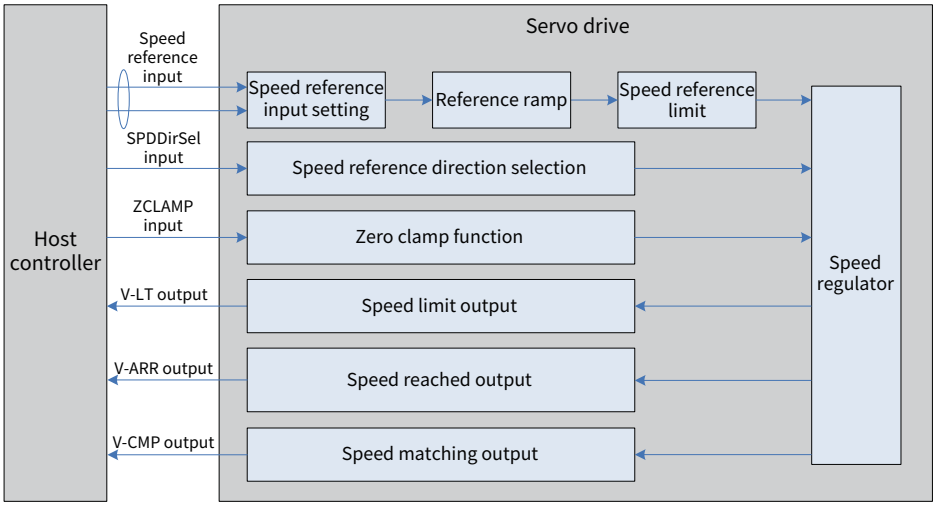

Figure 5-58 Signal exchange between the servo drive and the host controller

5.3.1 Speed Reference Input Setting

1 Speed reference source

In the speed control mode, five methods of obtaining speed references are available and you can select one in H06-02.

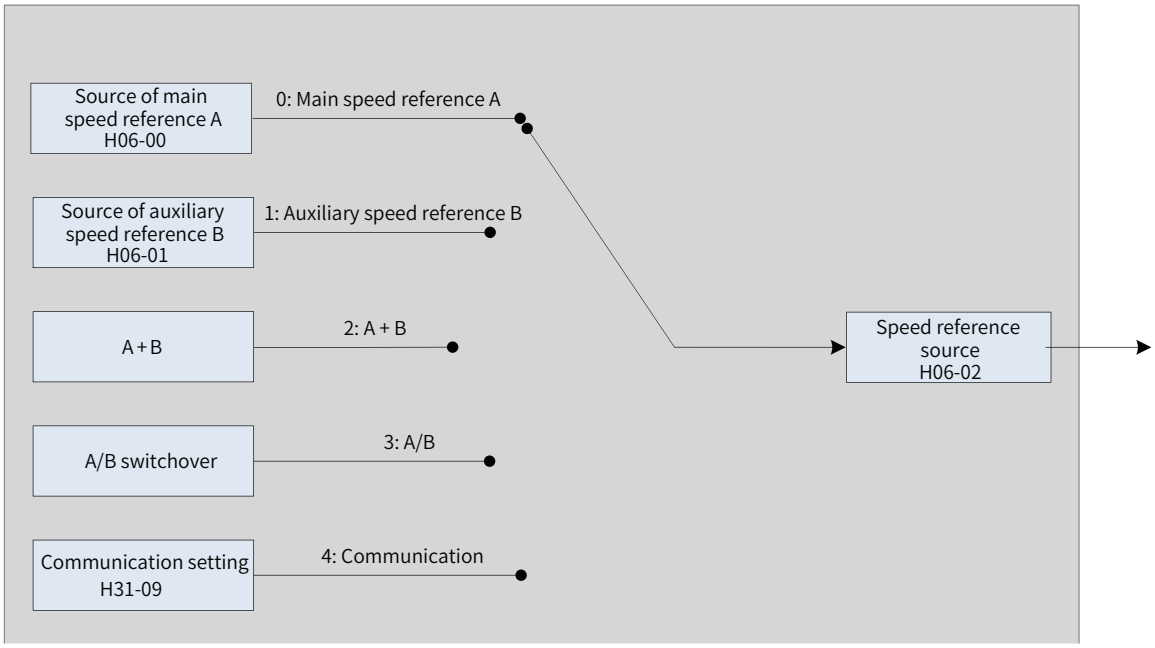

Figure 5-59 Speed reference source selection

☆ Related parameters:

Para.	Name	Value Range	Unit	Function	Setting Condition	Effective Time	Default

H06-02	Speed reference source	0: Source of main speed reference A 1: Source of auxiliary speed reference B 2: A + B 3: A/B switchover 4: Communication	-	Defines the speed reference source.	At stop	Immediately	0

1) Source of main speed reference A

The sources of main speed reference A include digital setting and analog voltage setting. Digital setting produces internal speed references, and analog voltage setting produces external speed references.

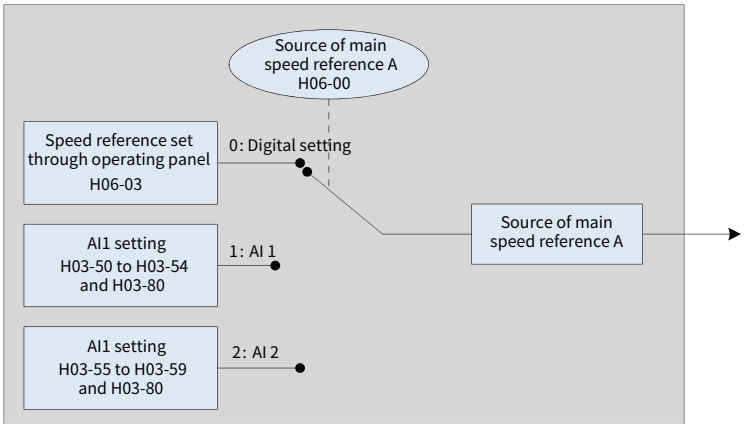

Figure 5-60 Source of main speed reference A

☆ Related parameters:

Para.	Name	Value Range	Unit	Function	Setting Condition	Effective Time	Default
H06-00	Source of main speed reference A	0: Digital setting (H06-03) 1: AI1 2: AI2	-	Defines the source of main speed reference A.	At stop	Immediately	0

1) Digital setting

The speed reference is set in H06-03.

☆ Related parameters:

Para.	Name	Value Range	Unit	Function	Setting Condition	Effective Time	Default
H06-03	Speed reference value set through keypad	–6000 to +6000	RPM	Sets the value of the internal speed reference, in the unit of 1 RPM.	During operation	Immediately	200

2) Analog voltage setting

The analog voltage signal output by the host controller or other devices is processed and then used as the speed reference.

■ Analog voltage input terminal

The servo drive provides two analog input channels: AI1 and AI2, of which the maximum input voltage is ±10 VDC and input impedance is about 9 kΩ.

Analog input circuit:

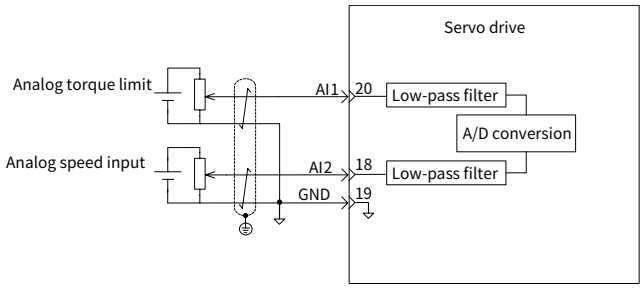

■ Operation method:

The following figure takes AI2 as an example to describe the analog voltage setting of the speed reference.

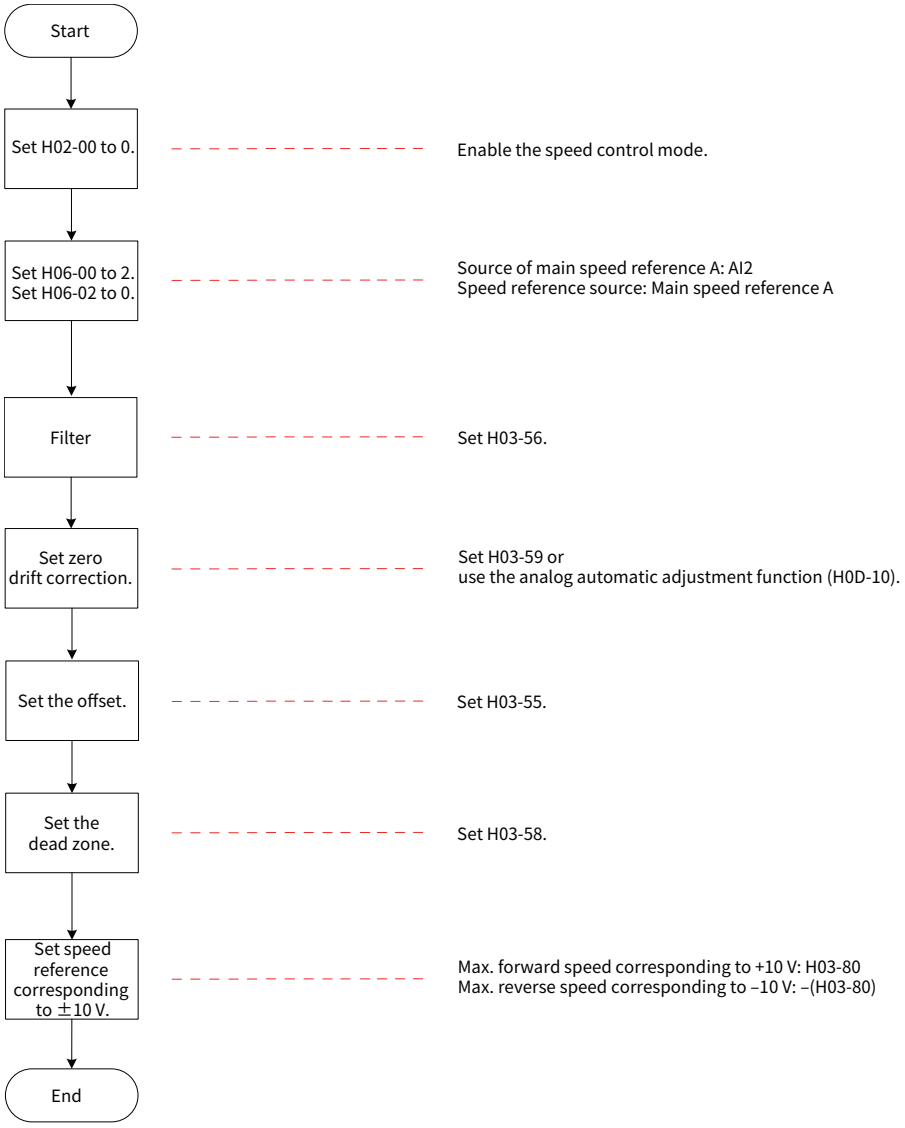

Figure 5-61 Flowchart of setting speed reference by analog voltage

★ Terms:

Zero drift indicates the value of the drive sampling voltage relative to GND upon zero AI voltage.

Offset indicates the input voltage value of the analog channel when the sampling voltage is zero after zero drift correction.

Dead zone indicates the input voltage range of the analog channel when the sampling voltage is zero.

In Figure 6-65, y_1 is the output voltage of the analog channel not processed, and y_6 is the final speed reference.

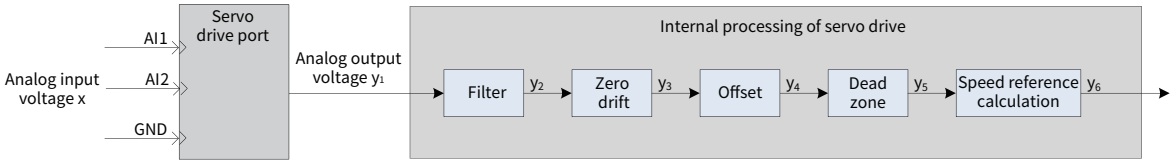

Figure 5-62 AI processing of servo drive

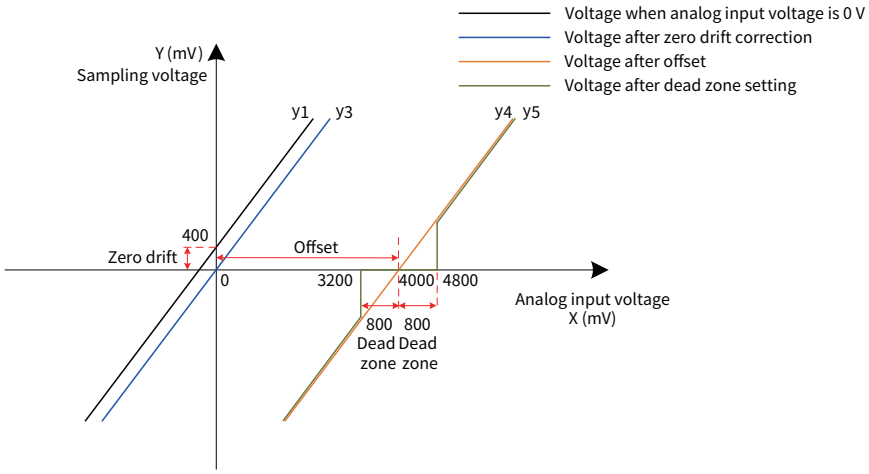

Figure 5-63 Example of sampling voltage and AI processing of servo drive

■ Filter:

The servo drive provides the analog channel filter function. Setting the filter time constant in H03-56 prevents motor reference fluctuation due to instable analog input voltage and eliminates motor malfunction due to signal interference. The filter function cannot eliminate or suppress the zero drift or dead zone.

■ Zero drift correction:

It corrects the analog output voltage offset relative to the output for the actual input voltage 0 V.

In the preceding figure, y_1 is the output voltage of the analog channel not processed. Take the filter time constant setting to 0.00 ms as an example, the sampling voltage after filter y_2 is same as y_1.

When the actual input voltage x is 0, the output voltage y_1 is 400 mV. Therefore, the zero drift voltage is 400 mV.

Set H03-59 to 400.0 (mV). The sampling voltage after zero drift correction is shown as y_3. $y_3 = y_1 - 400.0$

Zero drift correction can also be performed by using the analog automatic adjustment function in H0D-10.

■ Offset setting:

It sets the actual input voltage corresponding to sampling voltage 0.

Assume that the actual input voltage is 4000 mV when the sampling voltage y_4 is 0. That is, the offset is 4000 mV.

Set H03-55 to 4000 (mV). The sampling voltage after offset $y_4 = x - 4000 = y_3 - 4000$

■ Dead zone correction:

It sets the valid input voltage range when the sampling voltage of the servo drive is not 0.

After the offset is set, if the sampling voltage is always 0 when the input voltage x is within the range of 3200 mV to 4800 mV, the dead zone is 800 mV.

Set H03-58 to 800.0 (mV). The sampling voltage after dead zone correction is shown as y_5.

$$y_5 = \begin{cases} 0 & 3200 \leqslant x \leqslant 4800 \\ y_4 & 4800 < x \leqslant +10000 \text{ or } -10000 \leqslant x < 32 \end{cases}$$

■ Speed reference calculation:

After setting the zero drift, offset, and dead zone, set the speed reference corresponding to 10 V (10,000 mV) in H03-80 to obtain the actual speed reference y_6:

$$y_6 = \frac{y_5}{10000} \times (\text{H 03-80})$$

The value is used as the speed reference set through analog in the speed control mode.

The following figures show the relationship between analog input and speed values respectively when the offset is absent and present. After all settings are made correctly, view the sampling voltage of AI2 in H0B-22 or the speed reference corresponding to analog input in H0B-01.

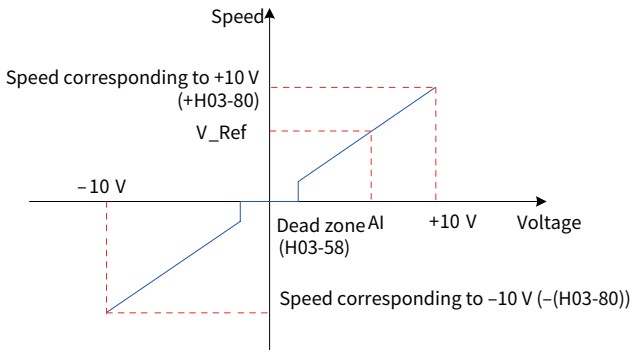

Figure 5-64 No-offset AI

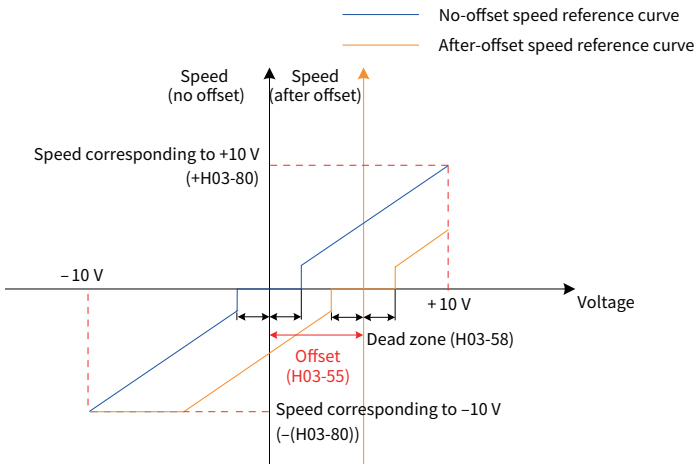

Figure 5-65 After-offset AI

The relationship between the final speed reference y_6 and the input voltage x is:

$$y_6 = \begin{cases} 0 & B - C \leqslant x \leqslant B + C \\ x\text{-}B & B + C < x \leqslant +10000 \text{ or } -10000 \leqslant x < B - C \end{cases}$$

Where, B: offset; C: dead zone

☆ Related parameters:

Para.	Name	Value Range	Unit	Function	Setting Condition	Effective Time	Default
H03-55	AI2 offset	–5000 to +5000	mV	Sets the offset of the analog channel AI2.	During operation	Immediately	0
H03-56	AI2 input filter time constant	0 to 655.35	ms	Sets the moving average filter time constant of the analog channel AI2.	During operation	Immediately	2.00
H03-58	AI2 dead zone	0 to 1000.0	mV	Sets the dead zone of the analog channel AI2.	During operation	Immediately	10.0
H03-59	AI2 zero drift	–500.0 to +500.0	mV	Sets the zero drift of the analog channel AI2.	During operation	Immediately	0.0
H03-80	Speed corresponding to analog 10 V	0 to 6000	RPM	Sets the speed corresponding to analog 10 V.	At stop	Immediately	3000
H0D-10	Analog channel automatic adjustment	0: No operation 1: AI1 adjustment 2: AI2 adjustment	-	Defines whether to enable automatic zero drift correct of AI1 and AI2.	At stop	Immediately	0

The setting method of AI1 is the same as that of AI2 described above. For detailed parameter descriptions, see descriptions of parameters *H03-50 to H03-59* in Chapter 8.

3) Source of auxiliary speed reference B

The sources of auxiliary speed reference B include digital setting, analog voltage setting, and multi-speed references. Digital setting and multi-speed references produce internal speed references, and analog voltage setting produces external speed references.

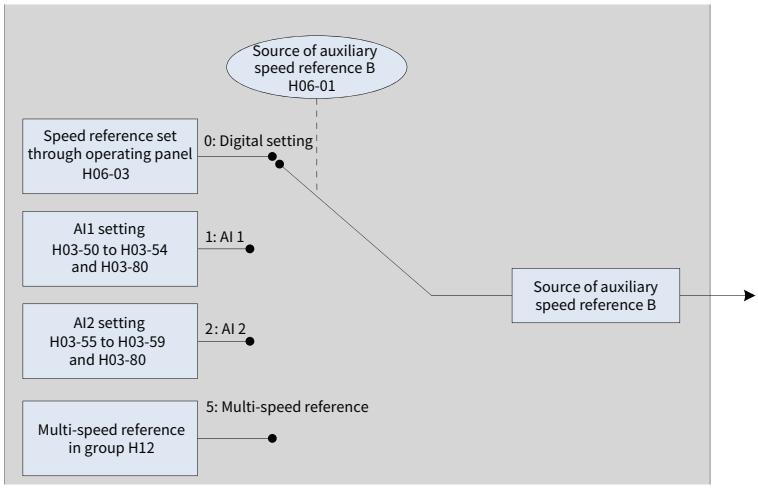

Figure 5-66 Source of auxiliary speed reference B

☆ Related parameters:

Para.	Name	Value Range	Unit	Function	Setting Condition	Effective Time	Default
H06-01	Source of auxiliary speed reference B	0: Digital setting (H06-03) 1: AI1 2: AI2 3: 0 (invalid) 4: 0 (invalid) 5: Multi-speed reference	-	Defines the source of auxiliary speed reference B.	At stop	Immediately	1

Digital setting and analog voltage setting are the same as those of sources of main speed reference A. The following part describes how to set auxiliary speed reference B through multi-speed reference.

The servo drive supports multi-speed running. It stores 16 speed references. The maximum running speed and running time of each speed reference can be set separately. Four groups of acceleration/deceleration time are available. The setting flowchart is shown in the following figure.

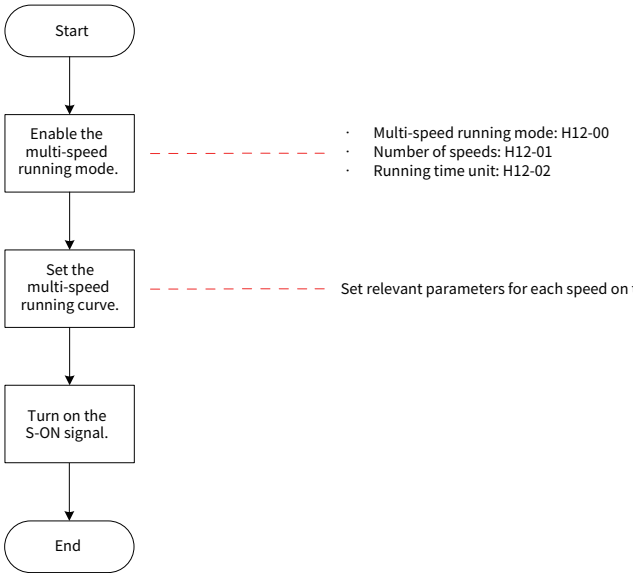

Figure 5-67 Multi-speed reference setting flowchart

1) Setting the multi-speed running mode

☆ Related parameters:

Para.	Name	Value Range	Unit	Function	Setting Condition	Effective Time	Default
H12-00	Multi-speed running mode	0: Stop after running for one cycle (number of speeds selectable through H12-01) 1: Cyclic operation (number of speeds selectable through H12-01) 2: Switchover through external DI	-	Specifies the multi-speed reference running mode.	At stop	Immediately	1

Para.	Name	Value Range	Unit	Function	Setting Condition	Effective Time	Default
H12-01	Number of speeds	1 to 16	-	Defines the total number of speed references.	At stop	Immediately	1
H12-02	Running time unit	0: s 1: min		Specifies the tome unit of multi-speed reference running.	During operation	Immediately	1

Assign an external DI with FunIN.5 (DIR-SEL) to select the multi-speed running direction.

☆ Related function code:

Function No.	Name	Function Name	Function
FunIN.5	DIR-SEL	Multi-reference direction	Inactive: Reference direction by default Active: Opposite to the reference direction

The following part takes H12-01 being set to 2 as an example to describe each running mode.

■ Stop after running for one cycle (H12-00 set to 0)

Set H12-00 to 0 to select the running mode of stop after running for one cycle. Set H12-01 and H12-02 based on the total number of speeds and running time unit, and set each speed reference, running time, and acceleration/deceleration time. The servo drive runs from speed 1 to speed N and stops after completing the end speed.

Table 6-24 Description of stop after running for one cycle

Mode Description	Running Curve
◆ The servo drive stops after running for one cycle. ◆ The drive automatically switches to the next speed.	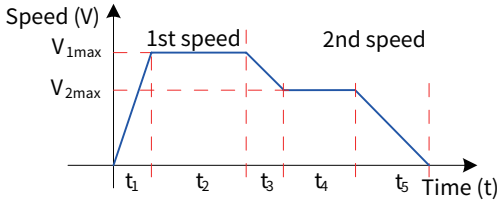 ◆ V_{1max} and V_{2max}: reference values of speed 1 and speed 2 ◆ t_1: actual acceleration/deceleration time of speed 1 ◆ t_3 and t_5: actual acceleration/deceleration time of speed 2 Running time of a certain speed = Time taken in switching from the last speed to current speed + Duration of constant-speed operation at current speed (For example, the running time of speed 1 is the sum of $t_1 + t_2$; the running time of speed 2 is the sum of $t_3 + t_4$). Do not set the running time of a certain speed to 0. Otherwise, the drive skips this speed and switches to the next speed directly. When the actual motor speed reaches the maximum running speed, the speed reached signal becomes active. If the S-ON signal is switched off during running of a certain speed, the motor stops according to the stop mode set in H02-05.

★ Terms:

One-cycle running means that the servo drive completes running the total number of speeds set in H12-01.

■ Cyclic operation (H12-00 set to 1)

Set H12-00 to 1 to select the cyclic operation mode. Set H12-01 and H12-02 based on the total number of speeds and running time unit, and set each speed reference, running time, and acceleration/deceleration time. The servo drive runs from speed 1 to speed N and automatically starts from speed 1 again after completing one cycle

Table 5-20 Description of cyclic operation

Mode Description	Running Curve
◆ The drive starts from speed 1 after each cycle of operation. ◆ The drive automatically switches to the next speed. ◆ The cyclic operation state remains active as long as the S-ON signal is active.	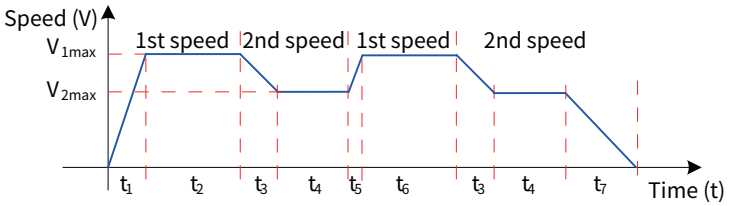 ◆ V_{1max} and V_{2max}: maximum values of speed 1 and speed 2 ◆ Running time = Time taken in switching from the last speed to current speed + Duration of constant-speed operation at current speed (For example, the running time of speed 1 is the sum of $t_1 + t_2$; the running time of speed 2 is the sum of $t_3 + t_4$). ◆ Do not set the running time of a certain speed to 0. Otherwise, the drive skips this speed and switches to the next speed directly. ◆ When the actual motor speed reaches the maximum running speed, the speed reached signal becomes active. ◆ If the S-ON signal is switched off during running of a certain speed, the motor stops according to the stop mode set in H02-05.

■ DI switchover (H12-00 set to 2)

Set H12-00 to 2 to select the DI switchover running mode. Set H12-01 and H12-02 based on the total number of speeds and running time unit, and set each speed reference, running time, and acceleration/deceleration time. The servo drive selects the speed No. based on the state combinations of the external DI terminals (CMDx).

Table 5-21 Description of DI switchover

Mode Description	Running Curve
◆ The drive continues operating when the displacement No. is updated. ◆ The speed No. is determined by the DI logic. ◆ The interval time between displacements is determined by the command delay of the host controller. ◆ The multi-position reference is edge-triggered.	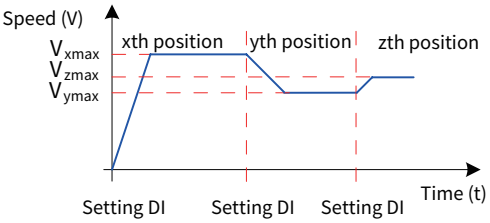 x and y: speed No. (The relationship between the speed No. and the DI logic is described below.) If the speed No. determined by the DI does not change, the servo drive continues running at this speed, without being affected by the running time. When the actual motor speed reaches the maximum running speed, the speed reached signal becomes active. If the S-ON signal is switched off during running of a certain speed, the motor stops according to the stop mode set in H02-05.

When the multi-speed running mode is DI switchover, assign four DI terminals with functions 6 to 9 (FunIN.6 to FunIN.9, multi-reference switchover) and determine the activation logic of the DI terminals. In

addition, assign a DI terminal with function 5 (FunIN.5: DIR-SEL, multi-speed reference direction switchover by DI) for switching the speed reference direction

☆ Related function code:

<table>
<tr><th>Function No.</th><th>Name</th><th>Function Name</th><th>Function</th></tr>
<tr><td>FunIN.5</td><td>DIR-SEL</td><td>Multi-speed reference direction switchover by DI</td><td>Used to switch over the speed reference direction in multi-speed DI switchover mode.
Inactive: Default reference direction
Active: Opposite to the reference direction</td></tr>
<tr><td>FunIN.6</td><td>CMD1</td><td>Multi-reference switchover 1</td><td rowspan="4">The speed No. is a 4-bit binary value. The relationship between CMD1 to CMD4 and the speed No. is listed in the following table.
<table><tr><th>CMD4</th><th>CMD3</th><th>CMD2</th><th>CMD1</th><th>Speed No.</th></tr><tr><td>0</td><td>0</td><td>0</td><td>0</td><td>1</td></tr><tr><td>0</td><td>0</td><td>0</td><td>1</td><td>2</td></tr><tr><td colspan="5">...</td></tr><tr><td>1</td><td>1</td><td>1</td><td>1</td><td>16</td></tr></table>The value of CMD(n) is 1 upon active DI logic and 0 upon inactive DI logic.</td></tr>
<tr><td>FunIN.7</td><td>CMD2</td><td>Multi-reference switchover 2</td></tr>
<tr><td>FunIN.8</td><td>CMD3</td><td>Multi-reference switchover 3</td></tr>
<tr><td>FunIN.9</td><td>CMD4</td><td>Multi-reference switchover 4</td></tr>
</table>

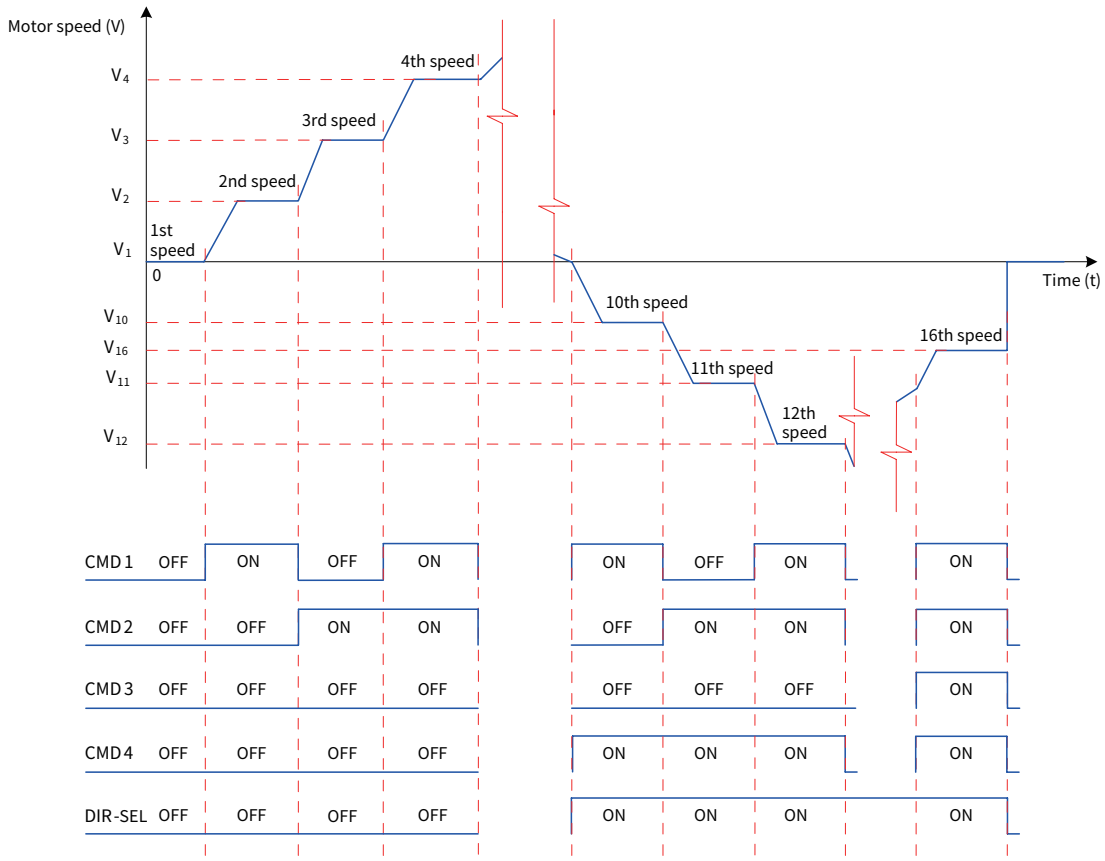

Figure 5-68 Example of multi-speed curve and DI signal states

2) Setting the multi-speed running curve

The following part takes the 1st speed reference as an example to describe the running curve.

☆ Related parameters:

Para.	Name	Value Range	Unit	Function	Setting Condition	Effective Time	Default
H12-03	Acceleration time 1	0 to 65535	ms	Sets the first group of acceleration/deceleration time.	At stop	Immediately	10
H12-04	Deceleration time 1	0 to 65535	ms		At stop	Immediately	10
H12-09	Acceleration time 4	0 to 65535	ms	Sets the fourth group of acceleration/deceleration time.	At stop	Immediately	150
H12-10	Deceleration time 4	0 to 65535	ms		At stop	Immediately	150
H12-20	1st speed reference	–6000 to +6000	RPM	Sets the value of the 1st speed reference.	At stop	Immediately	0
H12-21	Running time of the 1st speed reference	0 to 6553.5	s (min)	Sets the running time of speed 1.	At stop	Immediately	5.0
H12-22	Acceleration/Deceleration time of 1st speed reference	0: Zero acceleration/deceleration time 1: Acceleration/Deceleration time 1 2: Acceleration/Deceleration time 2 3: Acceleration/Deceleration time 3 4: Acceleration/Deceleration time 4	-	Sets the acceleration/deceleration mode of the 1st speed reference.	At stop	Immediately	0

Four groups of acceleration/deceleration time are optional. By default, no acceleration/deceleration time is used. The following part takes H12-01 being set to 1 to describe the actual acceleration/deceleration time and running time.

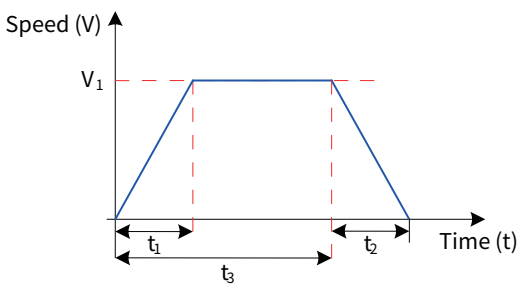

Figure 5-69 Example of curve of a certain speed in multi-speed reference

As shown in the preceding figure, the speed reference is V_1 and the actual acceleration time is t_1:

$$t_1 = \frac{V_1}{1000} \times \text{Acceleration time of the speed reference}$$

The actual deceleration time t_2 is:

$$t_2 = \frac{V_1}{1000} \times \text{Deceleration time of the speed reference}$$

The running time is the sum of the speed variation time from previous speed reference to present speed reference plus the average operating time of present speed reference, that is, t_3 in the preceding figure.

A/B switchover

When H06-02 is set to 3 (A/B switchover), assign a DI with FunIN.4. The signal of the DI terminal determines whether the main reference source A or auxiliary reference source B is valid.

☆ Related function code:

Function No.	Name	Function Name	Description
FunIN.4	CMD-SEL	Main/auxiliary reference switchover	Active: Current running reference being A Inactive: current running reference being B

3) Communication setting

When H06-02 is set to 4 (Communication setting), the speed reference is the value of H31-09 and H31-09 is not displayed on the control panel and can be set only through communication.

☆ Related parameters:

Para.	Name	Value Range	Unit	Function	Setting Condition	Effective Time	Default
H31-09	Speed reference set through communication	–6000.000 to +6000.000	RPM	Sets the speed reference when the speed reference source is communication setting. The accuracy is 0.001 RPM.	During operation	Immediately	-

2 Speed reference direction

A DI terminal with FunIN.26 (speed reference direction selection) is used to change the speed reference direction.

☆ Related function code:

Function No.	Name	Function Name	Description
FunIN.26	SPDDirSel	Speed reference direction selection	Active: Forward direction Inactive: Reverse direction

The actual motor direction is related to the rotation direction defined in H02-02, positive/negative of speed reference, and speed reference direction (FunIN.26).

Table 5-22 Actual motor rotation direction in the speed control mode

H02-02	Positive/Negative of Speed Reference	FunIN.26	Actual Motor Rotation Direction
0	+	Inactive	Counterclockwise
0	+	Active	Clockwise
0	–	Inactive	Clockwise
0	–	Active	Counterclockwise
1	+	Inactive	Clockwise
1	+	Active	Counterclockwise
1	–	Inactive	Counterclockwise
1	–	Active	Clockwise

5.3.2 Setting the Ramp Function

The ramp function converts the speed reference into a large acceleration rate to smoother speed reference. It controls the acceleration rate by setting the acceleration/deceleration time.

A very large acceleration rate in the speed control mode causes motor jitter or sever vibration. Increasing the acceleration/deceleration time smoothens the speed change and prevents mechanical damage.

CAUTION

◆ When the speed reference source is digital setting, analog voltage setting, or jogging, the acceleration time and deceleration time are set in H06-05 and H06-06.

◆ When the speed reference source is multi-speed reference, the acceleration/deceleration time is set in group H12. For details, see *"9.2.17 Group H12: Multi-Speed Parameters"*.

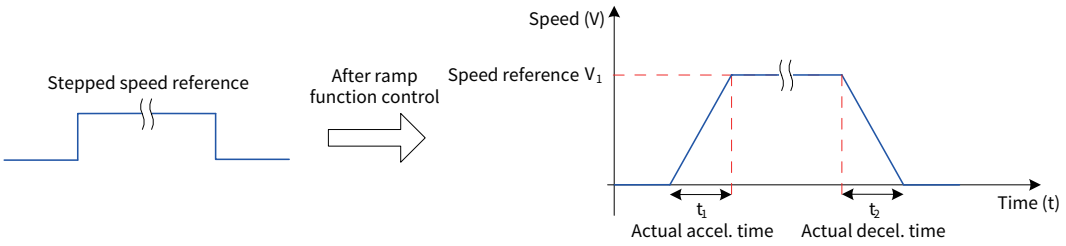

Figure 5-70 Ramp control diagram

H06-05 defines the time for the speed reference to accelerate from 0 RPM to 1000 RPM.

H06-06 defines the time for the speed reference to decelerate from 1000 RPM to 0 RPM.

The formulas for calculating the actual acceleration/deceleration time are as follows:

$$\text{Actual accel. time } t_1 = \frac{\text{Speed reference}}{1000} \times \text{Acceleration ramp time of speed reference}$$

$$\text{Actual decel. time } t_2 = \frac{\text{Speed reference}}{1000} \times \text{Deceleration ramp time of speed reference}$$

☆ Related parameters:

Para.	Name	Value Range	Unit	Function	Setting Condition	Effective Time	Default
H06-05	Acceleration ramp time constant of speed reference	0 to 65535	ms	Sets the acceleration/deceleration time of speed reference in the speed control mode.	During operation	Immediately	0
H06-06	Deceleration ramp time constant of speed reference	0 to 65535	ms		Immediately	During operation	0

5.3.3 Zero Clamp Function

CAUTION

◆ The zero clamp function is used in the system in which the host controller does not construct the position loop in the speed control mode.

◆ If servo motor oscillation occurs in the zero clamp state, adjust the position loop gain.

In the speed control mode, if DI function FunIN.12 (ZCLAMP) is enabled, and the speed reference amplitude is smaller than or equal to the value of H06-15, the servo motor enters the zero clamp state. At this moment, a position loop is built inside the servo drive and the speed reference is invalid. The servo motor is clamped with ±1 pulse of the position at which zero clamp becomes valid. Even if the motor rotates due to external force, it will return to the zero position and be clamped.

When the speed reference amplitude is larger than the value of H06-15, the servo motor exits the zero clamp state and continues running according to the input speed reference. If the signal of the DI terminal with FunIN.12 (ZCLAMP) is inactive, the zero clamp function is disabled.

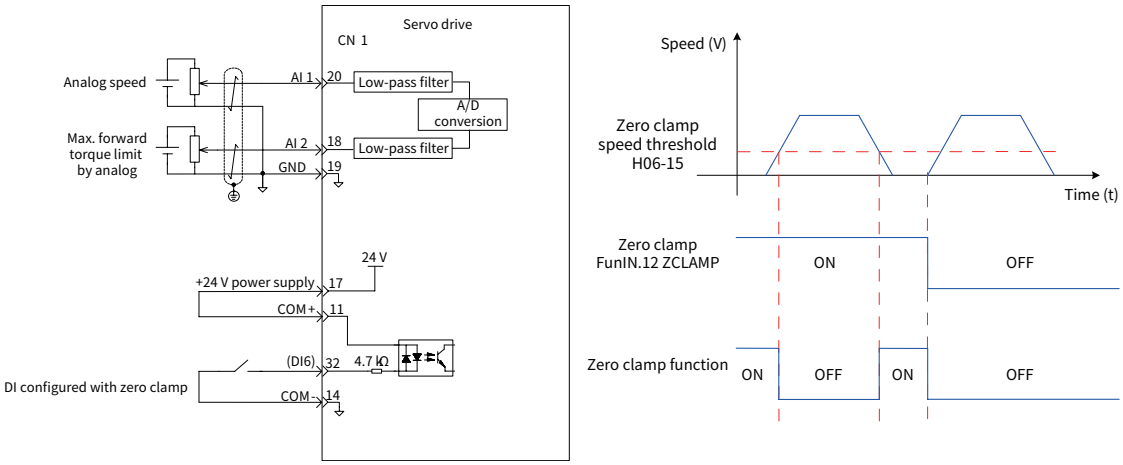

Figure 5-71 Zero clamp wiring and waveform

☆ Related parameters:

Para.	Name	Value Range	Unit	Function	Setting Condition	Effective Time	Default
H06-15	Zero clamp speed threshold	0 to 6000	RPM	Sets the speed threshold for the zero clamp function.	During operation	Immediately	10

☆ Related function code:

Function No.	Name	Function Name	Description
FunIN.12	ZCLAMP	Zero clamp enable	Invalid: Zero clamp disabled Valid: Zero clamp enabled

5.3.4 Speed Reference Limit

CAUTION
◆ When the actual motor speed exceeds the value of H0A-08 (Overspeed threshold), the servo drive reports Er.500 (Motor overspeed). For the settings of H0A-08, see the parameter list in Chapter 8. The speed reference must be smaller than the value of H0A-08.

The speed references in the speed control mode can be limited.

- H06-07 specifies both the positive and negative limits of speed references. If speed references exceed the setting of H06-07, the speed references will be limited as this value.
- H06-08 specifies the positive speed limit. If the positive speed reference exceeds the setting of H06-08, the reference will be limited as this value.
- H06-09 specifies the negative speed limit. If the negative speed reference exceeds the setting of H06-09, the reference will be limited as this value.
- The maximum motor speed (the default limit) varies with the actual motor model.

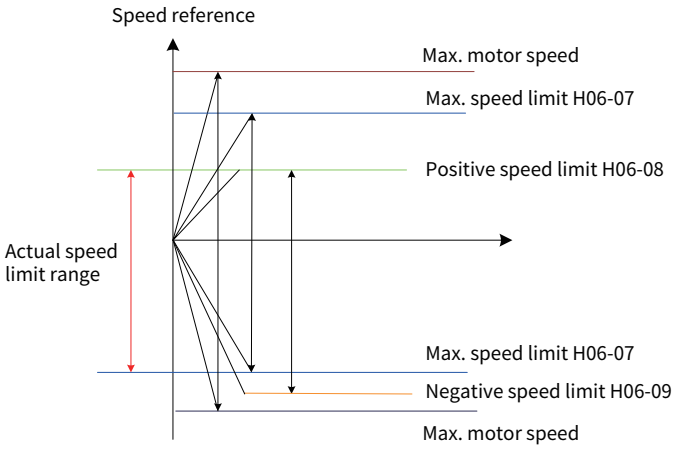

Figure 5-72 Speed reference limit example

The actual motor speed limit shall meet the following requirements:

|Positive speed limit| ⩽ min {maximum motor speed, H06-07, H06-08}

|Negative speed limit| ⩽ min {maximum motor speed, H06-07, H06-09}

☆ Related parameters:

Para.	Name	Value Range	Unit	Function	Setting Condition	Effective Time	Default
H06-07	Max. speed limit	0 to 6000	RPM	Sets the maximum speed limit.	During operation	Immediately	6000
H06-08	Positive speed limit	0 to 6000	RPM	Sets the positive speed limit.	During operation	Immediately	6000
H06-09	Negative speed limit	0 to 6000	RPM	Sets the negative speed limit.	During operation	Immediately	6000

5.3.5 Speed-related DO Signals

Different DO signals are output to the host controller based on comparison between the speed feedback after filter and different thresholds. The related filter time is set in H0A-27.

1 Motor rotation DO signal

When the absolute value of the actual motor speed after filter reaches the setting of H06-16 (Motor speed threshold), the motor can be considered to rotate. At this moment, the servo drive outputs the motor rotation signal (FunOUT.2: TGON) to confirm that the motor has rotated. When the absolute value of the actual motor speed after filter is smaller than the setting of H06-16, the motor is considered not to rotate.

Judgment on the motor rotation signal (FunOUT.2: TGON) is not influenced by the servo drive running status and control mode.

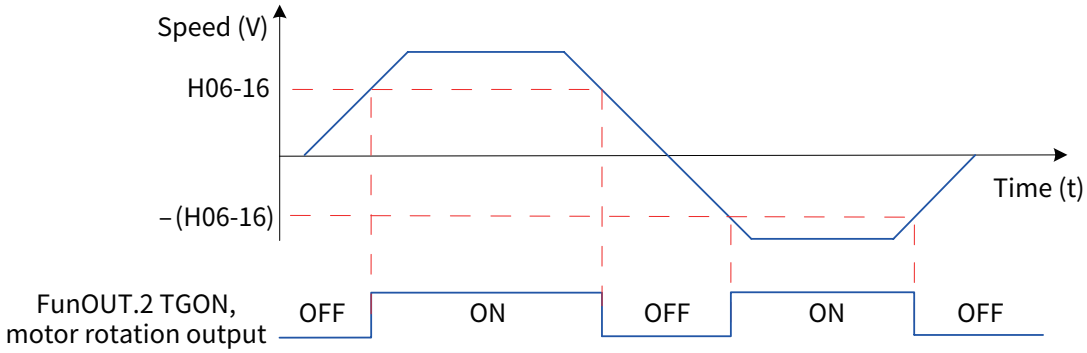

Figure 5-73 Motor rotation signal waveform

NOTE

◆ In the preceding figure, ON indicates that the motor rotation DO signal is active, and OFF indicates that the motor rotation DO signal is inactive.

☆ Related parameters:

Para.	Name	Value Range	Unit	Function	Setting Condition	Effective Time	Default
H06-16	Motor speed threshold	0 to 1000	RPM	Sets the speed threshold at which the motor rotation signal is active.	During operation	Immediately	20

Assign a DO terminal of the servo drive within function 2 (FunOUT.2: TGON, motor rotation) and determine the activation logic of the DO the terminal.

☆ Related function code:

Function No.	Name	Function Name	Description
FunOUT.2	TGON	Motor rotation	Invalid: The absolute value of motor speed after filter is smaller than the value of H06-16. Valid: The absolute value of motor speed after filter is equal to or larger than the value of H06-16.

2 Speed matching DO signal

In the speed control mode, when the absolute value of the difference between the motor speed after filter and the speed reference satisfies the setting of H06-17, the actual motor speed is considered to reach the speed reference. At this moment, the servo drive outputs the speed matching signal (FunOUT.4: V-Cmp). When the absolute value of the difference between the motor speed after filter and the speed reference

exceeds the setting of H06-17, the speed matching signal is inactive.

If the servo drive is not in running status or in the speed control mode, the speed matching signal (FunOUT.4: V-Cmp) is always inactive.

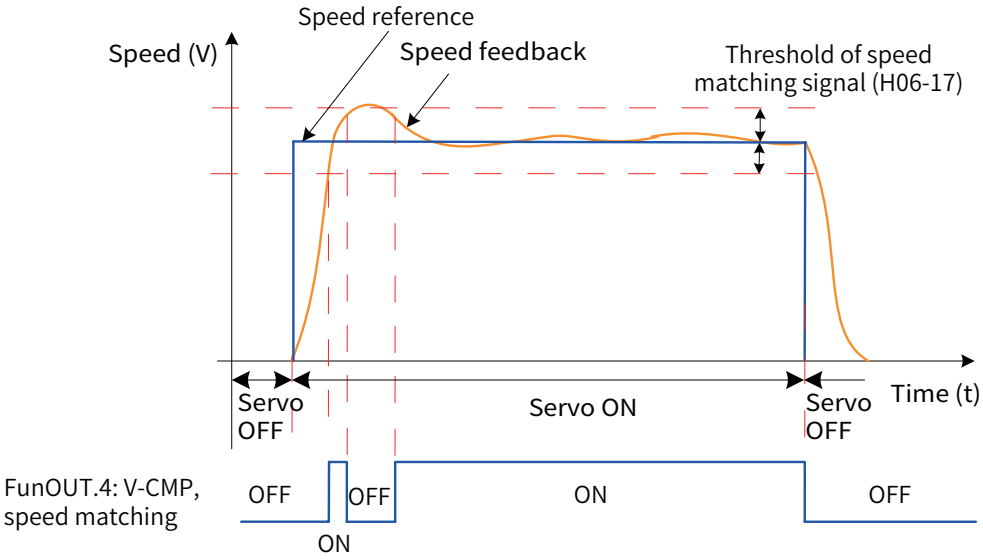

Figure 5-74 Speed matching signal waveform

NOTE

◆ In the preceding figure, ON indicates that the speed matching DO signal is active, and OFF indicates that the speed matching DO signal is inactive.

☆ Related parameters:

Para.	Name	Value Range	Unit	Function	Setting Condition	Effective Time	Default
H06-17	Threshold of speed matching signal	0 to 100	RPM	Sets the threshold at which the speed matching signal is active.	During operation	Immediately	10

Assign a DO terminal of the servo drive within function 4 (FunOUT.4: V-Cmp, speed matching) and determine the activation logic of the DO terminal.

☆ Related function code:

Function No.	Name	Function Name	Description
FunOUT.4	V-Cmp	Speed matching	Invalid: The absolute value of the difference between the motor speed after filter and the speed reference is larger than the setting of H06-17. Valid: The absolute value of the difference between the motor speed after filter and the speed reference is smaller than or equal to the setting of H06-17.

3 Speed reached DO signal

When the absolute value of the motor speed after filter is greater than the setting of H06-18, the motor speed is considered to reach the desired value. At this moment, the servo drive outputs the speed reached signal (FunOUT.19: V-Arr). When the absolute value of the motor speed after filter is smaller than or equal to the setting of H06-18, the speed reached signal is inactive.

Judgment on the speed reached signal (FunOUT.19: V-Arr) is not influenced by the servo drive running status and control mode.

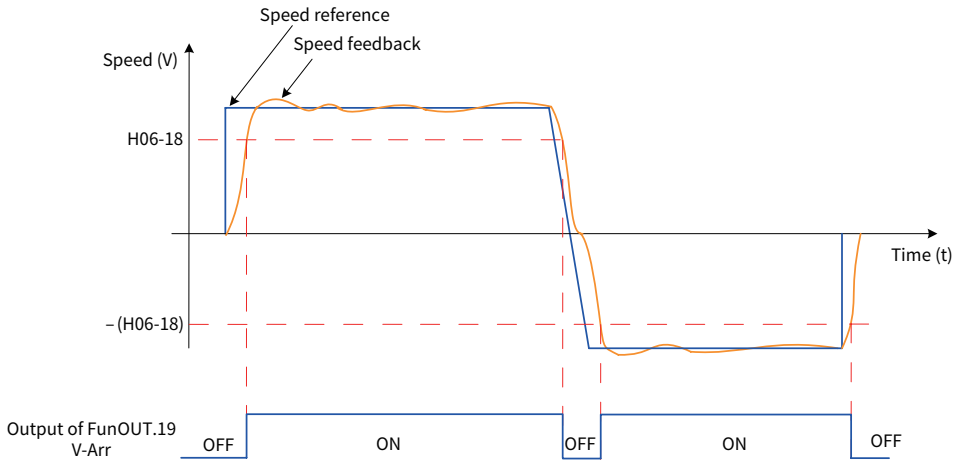

Figure 5-75 Speed reached signal waveform

NOTE

◆ In the preceding figure, ON indicates that the speed reached DO signal is active, and OFF indicates that the speed reached DO signal is inactive.

☆ Related parameters:

Para.	Name	Value Range	Unit	Function	Setting Condition	Effective Time	Default
H06-18	Threshold of speed reached signal	10 to 6000	RPM	Sets the threshold at which the speed reached signal is active.	During operation	Immediately	1000

Assign a DO terminal of the servo drive within function 19 (FunOUT.19: V-Arr, speed reached) and determine the activation logic of the DO terminal.

☆ Related function code:

Function No.	Name	Function Name	Description
FunOUT.19	V-Arr	Speed reached	Invalid: The absolute value of the speed feedback after filter is greater than the value of H06-18. Valid: The absolute value of the speed feedback after filter is smaller than or equal to the value of H06-18.

4 Zero speed DO signal

When the absolute value of the motor speed after filter is smaller than the setting of H06-19, the motor speed is considered to close to 0. At this moment, the servo drive outputs the zero speed signal (FunOUT.3: V-Zero). When the absolute value of the motor speed after filter is greater than or equal to the setting of H06-19, the zero speed signal is inactive.

Judgment on the zero speed signal (FunOUT.3: V-Zero) is not influenced by the servo drive running status and control mode.

When there is interference on the speed feedback, eliminate the interference by using the speed feedback DO filter. Set the filter time constant in H0A-27.

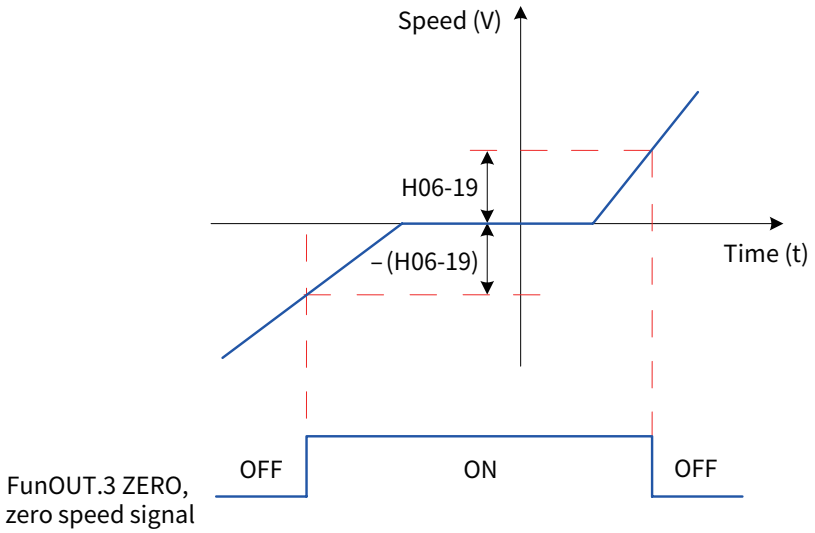

Figure 5-76 Zero speed signal waveform

NOTE

◆ In the preceding figure, ON indicates that the zero speed DO signal is active, and OFF indicates that the zero speed DO signal is inactive.

☆ Related parameters:

Para.	Name	Value Range	Unit	Function	Setting Condition	Effective Time	Default
H06-19	Threshold of zero speed output signal	1 to 6000	RPM	Sets the threshold at which the zero speed signal is active.	During operation	Immediately	10

Assign a DO terminal of the servo drive within function 3 (FunOUT.3: V-Zero, zero speed) and determine the activation logic of the DO terminal.

☆ Related function code:

Function No.	Name	Function Name	Description
FunOUT.3	V-Zero	Zero speed	Invalid: The absolute deviation between the motor speed feedback and the speed reference is greater than the value of H06-19. Valid: The absolute deviation between the motor speed feedback and the speed reference is smaller than or equal to the value of H06-19.

5.3.6 Function Code Block Diagram of Speed Control Mode

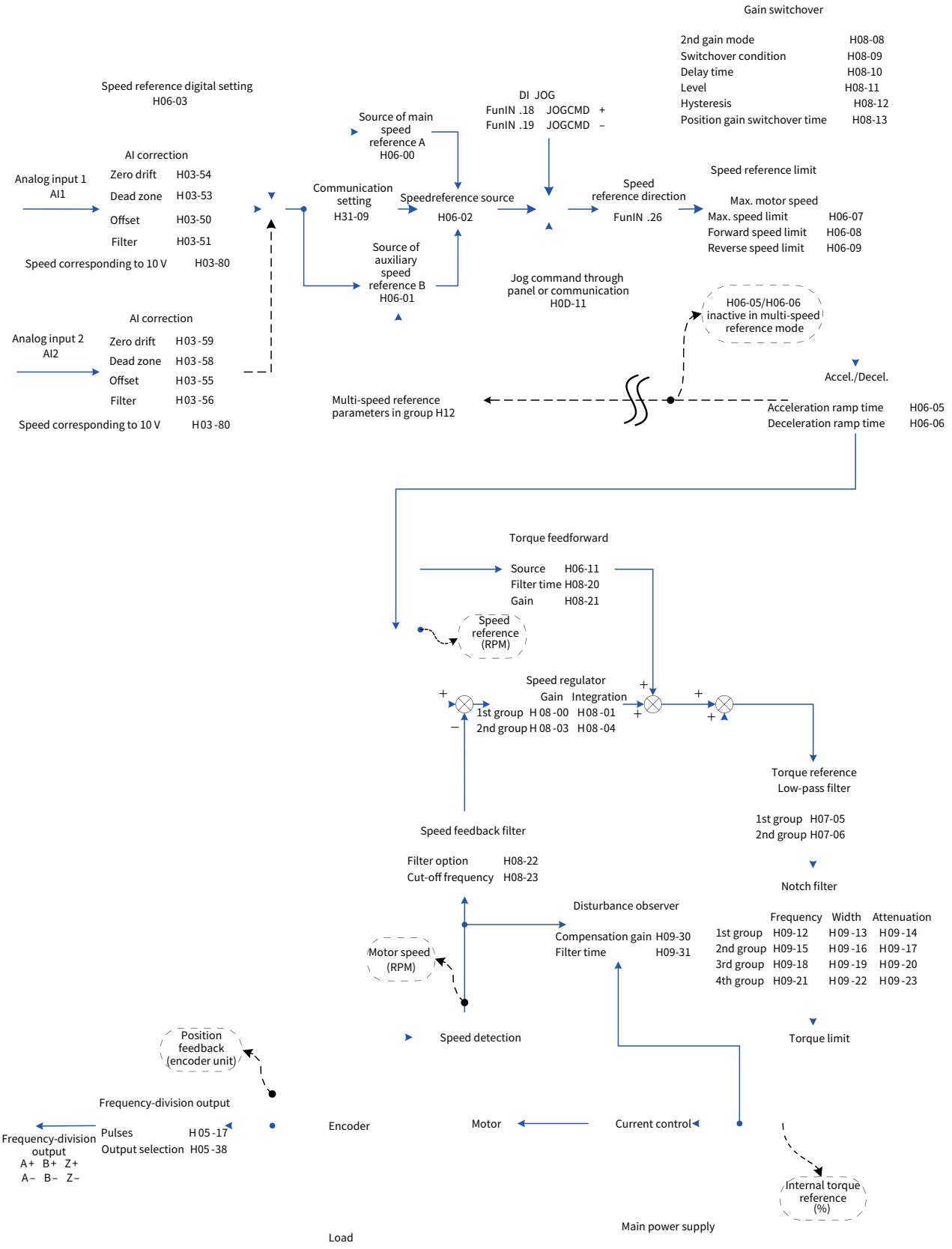
Gain switchover
2nd gain mode H08-08
Switchover condition H08-09
Delay time H08-10
Level H08-11
Hysteresis H08-12
Position gain switchover time H08-13
Speed reference digital setting
H06-03
DI JOG
FunIN .18 JOGCMD +
FunIN .19 JOGCMD –
Source of main speed reference A
H06-00
AI correction
Analog input 1
AI1
Zero drift H03-54
Dead zone H03-53
Offset H03-50
Filter H03-51
Speed corresponding to 10 V H03-80
Communication setting
H31-09
Speedreference source
H06-02
Speed reference direction
FunIN .26
Speed reference limit
Max. motor speed
Max. speed limit H06-07
Forward speed limit H06-08
Reverse speed limit H06-09
Source of auxiliary speed reference B
H06-01
Jog command through panel or communication
H0D-11
H06-05/H06-06 inactive in multi-speed reference mode
AI correction
Analog input 2
AI2
Zero drift H03-59
Dead zone H03-58
Offset H03-55
Filter H03-56
Speed corresponding to 10 V H03-80
Multi-speed reference parameters in group H12
Accel./Decel.
Acceleration ramp time H06-05
Deceleration ramp time H06-06
Torque feedforward
Source H06-11
Filter time H08-20
Gain H08-21
Speed reference (RPM)
Speed regulator
Gain Integration
1st group H08-00 H08-01
2nd group H08-03 H08-04
Torque reference Low-pass filter
1st group H07-05
2nd group H07-06
Speed feedback filter
Filter option H08-22
Cut-off frequency H08-23
Notch filter
Frequency Width Attenuation
1st group H09-12 H09-13 H09-14
2nd group H09-15 H09-16 H09-17
3rd group H09-18 H09-19 H09-20
4th group H09-21 H09-22 H09-23
Disturbance observer
Compensation gain H09-30
Filter time H09-31
Motor speed (RPM)
Speed detection
Torque limit
Position feedback (encoder unit)
Frequency-division output
Pulses H05-17
Output selection H05-38
Frequency-division output
A+ B+ Z+
A– B– Z–
Encoder
Motor
Current control
Internal torque reference (%)
Load
Main power supply

5.4 Torque Control Mode

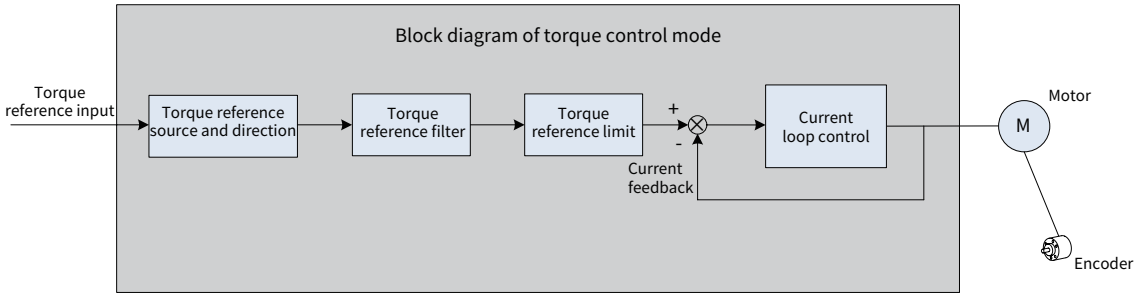

Figure 5-77 Torque control block diagram

Set H02-00 to 2 on the operating panel or Inovance software tool to enable the torque control mode.

Set the servo drive parameters based on the mechanical structure and specifications. The following part uses the basic parameter setting to describe the torque control mode.

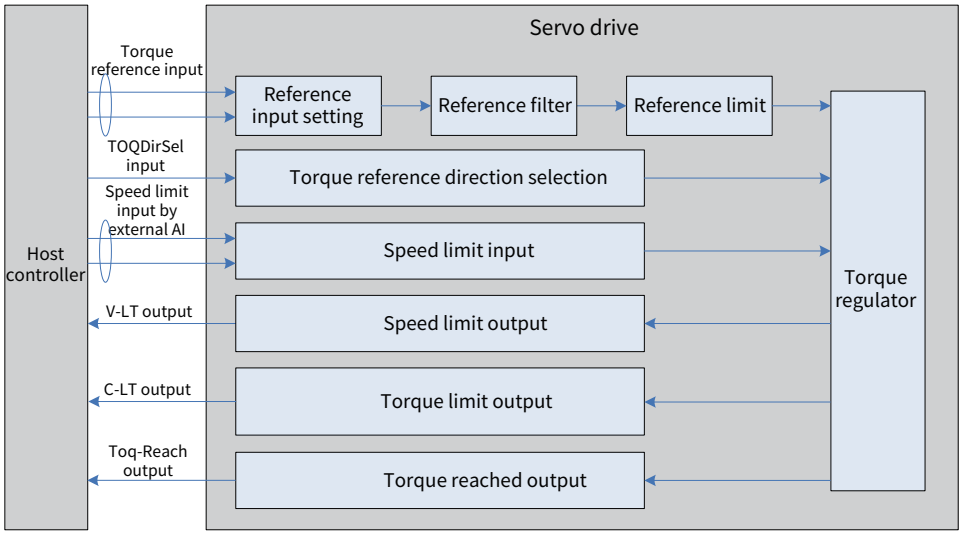

Figure 5-78 Signal exchange between the servo drive and the host controller

5.4.1 Torque Reference Input Setting

1 Torque reference source

In the torque control mode, five methods of obtaining torque references are available and you can select one in H07-02.

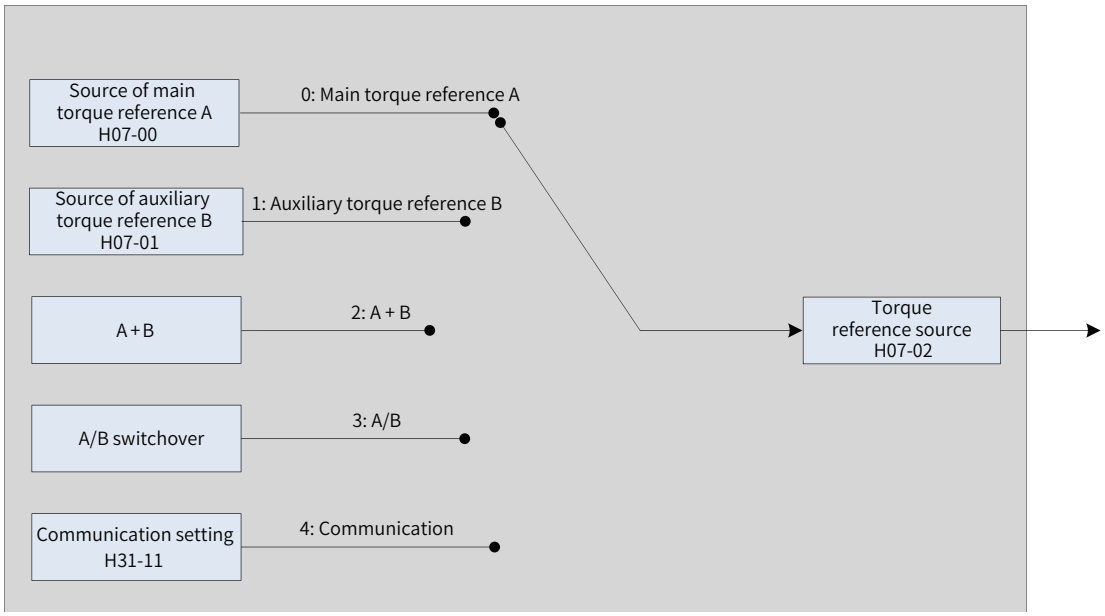

Figure 5-79 Selection of torque reference source

☆ Related parameters:

Para.	Name	Value Range	Unit	Function	Setting Condition	Effective Time	Default
H07-02	Torque reference source	0: Source of main torque reference A 1: Source of auxiliary torque reference B 2: A + B 3: A/B switchover 4: Communication	-	Selects the torque reference source.	At stop	Immediately	0

■ Source of main torque reference A

The sources of main torque reference A include digital setting and analog voltage setting. Digital setting produces internal torque references, and analog voltage setting produces external torque references.

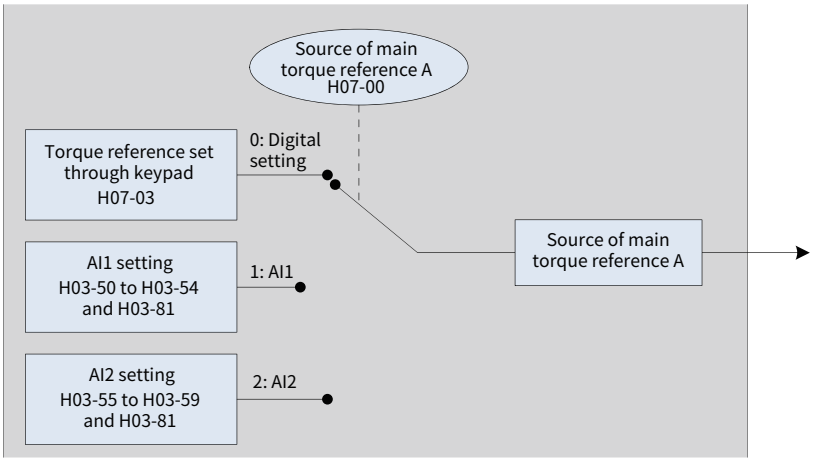

Figure 5-80 Source of main torque reference A

☆ Related parameters:

Para.	Name	Value Range	Unit	Function	Setting Condition	Effective Time	Default
H07-00	Source of main torque reference A	0: Digital setting (H07-03) 1: AI1 2: AI2	-	Selects the source of main torque reference A.	At stop	Immediately	0

1) Digital setting

The torque reference is set in H07-03 as a percentage relative to the rated motor torque.

☆ Related parameters:

Para.	Name	Value Range	Unit	Function	Setting Condition	Effective Time	Default
H07-03	Torque reference set through keypad	–300.0 to +300.0	%	Sets the internal torque reference. The accuracy is 0.1%.	During operation	Immediately	0

2) Analog voltage setting

The analog voltage signal output by the host controller or other devices is processed and then used as the torque reference.

■ Analog voltage input terminal

The servo drive provides two analog input channels: AI1 and AI2, of which the maximum input voltage is ±10 VDC and input impedance is about 9 kΩ.

Analog input circuit:

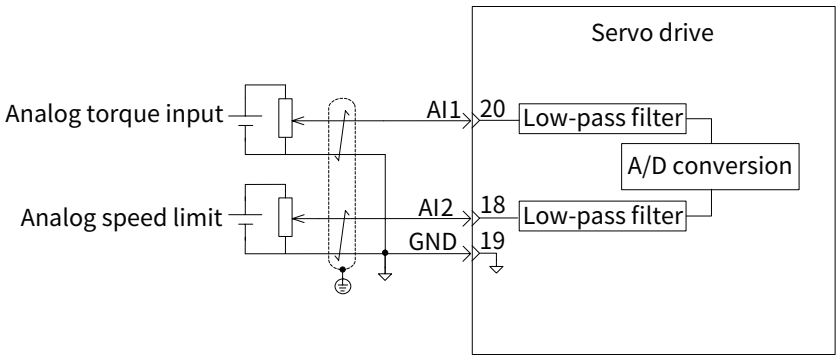

Operation method:

The following figure takes AI1 as an example to describe the analog voltage setting of the torque reference.

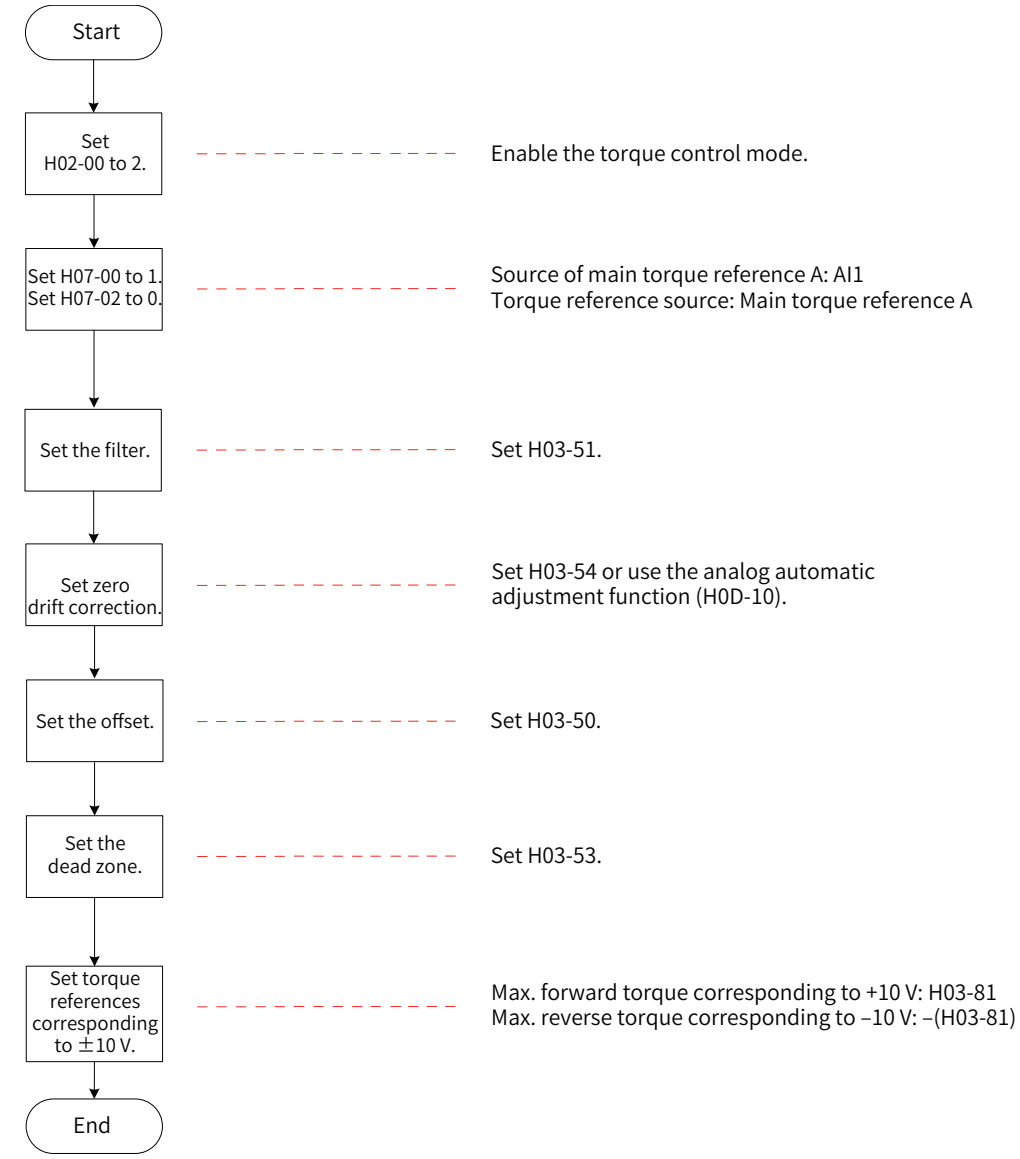

Figure 5-81 Flowchart of setting torque reference by analog voltage

★ Terms:

Zero drift indicates the value of the drive sampling voltage relative to GND upon zero AI voltage.

Offset indicates the input voltage value of the analog channel when the sampling voltage is zero after zero drift correction.

Dead zone indicates the input voltage range of the analog channel when the sampling voltage is zero.

In Figure 6-85, y_1 is the output voltage of the analog channel not processed, and y_6 is the final torque reference.

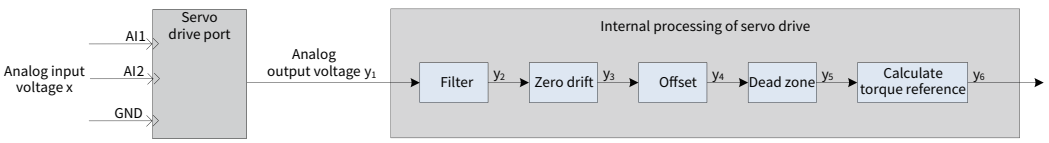

Figure 5-82 AI processing of servo drive

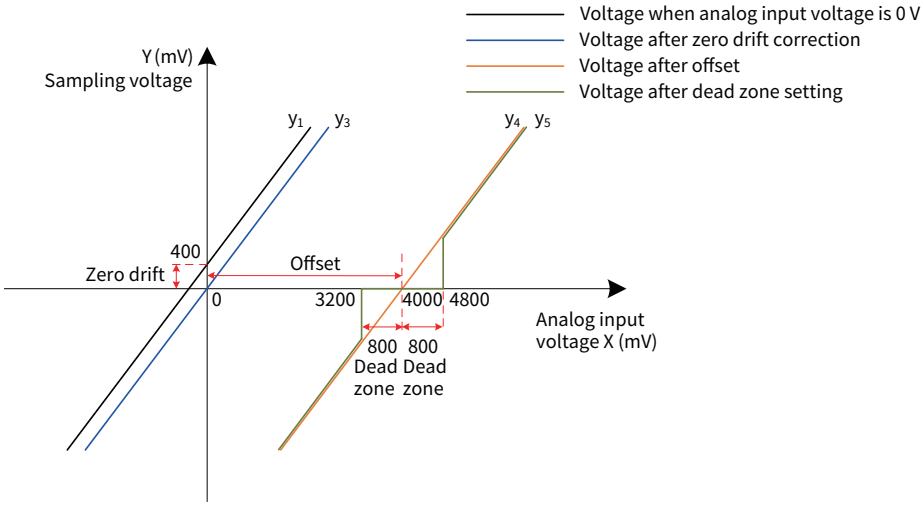

Figure 5-83 Example of sampling voltage and AI processing of servo drive

■ Filter:

The servo drive provides the analog channel filter function. Setting the filter time constant in H03-51 prevents motor reference fluctuation due to instable analog input voltage and eliminates motor malfunction due to signal interference. The filter function cannot eliminate or suppress the zero drift or dead zone.

■ Zero drift correction:

It corrects the analog output voltage offset relative to the output for the actual input voltage 0 V.

In the preceding figure, y_1 is the output voltage of the analog channel not processed. Take the filter time constant setting to 0.00 ms as an example, the sampling voltage after filter y_2 is same as y_1.

When the actual input voltage x is 0, the output voltage y_1 is 400 mV. Therefore, the zero drift voltage is 400 mV.

Set H03-54 to 400.0 (mV). The sampling voltage after zero drift correction is shown as y_3. $y_3 = y_1 - 400.0$

Zero drift correction can also be performed by using the analog automatic adjustment function in H0D-10.

■ Offset setting:

It sets the actual input voltage corresponding to sampling voltage 0.

Assume that the actual input voltage is 4000 mV when the sampling voltage y_3 is 0. That is, the offset is 4000 mV.

Set H03-50 to 4000 (mV). The sampling voltage after zero drift correction is shown as y_4. $y_4 = y_3 - 4000$

■ Dead zone correction:

It sets the valid input voltage range when the sampling voltage of the servo drive is not 0.

After the offset is set, if the sampling voltage is always 0 when the input voltage x is within the range of 3200 mV to 4800 mV, the dead zone is 800 mV.

Set H03-53 to 800 (mV). The sampling voltage after dead zone correction is shown as y_5.

$$y_5 = \begin{cases} 0 & 3200 \leqslant x \leqslant 4800 \\ y_4 & 4800 < x \leqslant +10000 \text{ or } -10000 \leqslant x < 3200 \end{cases}$$

■ Speed reference calculation:

After setting the zero drift, offset, and dead zone, set the torque reference corresponding to 10 V (10,000

mV) in H03-81 to obtain the actual torque reference y6:

$$y_6 = \frac{y_5}{10000} \times (\text{H03-81})$$

The value is used as the torque reference set through analog in the torque control mode.

The following figures show the relationship between analog input and speed values respectively when the offset is absent and present. After all settings are made correctly, view the sampling voltage of AI1 in H0B-21 or the torque reference corresponding to analog input in H0B-02.

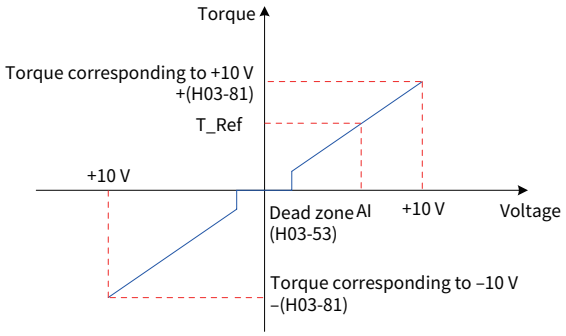

No-offset AI1

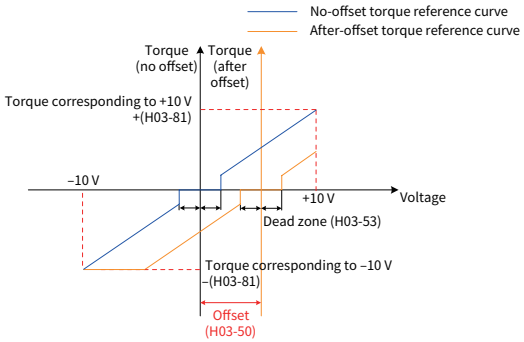

After-offset AI1

The relationship between the final torque reference y_6 and the input voltage x is:

$$y_6 = \begin{cases} 0 & \text{B-C} \leqslant x \leqslant \text{B+C} \\ (x\text{-B}) \times \dfrac{\text{H03-80}}{10} & \text{B + C < x} \leqslant +10000 \text{ or } -10000 \leqslant x < \text{B – C} \end{cases}$$

Where, B: offset; C: dead zone

☆ Related parameters:

Para.	Name	Value Range	Unit	Function	Setting Condition	Effective Time	Default
H03-50	AI1 offset	–5000 to +5000	mV	Sets the offset of the analog channel AI1.	During operation	Immediately	0
H03-51	AI1 input filter time constant	0 to 655.35	ms	Sets the moving average filter time constant of the analog channel AI1.	During operation	Immediately	2.00
H03-53	AI1 dead zone	0 to 1000.0	mV	Sets the dead zone of the analog channel AI1.	During operation	Immediately	10.0
H03-54	AI1 zero drift	–500.0 to +500.0	mV	Sets the zero drift of the analog channel AI1.	During operation	Immediately	0.0
H03-81	Torque corresponding to analog 10 V	1.00 to 8.00 times of rated torque	Multiple	Sets the torque corresponding to analog 10 V.	At stop	Immediately	1.00
H0D-10	Analog channel automatic adjustment	0: No operation 1: AI1 adjustment 2: AI2 adjustment	-	Defines whether to enable automatic zero drift correct of AI1 and AI2.	At stop	Immediately	0

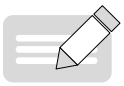

NOTE

◆ The setting method of AI2 is the same as that of AI1 described above. For detailed parameter descriptions, see descriptions of parameters *H3-50 to H3-59* in Chapter 8.

3) Source of auxiliary torque reference B

The source of auxiliary torque reference B is set in the same way as the source of main torque reference A. For descriptions of related parameters, see *"9.2.8 Group H07: Torque Control Parameters"*.

4) A/B switchover

When H07-02 is set to 3 (A/B switchover), assign a DI terminal with FunIN.4. The signal of the DI terminal determines whether the main reference source A or auxiliary reference source B is valid.

☆ Related function code:

Function No.	Name	Function Name	Description
FunIN.4	CMD-SEL	Main/auxiliary reference switchover	OFF: Current running reference being A ON: current running reference being B

5) Communication setting

When H07-02 is set to 4 (Communication setting), the torque reference is the value of H31-11 and H31-11 is not displayed on the control panel and can be set only through communication.

☆ Related parameters:

Para.	Name	Value Range	Unit	Function	Setting Condition	Effective Time	Default
H31-11	Torque reference set through communication	–100.000 to +100.000	%	Sets the torque reference when the torque reference source is communication setting. The accuracy is 0.001%.	During operation	Immediately	-

2 Torque reference direction

A DI terminal with FunIN.25 (Torque reference direction) is used to change the torque reference direction.

☆ Related function code:

Function No.	Name	Function Name	Description
FunIN.25	ToqDirSel	Torque reference direction	Invalid: The actual torque reference direction is the same as the set torque reference direction. Invalid: The actual torque reference direction is opposite to the set torque reference direction.

The actual motor direction is related to the rotation direction defined in H02-02, positive/negative of torque reference, and torque reference direction (FunIN.25).

Table 5-23 Actual motor rotation direction in the torque control mode

H02-02	Positive/Negative of Torque Reference	FunIN.25	Actual Motor Rotation Direction
0	+	Inactive	Counterclockwise
0	+	Active	Clockwise
0	–	Inactive	Clockwise
0	–	Active	Counterclockwise
1	+	Inactive	Clockwise

1	+	Active	Counterclockwise
1	-	Inactive	Counterclockwise
1	–	Active	Clockwise

5.4.2 Torque Reference Filter

CAUTION	
	◆ A very large filter time constant reduces the responsivity. Check the responsivity during the setting.

In the position, speed, torque, and hybrid control modes, the servo drive can perform low-pass filter on torque references to smoothen references and decrease vibration.

The servo drive provides two low-pass filters for torque references. By default, the 1st filter is used.

When the gain switchover function is enabled (H08-08 set to 1 and H08-09 set to a non-zero value) and the condition of H08-09 is met, the 2nd filter is used.

☆ Related parameters:

Para.	Name	Value Range	Unit	Function	Setting Condition	Effective Time	Default
H07-05	Torque reference filter time constant	0 to 30.00	ms	Sets the time constant of the 1st torque reference low-pass filter.	During operation	Immediately	0.79
H07-06	2nd torque reference filter time constant	0 to 30.00	ms	Sets the time constant of the 2nd torque reference low-pass filter.	During operation	Immediately	0.79

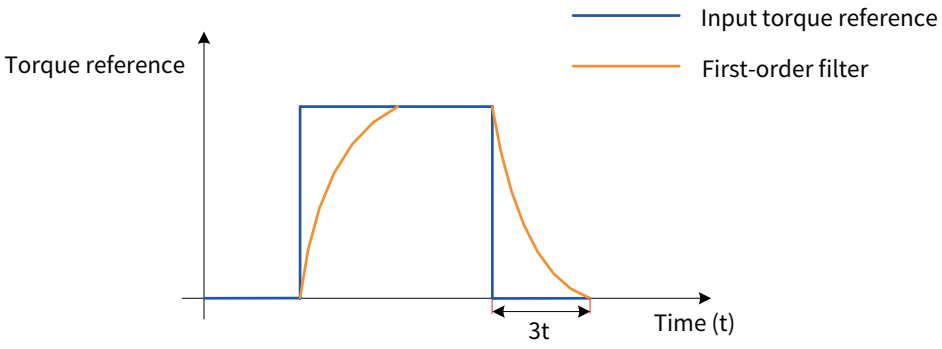

Figure 5-84 Rectangular torque reference first-order filter

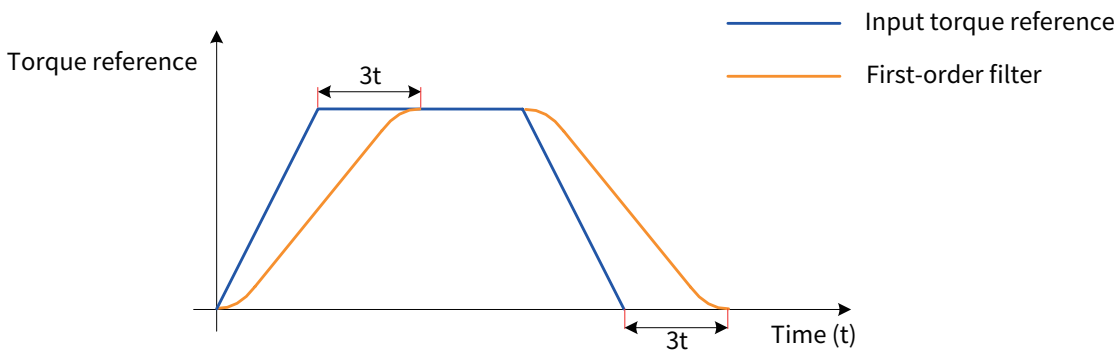

Figure 5-85 Trapezoid torque reference first-order filter

5.4.3 Torque Reference Limit

CAUTION

◆ Torquer reference limit is mandatory in the position control, speed control, torque control, and hybrid control modes.

Torque references are limited to protect the servo drive and motor.

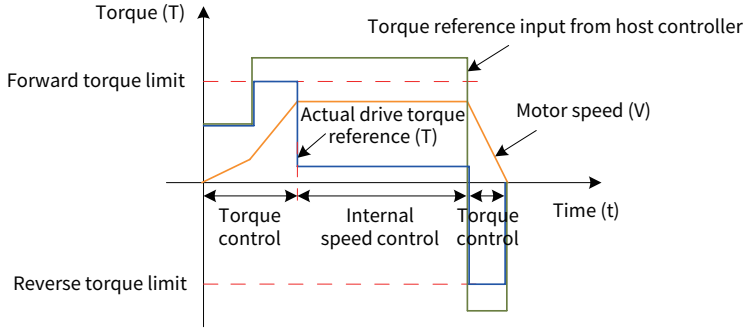

Figure 5-86 Torque setting and torque limit

When the absolute value of the torque reference input from the host controller or output by the speed regulator is greater than the absolute value of the torque reference limit, the actual torque reference of the servo drive is restricted to the torque reference limit. Otherwise, the torque reference input from the host controller or output by the speed regulator is used.

Only one torque reference limit is valid at a moment. Both positive and negative torque limits do not exceed the maximum torque of the servo drive and motor and ±300.0% of the rated torque.

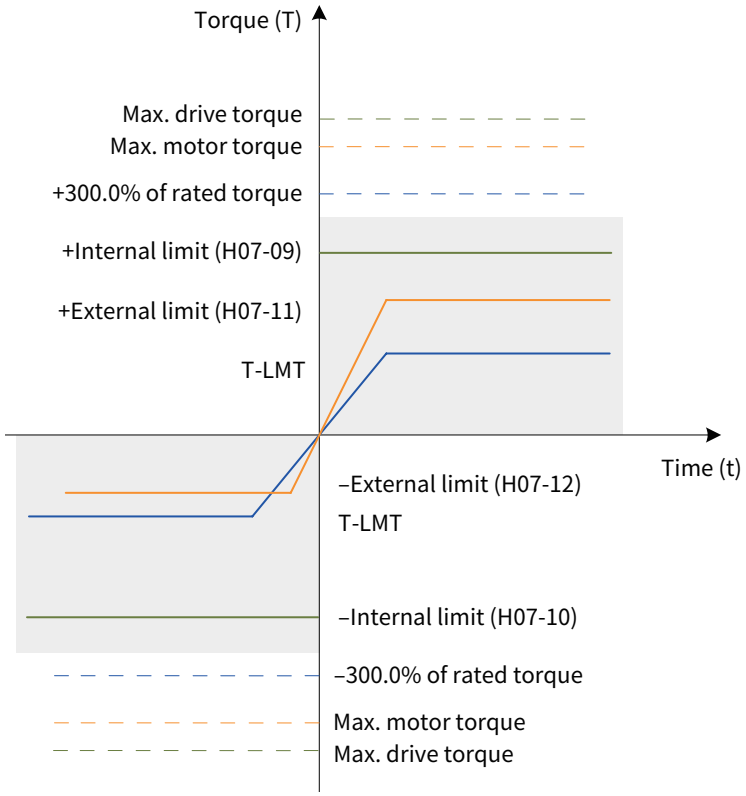

Figure 5-87 Torque limit example

1 Setting the torque limit source

The torque limit source is set in H07-07. After the torque limit is set, the servo drive torque reference is restricted to be within the torque limit. After the torque reference reaches the limit, the motor runs according to the torque limit. The torque limit must be set according to the load conditions. If the setting is very small, the motor acceleration/deceleration time is prolonged, and the actual motor speed may not reach the required value when running at constant speed.

☆ Related parameters:

Para.	Name	Value Range	Unit	Function	Setting Condition	Effective Time	Default
H07-07	Torque limit source	0: Forward/Reverse internal torque limit 1: Forward/Reverse external torque limit 2: T-LMT as external torque limit 3: Smaller of forward/reverse external torque limit and T-LMT as external torque limit 4: Switchover between forward/reverse external torque limit and external T-LMT torque limit	-	Selects the torque limit source.	At stop	Immediately	0

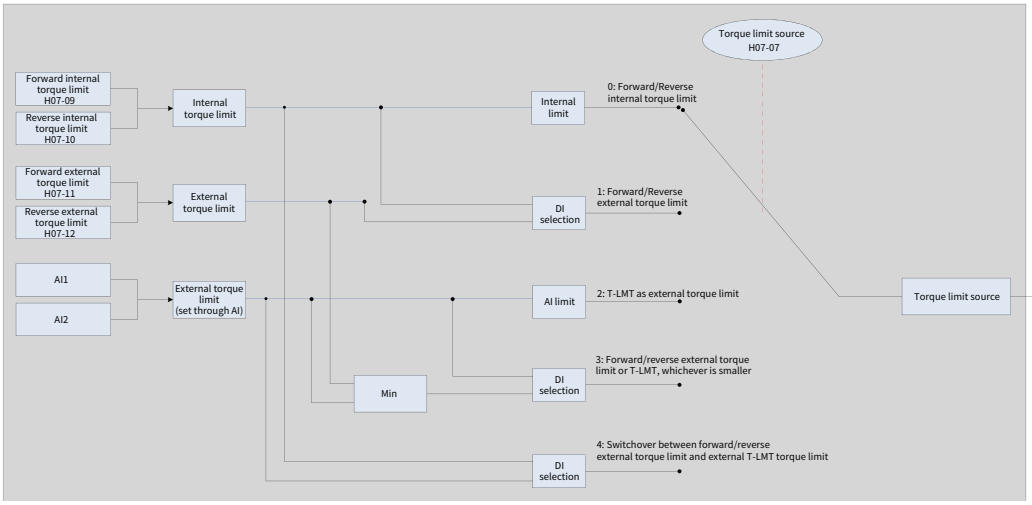

Figure 5-88 Torque limit source

The following figures show the torque limit curves when the absolute torque reference input from the host controller is greater than the torque limit.

1) H07-07 set to 0: Forward/Reverse internal torque limit

The torque reference limit value is determined by H07-09 and H07-10.

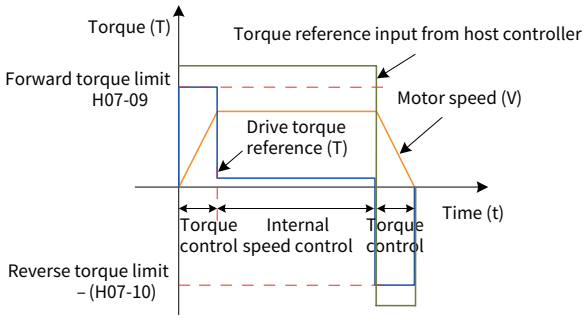

Figure 5-89 Torque limit curve when H07-07 set to 0

2) H07-07 set to 1: Forward/Reverse external torque limit

The torque reference limit value is determined by the logic state of external DI signals. The forward torque limit value is selected between H07-09 and H07-11. The reverse torque limit value is selected between H07-10 and H07-12.

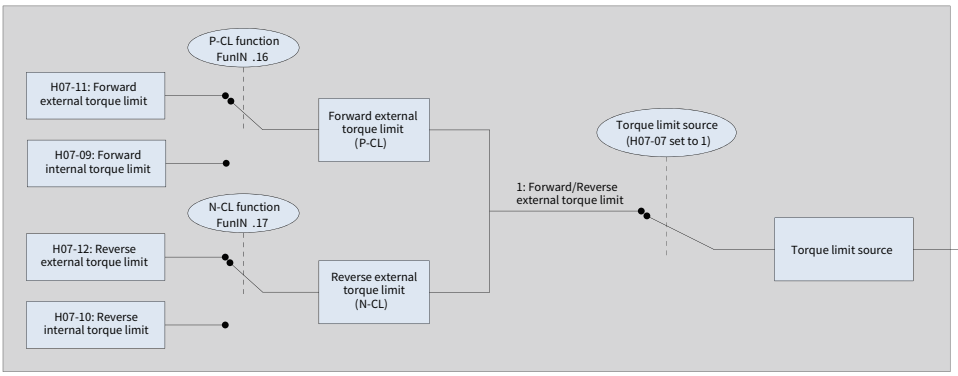

Figure 5-90 Torque limit source when H07-07 set to 1

Table 5-24 Descriptions of H07-07 set to 1

State of DI Signal		P-CL	
		OFF	ON
N-CL	OFF	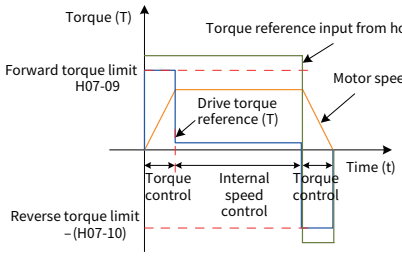	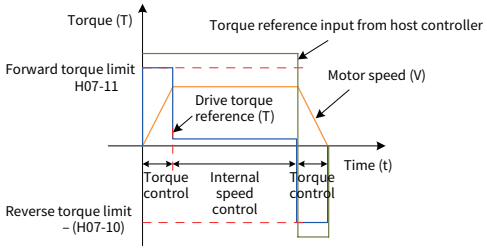
	ON	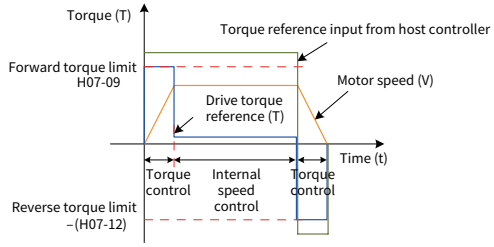	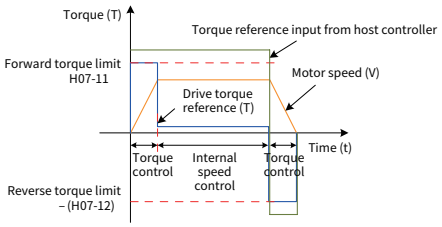

Assign two DI terminals of the servo drive with FunIN.16 (P-CL: forward/reverse external torque limit) and FunIN.17 (N-CL: reverse external torque limit), and set the terminal logics.

☆ Related function code:

Function No.	Name	Function Name	Description
FunIN.16	P-CL	Forward external torque limit	Switches the torque limit source by setting H07-07 (Torque limit source). When H07-07 set to 1: Valid: Forward external torque limit enabled Invalid: Forward internal torque limit enabled When H07-07 set to 3 and AI limit greater than forward external limit: Valid: Forward external torque limit enabled Invalid: AI torque limit enabled When H07-07 set to 4: Valid: AI torque limit enabled Invalid: Forward internal torque limit enabled
FunIN.17	N-CL	Reverse external torque limit	Switches the torque limit source by setting H07-07 (Torque limit source). When H07-07 set to 1: Valid: Reverse external torque limit enabled Invalid: Reverse internal torque limit enabled When H07-07 set to 3 and AI limit smaller than Reverse external limit: Valid: Reverse external torque limit valid Invalid: AI torque limit enabled When H07-07 set to 4: Valid: AI torque limit enabled Invalid: Reverse internal torque limit enabled

3) H07-07 set to 2: T-LMT as external torque limit

The torque limit is determined by the torque corresponding to the input voltage of the AI terminal selected in H07-08.

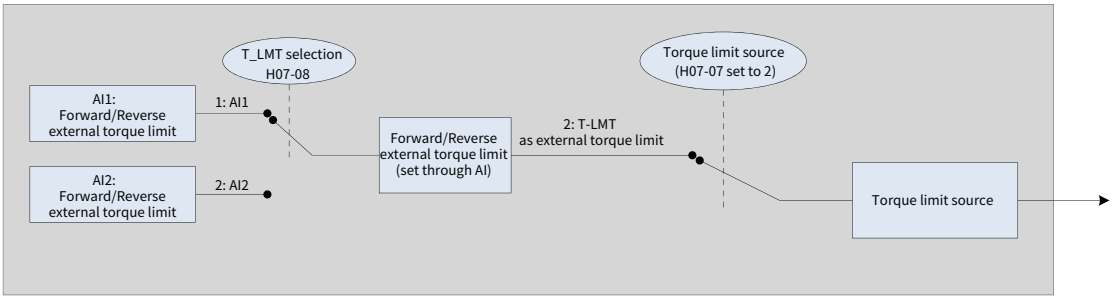

Figure 5-91 Torque limit source when H7-07 set to 2

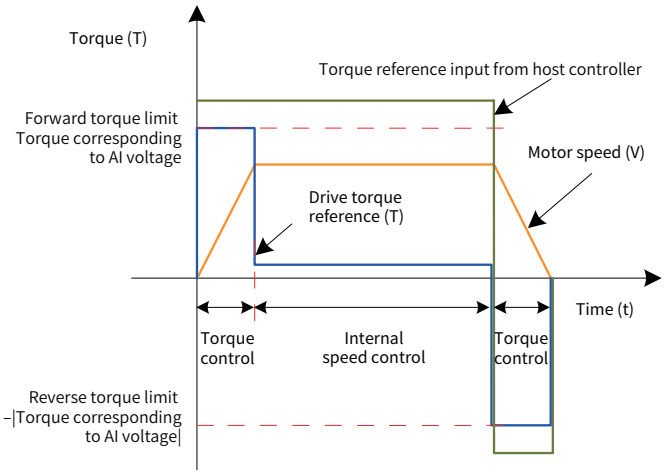

Figure 5-92 Torque limit curve when H07-07 set to 2

For the setting of the relationship between the torque and the analog voltage for AI1 and AI2, see the description of parameters H03-50 to H03-54 and H03-81 in Chapter 7.

4) H07-07 set to 3: Smaller of forward/reverse external torque limit and T-LMT as external torque limit

Forward torque limit: based on the AI terminal selected in H07-08.

When the logic of the external DI signal (P-CL) is inactive, the forward torque limit is determined by the torque corresponding to the input voltage of the AI terminal.

When the logic of the external DI signal (P-CL) is active, the forward torque limit is determined by the smaller of the value of H07-11 and the torque corresponding to the input voltage of the AI terminal.

Reverse torque limit: based on the AI terminal selected in H07-08.

When the logic of the external DI signal (N-CL) is inactive, the negative torque limit is determined by the torque corresponding to the input voltage of the AI terminal.

When the logic of the external DI signal (N-CL) is active, the negative torque limit is determined by the smaller of the value of H07-12 and the torque corresponding to the input voltage of the AI terminal.

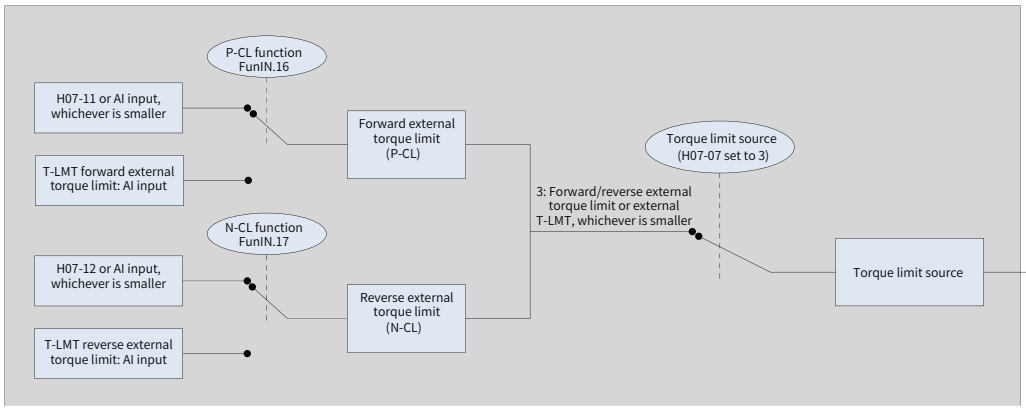

Figure 5-93 Torque limit source when H7-07 set to 3

Table 5-25 Descriptions of H07-07 set to 3

State of DI Signal		P-CL	
		OFF	ON
N-CL	OFF	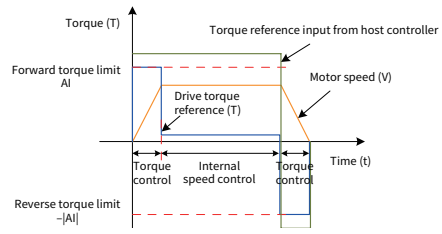	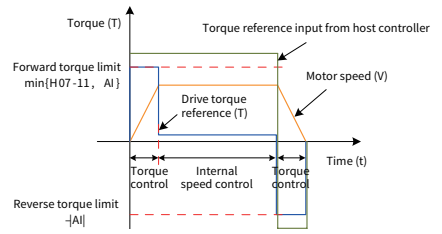
	ON	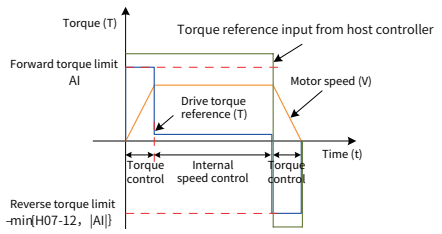	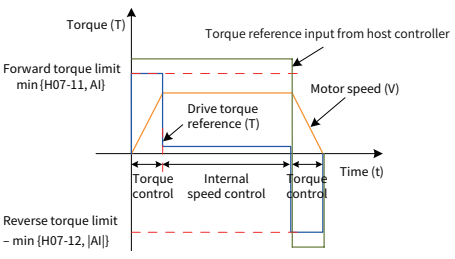

5) H07-07 set to 4: Switchover between forward/reverse external torque limit and external T-LMT torque limit

Forward torque limit: based on the AI terminal selected in H07-08.

When the logic of the external DI signal (P-CL) is inactive, the forward torque limit is determined by H07-09.

When the logic of the external DI signal (P-CL) is active, the forward torque limit is determined by the torque corresponding to the input voltage of the AI terminal.

Reverse torque limit: based on the AI terminal selected in H07-08.

When the logic of the external DI signal (N-CL) is inactive, the reverse torque limit is determined by H07-10.

When the logic of the external DI signal (N-CL) is active, the reverse torque limit is determined by the torque corresponding to the input voltage of the AI terminal.

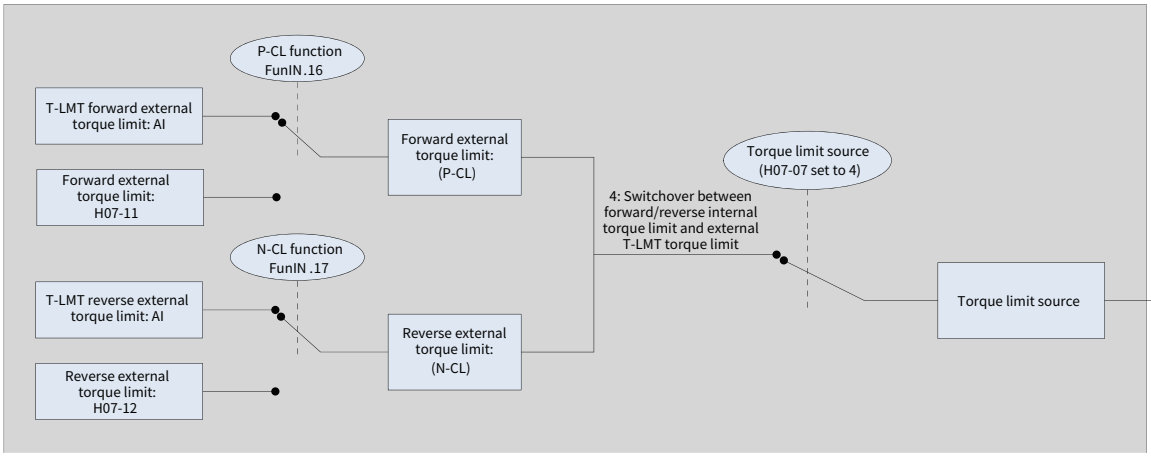

Figure 5-94 Torque limit source when H7-07 set to 4

Table 5-26 Descriptions of H07-07 set to 4

State of DI Signal		P-CL	
		OFF	ON
N-CL	OFF	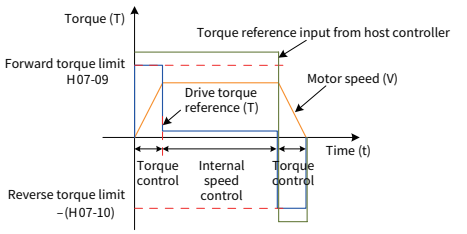	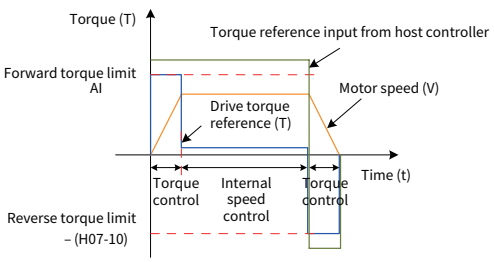
	ON	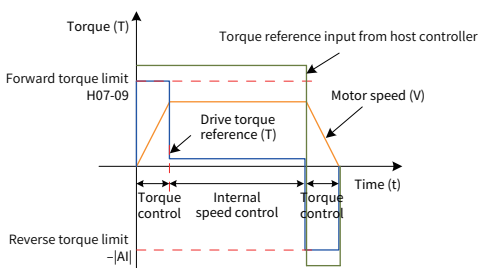	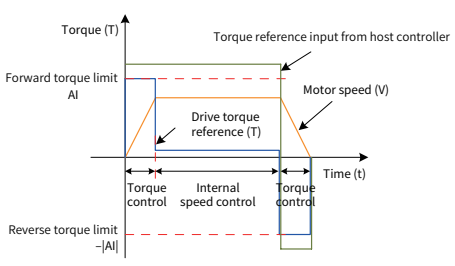

Related parameters:

Para.	Name	Value Range	Unit	Function	Setting Condition	Effective Time	Default
H07-08	T-LMT selection	1-AI1 2-AI2	-	Selects the analog input channel of the torque limit signal.	At stop	Immediately	2
H07-09	Forward internal torque limit	0 to 300.0	%	Sets the forward/reverse internal torque limit value (100% corresponds to the rated torque).	During operation	Immediately	300.0
H07-10	Reverse internal torque limit	0 to 300.0	%		During operation	Immediately	300.0
H07-11	Forward external torque limit	0 to 300.0	%	Sets the forward/reverse external torque limit value (100% corresponds to the rated torque).	During operation	Immediately	300.0
H07-12	Reverse external torque limit	0 to 300.0	%		During operation	Immediately	300.0

2 Setting the torque limit DO source

When the torque reference reaches the torque limit, the servo drive outputs the torque limit signal (FunOUT.7: C-LT, torque limit) to the host controller. Assign a DO terminal of the servo drive with FunOUT.7 and set the terminal logic.

☆ Related function code:

Function No.	Name	Function Name	Description
FunOUT.7	C-LT	Torque limit	Valid: The servo drive torque reference reaches the torque limit and is restricted to this value. Invalid: The servo drive torque reference does not reach the torque limit.

5.4.4 Speed Limit in Torque Control

In the torque control mode, if the torque reference is greater than the load torque on the mechanical side, the motor keeps accelerating, which may cause overspeed and damage to the machine. The motor speed needs to be limited to protect the machine.

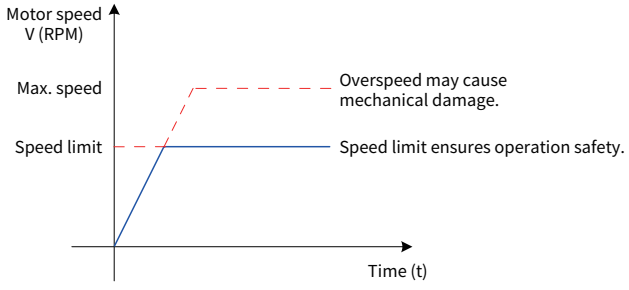

Figure 6-103 Speed limit in torque control

1 Setting the speed limit source

In the torque control mode, the speed limit source is defined in H07-17. After the speed limit is set, the actual motor speed is restricted to be within the speed limit. After the motor speed reaches the speed limit, the motor keeps running at this limit constantly. The speed limit must be set according to the load conditions.

☆ Related parameters:

Para.	Name	Value Range	Unit	Function	Setting Condition	Effective Time	Default
H07-17	Speed limit source	0: Internal speed limit 1: V-LMT as external speed limit 2: Value of H07-19 or H07-20 used as internal speed limit through DI	-	Selects the speed limit source in the torque control mode.	Immediately	During operation	0

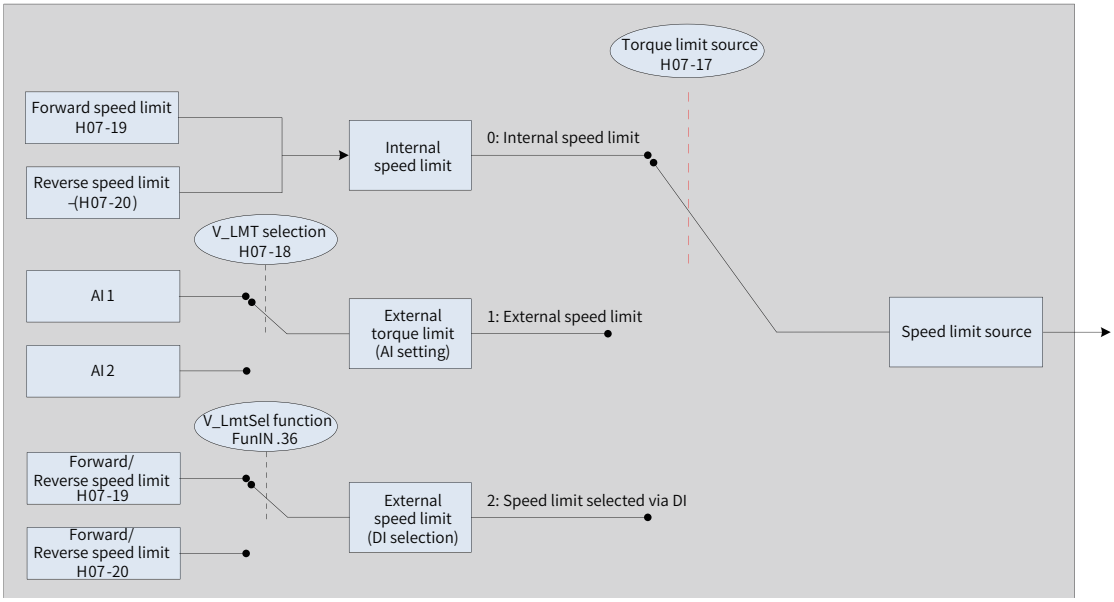

Figure 5-95 Speed limit source

1) H07-17 set to 0: Internal speed limit

The speed limit in different motor directions is determined by H07-19 and H07-20.

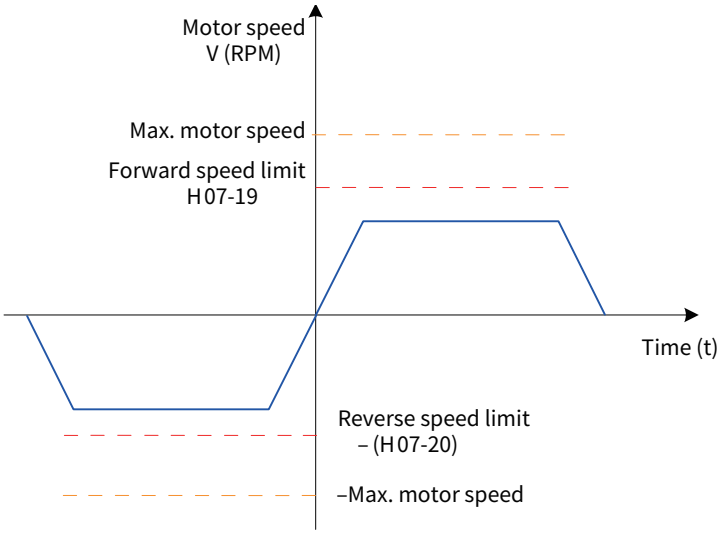

Table 5-27 Speed limit curve when H07-17 set to 0

2) H07-17 set to 1: External speed limit

The voltage for speed limit is input from the AI terminal set in H07-18. When the speed limit corresponding to the AI voltage is smaller than the internal speed limit (H07-19 or H07-20), the speed limit corresponding to the AI voltage is valid. When the speed limit corresponding to the AI voltage is greater than the internal speed limit (H07-19 or H07-20), the internal speed limit is valid.

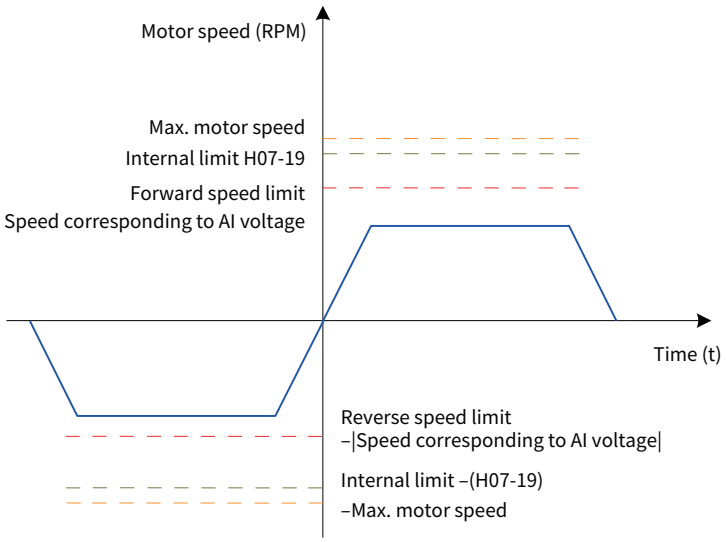

Figure 5-96 Speed limit curve when H07-17 set to 1

3) H07-17 set to 2: speed limit selected via DI

H07-19 or H07-20 is selected as the positive/negative speed limit based on the logic of the DI signal.

To use this function, assign a DI terminal of the servo drive with FunIN.36 (V-LmtSel, internal speed limit source) and set the terminal logic.

☆ Related function code:

Function No.	Name	Function Name	Description
FunIN.36	V_LmtSel	Internal speed limit source	Invalid: H07-19 used as internal positive/negative speed limit Valid: H07-20 used as internal positive/negative speed limit

Table 5-28 Speed limit description

V_LmtSel	
OFF	ON

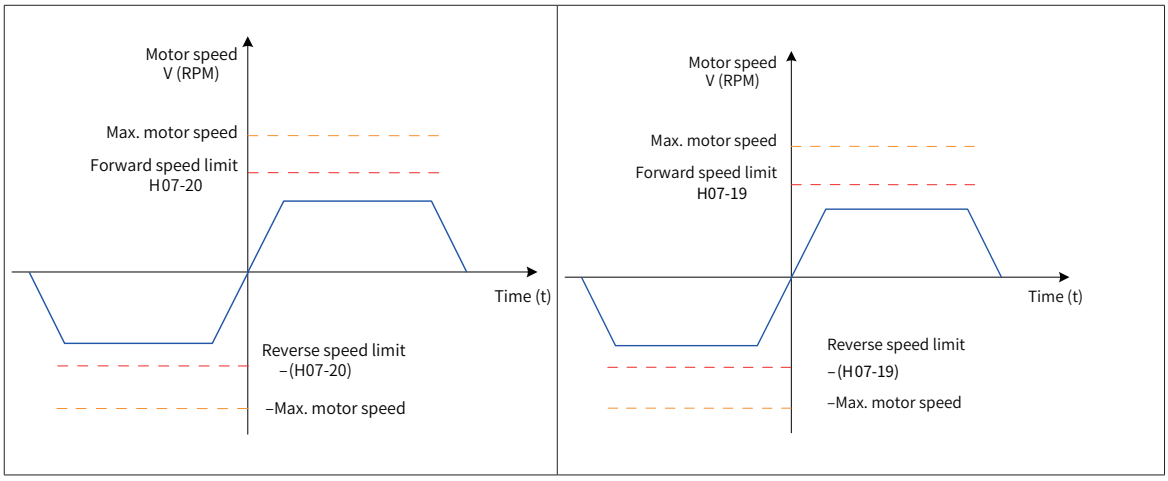

☆ Related parameters:

Para.	Name	Value Range	Unit	Function	Setting Condition	Effective Time	Default
H07-18	V-LMT selection	1-AI1 2-AI2	-	Selects the analog input channel when V-LMT is used as the speed limit source.	Immediately	During operation	1
H07-19	Positive speed limit/ Speed limit 1 in the torque control mode	0 to 6000	RPM	Sets the positive speed limit/ speed limit 1 in the torque control mode.	Immediately	During operation	3000
H07-20	Negative limit/Speed limit 2 in the torque control mode	0 to 6000	RPM	Sets the negative speed limit/ speed limit 2 in the torque control mode.	Immediately	During operation	3000

2 Setting the speed limit DO source

In the torque mode, when the absolute value of the actual motor speed exceeds the speed limit for the time of H07-40, the servo drive regards that the motor speed is limited and outputs the speed limit signal (FunOUT.8: V-LT) to the host controller. If any of the conditions is not met, the speed limit signal is inactive.

The speed limit signal (FunOUT.8: V-LT) is judged only in the torque control mode and servo running status.

Assign a DO terminal of the servo drive with FunOUT.8 and set the terminal logic.

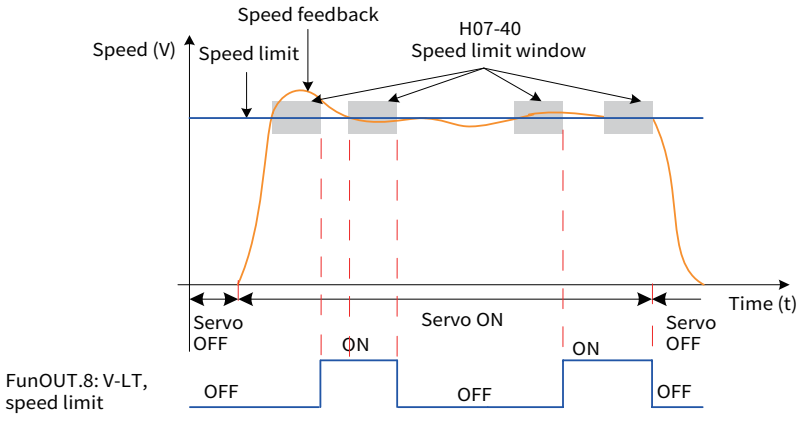

Figure 5-97 Example of speed limit DO waveform

☆ Related function code:

Function No.	Name	Function Name	Description
FunOUT.8	V-LT	Speed limit	Invalid: The motor speed does not each the speed limit. Valid: The motor speed reaches the speed limit and a speed loop is built internally based on the speed limit.

5.4.5 Torque Reached Output

This function is used to determine whether the actual torque reference reaches the setting range. When the actual torque reference reaches the threshold, the servo drive outputs the related DO signal (FunOUT.18: ToqReach, torque reached) to the host controller.

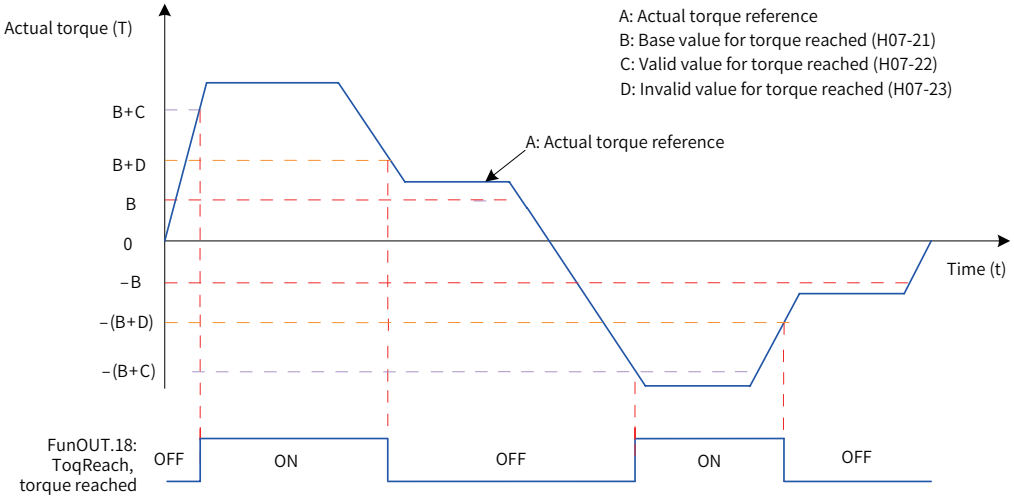

Figure 5-98 Example of torque reached output waveform

A: Actual torque reference (H0B-02)

B: Base value for torque reached (H07-21)

C: Valid value for torque reached (H07-22)

D: Invalid value for torque reached (H07-23)

C and D are offsets on the basis of B.

The torque reached DO signal becomes active when the actual torque reference meets the condition:

$$|A| \geqslant B + C$$

Otherwise, the torque reached DO signal remains inactive.

The torque reached DO signal becomes inactive when the actual torque reference meets the condition:

$$|A| < B + D$$

Otherwise, the torque reached DO signal remains active.

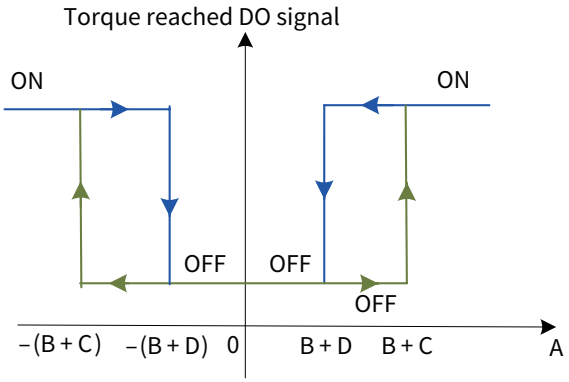

Figure 5-99 Torque reached output active description

☆ Related parameters:

Para.	Name	Value Range	Unit	Function	Setting Condition	Effective Time	Default
H07-21	Base value for torque reached	0 to 300.0	%	Sets the base value for torque reached (100% corresponds to the rated torque).	During operation	Immediately	0
H07-22	Valid value for torque reached	0 to 300.0	%	Sets the offset threshold for torque reached valid (100% corresponds to the rated torque).	During operation	Immediately	20.0
H07-23	Invalid value for torque reached	0 to 300.0	%	Sets the offset threshold for torque reached invalid (100% corresponds to the rated torque).	During operation	Immediately	10.0

To use the torque reached function, assign a DO terminal of the servo drive with function 18 (FunOUT.18: ToqReach, torque reached) and set the terminal logic.

☆ Related function code:

Function No.	Name	Function Name	Description
FunOUT.18	ToqReach	Torque reached	Valid: Absolute value of torque reference reaching the setpoint Invalid: Absolute value of torque reference smaller than the setpoint

5.4.6 Function Code Block Diagram of Torque Control Mode

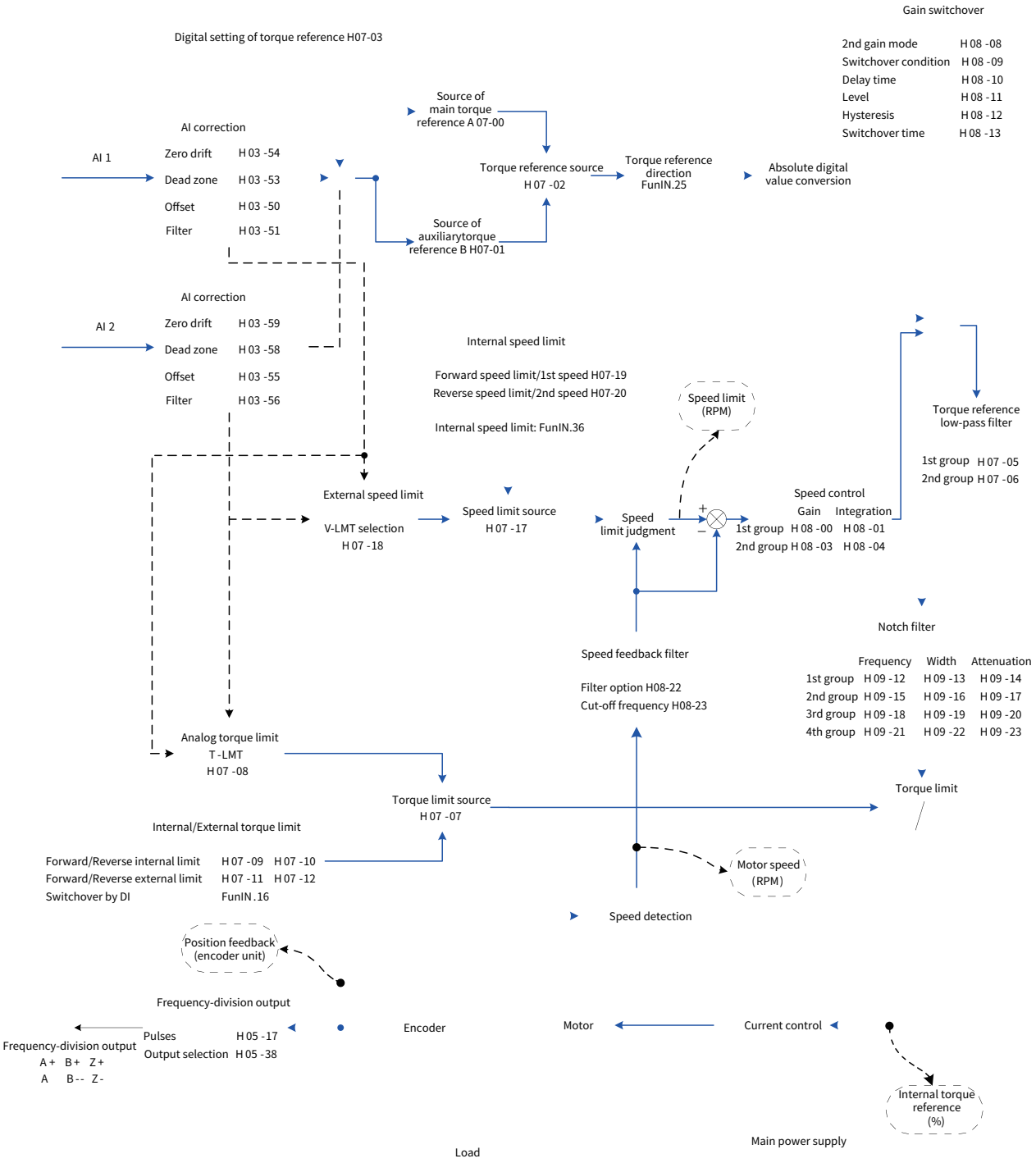

5.5 Hybrid Control Mode

The hybrid control mode means that the servo drive can switch between different control modes when the S-ON signal is active and the servo status is "run". Switchover between the following modes is supported:

- Torque mode ↔ Speed mode
- Speed mode ↔ Position mode
- Torque mode ↔ Position mode
- Speed mode ↔ Position mode ↔ Torque mode

Set H02-00 on the operating panel or Inovance software tool to switch between modes.

☆ Related parameters:

Para.	Name	Value Range	Function	Setting Condition	Effective Time	Default
H02-00	Control mode	0: Speed mode 1: Position mode 2: Torque mode 3: Torque mode ↔ Speed mode 4: Speed mode ↔ Position mode 5: Torque mode ↔ Position mode 6: Torque mode ↔ Speed mode ↔ Position mode 8: CANopen control mode (applicable to -CO models only)	Sets the control mode of the servo drive.	At stop	Immediately	1

Set the servo drive parameters in different control modes based on the mechanical structure and specifications. For details, see the description of *H02-00* in Chapter 7.

H02-00 set to 3/4/5: Assign a DI terminal of the servo drive with function 10 (FunIN.10: M1_SEL, mode switchover 1) and determine the activation logic of the DI terminal.
H02-00 set to 6: Assign two DI terminals of the servo drive with function 10 (FunIN.10: mode switchover 1) and function 11 (FunIN.11: mode switchover 2) and determine the activation logic of the DI terminals.

☆ Related function code:

<table>
<tr><th>Function No.</th><th>Name</th><th>Function Name</th><th>Function</th></tr>
<tr><td>FunIN.10</td><td>M1_SEL</td><td>Mode switchover 1</td><td>Used to switch the control modes when the servo drive status is "run".
<table>
<tr><th>H02-00</th><th>M1_SEL Terminal Logic</th><th>Control Mode</th></tr>
<tr><td rowspan="2">3</td><td>Inactive</td><td>Torque mode</td></tr>
<tr><td>Active</td><td>Speed mode</td></tr>
<tr><td rowspan="2">4</td><td>Inactive</td><td>Speed mode</td></tr>
<tr><td>Active</td><td>Position mode</td></tr>
<tr><td rowspan="2">5</td><td>Inactive</td><td>Torque mode</td></tr>
<tr><td>Active</td><td>Position mode</td></tr>
</table></td></tr>
<tr><td>FunIN.11</td><td>M2_SEL</td><td>Mode switchover 2</td><td>Used to switch the control modes when the servo drive status is "run".
<table>
<tr><th>H02-00</th><th>M2_SEL Terminal Logic</th><th>M1_SEL Terminal Logic</th><th>Control Mode</th></tr>
<tr><td rowspan="3">6</td><td></td><td>Active</td><td>Position mode</td></tr>
<tr><td>Active</td><td>Inactive</td><td>Speed mode</td></tr>
<tr><td>Inactive</td><td>Inactive</td><td>Torque mode</td></tr>
</table></td></tr>
</table>

5.6 Description of Absolute System

5.6.1 Overview

The absolute encoder consists of a detected designed to detect a position within one revolution and a cumulative revolution counter designed to detect the number of revolutions. Within 8388608 (2^{23}) resolution for single turn, the encoder can record data of 16-bit multi-turn data. The absolute system composed of the absolute encoder works in the absolute position linear mode or the absolute position rotation mode, and can be used in position, speed, and torque control modes of the servo drive. The system keeps data battery-backed at servo drive power-off and calculates the mechanical absolute position after servo drive power-on, and therefore repeat homing operation is not required.

When using the absolute encoder of the IS810P series servo drive, set H00-00 to 14101 (Inovance 23-bit absolute encoder) and set H02-01 (Absolute system selection) based on actual conditions. Er.731 (Encoder battery fault) is reported when the battery is connected for the first time. Set H0D-20 to 1 to reset the fault and perform the homing operation.

Note: When you change H02-02 (Rotation direction) or H0D-20 (Absolute encoder reset selection), an abrupt change occurs in the encoder absolute position, causing change of the absolute position reference. Therefore, you need to perform the homing operation. When the homing function is enabled, the servo drive automatically calculates the deviation between the mechanical absolute position and the encoder absolute position after homing is completed and stores the value in the EEPROM.

5.6.2 Relevant Parameter Setting

1 Absolute system setting

Set H00-00 to 14101 to select Inovance bit with 23-bit absolute encoder and select the absolute position mode in H02-01.

Para.	Name	Value Range	Function	Setting Condition	Effective Time	Default
H00-00	Motor SN	14000: Inovance motor with 20-bit incremental encoder 14101: Inovance motor with 23-bit absolute encoder	Selects the Inovance motor with 23-bit absolute encoder.	At stop	Next power-on	14000
H00-08	Absolute encoder type	14100: Multi-turn absolute encoder Others: Single-turn absolute encoder	Selects the absolute encoder type.	At stop	Next power-on	0
H02-01	Absolute system selection	0: Incremental position mode 1: Absolute position linear mode 2: Absolute position rotation mode	Selects the absolute position mode.	At stop	Next power-on	0

NOTE

◆ In the absolute position mode, the system automatically detects the motor SN to check whether the absolute encoder motor is used. If the setting is incorrect, Er.122 (Product model not matching the absolute position mode) is reported.

2 Absolute position linear mode

Para.	Name	Value Range	Function	Setting Condition	Effective Time	Default
H0B-07	Absolute position counter	-	Indicates the present absolute position (reference unit) of the motor in the position control mode.	At display	-	0

H0B-58	Mechanical absolute position (low 32 bits)	-	Displays position converted from the load position to the position at motor side in the absolute position linear mode or absolute position rotation mode.	At display	-	0
H0B-60	Mechanical absolute position (high 32 bits)	-		At display	-	0
H0B-77	Absolute position of absolute encoder (low 32 bits)	-	Displays the absolute position feedback from the absolute encoder.	At display	-	0
H0B-79	Absolute position of absolute encoder (high 32 bits)	-		At display	-	0

This mode is applicable to the scenario where the load travel range if fixed and the encoder multi-turn data does not overflow, for example, ball screw transmission machine.

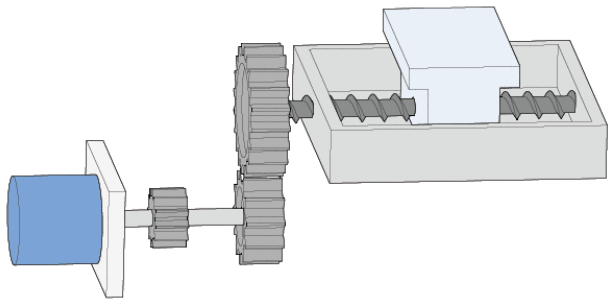

Figure 5-100 Diagram of ball screw transmission machine

Assume that the mechanical absolute position (H0B-58 and H0B-60) is P_M; the encoder absolute position is P_E [range: -2^{38} to + (2^{38} – 1)]; the position offset of the absolute position linear mode (H05-46 and H05-48) is P_O. Their relationship is $P_M = P_E - P_O$.

Assume that the electronic gear ratio is $\text{Electronic gear ratio } \frac{B}{A} = \frac{\text{Encoder resolution}}{\text{H05-02}}$ and the mechanical absolute position (reference unit) is H0B-07, then H0B-07 = P_M /($\text{Electronic gear ratio } \frac{B}{A} = \frac{\text{Encoder resolution}}{\text{H05-02}}$).

The position offset of the absolute position linear mode (H05-46 and H05-48) is 0 by default. If the homing operation is performed, the servo drive automatically calculates the deviation between the encoder absolute position and the mechanical absolute position, grants values to H05-46 and H05-48, and stores the values in EEPROM.

The encoder multi-turn data range of the absolute position linear mode is –32768 to +32767. If the number of forward revolutions is greater than +32767 or the number of reverse revolutions is smaller than –32768, the Er.735 is reported, indicating that the encoder multi-tun overflow fault. Set HThe value range of H09-01 (Rigidity level) is 0 to 31. The level 0 indicates the weakest rigidity0A-36 to shield this fault.

3 Absolute position rotation mode

Para.	Name	Value Range	Unit	Function	Setting Condition	Effective Time	Default
H05-50	Mechanical gear ratio in absolute position rotation mode (numerator)	1 to 65535	1	Sets the gear ratio between the load and the motor mechanical transmission in the absolute position rotation mode. It is valid when both H05-52 and H05-53 are 0.	At stop	Immediately	65535
H05-51	Mechanical gear ratio in absolute position rotation mode (denominator)	1 to 65535	1		At stop	Immediately	1
H05-52	Pulses per load revolution in absolute position rotation mode (encoder unit, low 32 bits)	0 to 4294967295	Encoder unit	Defines the number of pulses per revolution of the rotary load in the absolute position rotation mode.	At stop	Immediately	0
H05-53	Pulses per load revolution in absolute position rotation mode (encoder unit, high 32 bits)	0 to 127	Encoder unit		At stop	Immediately	0
H0B-58	Mechanical absolute position (low 32 bits)	-	Encoder unit	Displays position converted from the load position to the position at motor side in the absolute position linear mode or absolute position rotation mode.	At display	-	0
H0B-60	Mechanical absolute position (high 32 bits)	-	Encoder unit		At display	-	0
H0B-77	Absolute position of absolute encoder (low 32 bits)	-	Encoder unit	Displays the absolute position feedback from the absolute encoder.	At display	-	0
H0B-79	Absolute position of absolute encoder (high 32 bits)	-	Encoder unit		At display	-	0
H0B-81	Single-turn position of the rotating load (low 32 bits)	-	Encoder unit	Sets the motor position converted from the rotating load single-turn position in the absolute position rotation mode.	At display	-	0
H0B-83	Single-turn position of the rotating load (high 32 bits)	-	Encoder unit		At display	-	0
H0B-85	Single-turn position of the rotating load	-	Reference unit	Sets the rotating load single-turn position in the absolute position rotation mode.	At display	-	0

This mode is applicable to the scenario where the load travel is not limited and the number of motor single-direction revolutions is smaller than 32767, as shown in the following figure.

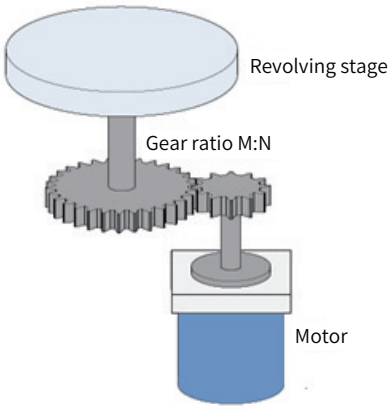

Figure 5-101 Rotating load

The servo drive calculates the mechanical absolute position based on H05-52 and H05-54. If both H05-52 and H05-54 are 0, the servo drive calculates the mechanical absolute position based on H05-50 and H05-51. Assume that the encoder resolution R_E is 223 and the encoder pulses within one revolution of the load is R_M. When H05-52 or H05-54 is not 0, R_M = H05-54 c 232 + H05-52. When both H05-52 and H05-54 are 0, $R_M = R_E \times \frac{H0550}{H0551} - 1$.

Assume that the electronic gear ratio is $\text{Electronic gear ratio } \frac{B}{A} = \frac{\text{Encoder resolution}}{H05\text{-}02}$ and the mechanical absolute position (reference unit) is H0B-07, then H0B-07 = P_M /($\text{Electronic gear ratio } \frac{B}{A} = \frac{\text{Encoder resolution}}{H05\text{-}02}$).

The following figure shows the relationship between the rotating load single-turn position and the revolving stage position.

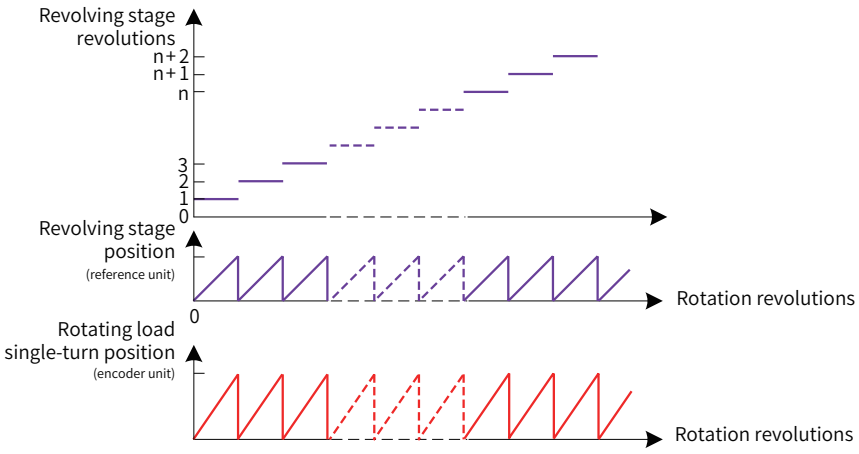

Figure 5-102 Relationship between the rotating load single-turn position and the revolving stage position

The following figure shows the relationship between the encoder feedback position and the rotating load single-turn position:

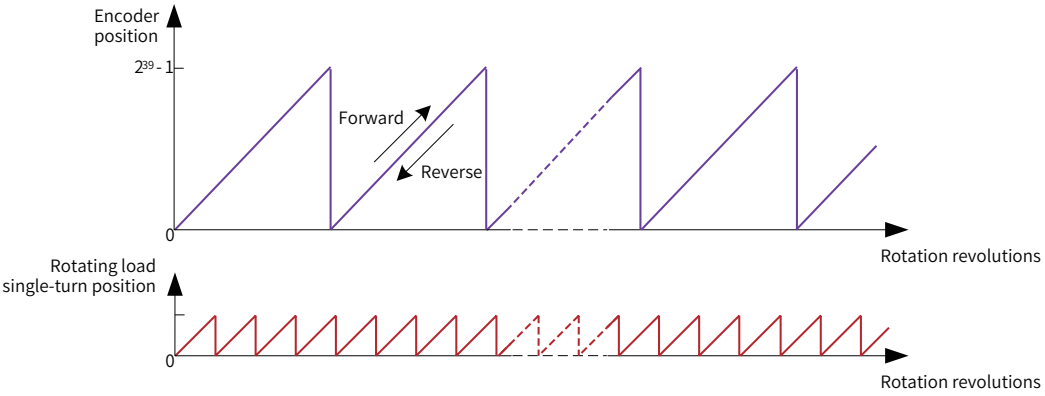

Figure 5-103 Relationship between the encoder feedback position and the rotating load single-turn position

The multi-turn data range is not limited in the absolute position rotation mode and Er.735 can be shielded.

4 Encoder feedback data

The encoder feedback data can be divided into encoder revolutions and position of the encoder within one turn. The encoder revolution data feedback is not available in the incremental position mode.

Para.	Name	Value Range	Unit	Function	Setting Condition	Effective Time	Default
H0B-70	Number of absolute encoder revolutions	-	r	Displays the number of absolute encoder revolutions.	At display	-	0
H0B-71	Position of the absolute encoder within one turn	-	Encoder unit	Displays the absolute position feedback from the absolute encoder within one turn.	At display	-	0

5 Encoder multi-turn overflow fault selection

In the absolute position linear mode, set H0A-36 to shield the encoder multi-turn overflow fault.

Para.	Name	Value Range	Unit	Function	Setting Condition	Effective Time	Default
H0A-36	Encoder multi-turn overflow fault selection	0: Not hide 1: Hide	-	Sets whether to shield the encoder multi-turn overflow fault.	At stop	Immediately	0

6 Encoder reset selection

Set H0D-20 to determine whether to reset the encoder internal faults and encoder feedback multi-turn data.

Para.	Name	Value Range	Unit	Function	Setting Condition	Effective Time	Default
H0D-20	Absolute encoder reset selection	0: No operation 1: Reset faults 2: Reset faults and multi-turn data	-	Sets whether to reset the encoder internal faults and encoder feedback multi-turn data.	At stop	Immediately	0

NOTE

◆ When you set H0D-20 to 2 and the faults and multi-turn data are reset, an abrupt change occurs in the encoder absolute position, and you need to perform the homing operation.

5.6.3 Precautions for Battery Box of Absolute System

Er.731 (Encoder battery fault) is reported when the battery is connected for the first time. Set H0D-20 to 1 to reset the fault and perform the homing operation.

When the detected battery voltage is smaller than 3.0 V, Er.730 (Encoder battery warning) occurs. Replace the battery as follows:

- Step 1: Power on the servo drive and make it enter a non-running state.
- Step 2: Replace the battery.
- Step 3: The servo drive automatically resets Er.730. If there is no other warning, the servo drive runs normally.

NOTE

◆ When the servo drive is powered off, if you replace the battery and power on the servo drive again, Er.731 is reported and an abrupt change occurs in the multi-turn data. Set H0D-20 to 1 to reset the fault and perform the homing operation again.

◆ During power-off the servo drive, ensure that the maximum motor speed does not exceed 6000 RPM, so that the encoder position can be recorded correctly.

◆ Store the encoder under required ambient temperature and with its battery securely connected and adequately charged. Failure to comply may cause the encoder to lose the position information.

5.6.4 Soft Limit Function

Traditional hardware limit function: This function is implemented by inputting the external sensor signal to the CN1 terminal of the servo drive.

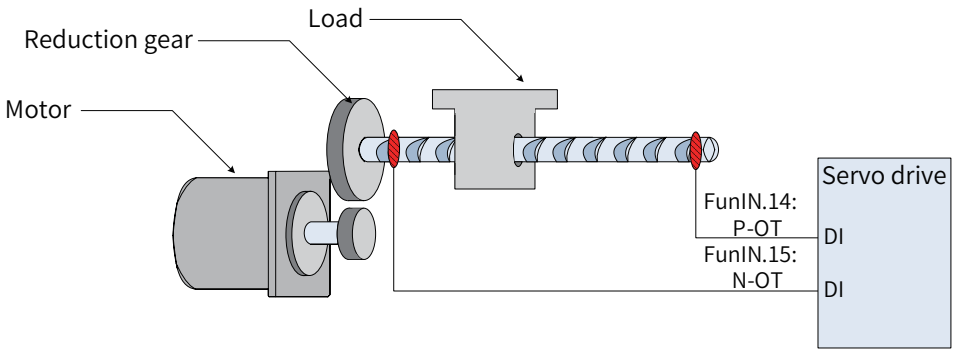

Figure 5-104 Installation of limit switches

Soft limit function: The servo drive compares the internal position feedback with the limit position, and alarms and stops when determining that the motor exceeds the limit position. This function is applicable in both the absolute position mode and incremental position mode. In the incremental position mode, set H0A-40 to 2, and the servo drive performs homing to find the mechanical home after power-on and

then enables the soft limit function.

1 Comparison between traditional hardware limit function and soft limit function

Traditional Hardware Limit Function		Soft Limit Function	
1	Restricted to linear movement and single-turn rotation movement.	1	Applicable to both linear movement and rotation movement.
2	External mechanical limit switch required	2	Hardware not required, eliminating malfunction due to peer cable contact
3	Cannot judge mechanical slip	3	Preventing mechanical slip and abnormal action with internal position comparison
4	Cannot judge or alarm machine out of limit position after power-off		

2 Parameters of soft limit function

Para.	Name	Value Range	Unit	Function	Setting Condition	Effective Time	Default
H0A-40	Soft limit function	0: Disabled 1: Enabled immediately after power-on 2: Enabled after homing	1	Determines whether to enable the soft limit function.	At stop	Immediately	0
H0A-41	Max. absolute position limit	–2147483648 to +2147483647	Reference unit	Specifies the maximum absolute position limit for the soft limit function.	At stop	Immediately	2147483647
H0A-43	Min. absolute position limit	–2147483648 to +2147483647	Reference unit	Specifies the minimum absolute position limit for the soft limit function.	At stop	Immediately	–2147483648

- When H0A-40 is set to 0, the soft limit function is disabled.
- When H0A-40 is set to 1, the soft limit function is enabled immediately after the servo drive is powered on. When the absolute position counter (H0B-07) is greater than the value of H0A-41, the servo drive reports the warning Er.950 and stops at the forward limit. When the absolute position encounter (H0B-07) is smaller than the value of H0A-43, the servo drive reports the warning Er.952 and stops at the reverse limit.
- When H0A-40 is set to 2, the soft limit function is enabled after homing at power on. When the absolute position counter (H0B-07) is greater than the value of H0A-41, the servo drive reports the warning Er.950 and stops at the forward limit after homing. When the absolute position encounter (H0B-07) is smaller than the value of H0A-43, the servo drive reports the warning Er.952 and stops at the reverse limit after homing.
- When H0A-41 is smaller than H0A-43, the values of these two parameters are exchanged.

5.7 Auxiliary Functions

The servo drive provides the following auxiliary functions to ensure proper running of the servo system.

5.7.1 Software Reset

When a fault (not No.1 non-resettable fault) occurs in the non-running state, the servo drive needs to be powered off and then on again but the field does not permit power-off. In this case, you can use the software reset function.

☆ Related parameters:

Para.	Name	Value Range	Function	Setting Condition	Effective Time	Default
H0D-00	Software reset	0: No operation 1: Enabled	Programs in the servo drive are reset automatically (similar to the program reset upon power-on) after the software reset function is enabled, without the need for a power cycle.	At stop	Immediately	0

5.7.2 Motor Protection

1 Motor overload protection

After the servo motor is energized, it generates heat and releases it to the surrounding environment due to the thermal effect of current. The servo drive provides motor overload protection to protect the motor against damage due to high temperature when the heat generated exceeds the heat released.

Set the motor overload protection gain (H0A-04) to adjust the report time of the fault Er.620 (Motor overload fault). Use the default value of H0A-04 in general conditions. However, when one of the following conditions occurs, modify H0A-04 based on actual motor temperature:

- The servo motor operates in environments with high temperature.
- The servo motor is in cyclic motion featuring a short motion cycle and frequent acceleration/deceleration.

You can set H0A-26 to 1 to shield motor overload detection when you ensure that the motor will not be damaged.

CAUTION	
	◆ Take caution when using the motor overload shielding function as it may easily lead to motor damage.

☆ Related parameters:

Para.	Name	Value Range	Unit	Function	Setting Condition	Effective Time	Default
H0A-04	Motor overload protection gain	50 to 300	%	Determines the motor overload duration before Er.620 is reported.	At stop	Immediately	100
H0A-26	Motor overload shielding	0: Not shield 1: Shield	-	Sets whether to shield the motor overload fault (Er.620) and motor overload warning (Er.909) functions.	At stop	Immediately	0

2 Locked rotor over-temperature protection

The servo drive provides over-temperature protection to protect the motor against damage due to high temperature caused by serious motor heating when the duration of rotor locked (the motor speed is almost 0 and the actual current is very large) exceeds the allowable time.

Set the time threshold for locked rotor over-temperature protection (H0A-32) to adjust the report time of Er.630. Set H0A-33 to determine whether to enable the protection function (enabled by default).

CAUTION	
	◆ Take caution when determine whether to shield the motor locked rotor over-temperature protection as it may easily lead to motor damage.

☆ Related parameters:

Para.	Name	Value Range	Unit	Function	Setting Condition	Effective Time	Default

H0A-32	Time window of locked rotor over-temperature protection	10 to 65535	ms	Sets the duration time of Er.630 before it is detected by the servo drive.	During operation	Immediately	200
H0A-33	Locked rotor over-temperature protection	0: Shield detection 1: Enable detection	-	Defines whether to enable the detection for Er.630.	During operation	Immediately	1

1) Motor overspeed protection

A very large motor speed causes damage to the motor or machine. The servo drive provides motor overspeed protection.

$$\text{Overspeed threshold} = \begin{cases} \text{Max. motor speed} \times 1.2 & \text{H0A-08} = 0 \text{ or H0A-08} > \text{Max. motor speed} \times 1.2 \\ \text{H0A-08} & \text{H0A-08} \neq 0 \text{ and H0A-08} < \text{Max. motor speed} \times 1.2 \end{cases}$$

CAUTION

◆ The servo drive also provides runaway protection to prevent the situation where the motor is out of control and stall occurs.

◆ In the applications where the motor drives vertical axis or is driven by load, set H0A-12 to 0 to disable runaway fault detection. Use this setting with caution.

☆ Related parameters:

Para.	Name	Value Range	Unit	Function	Setting Condition	Effective Time	Default
H0A-08	Overspeed threshold	0 to 10000	RPM	Sets the motor speed threshold at which Er.500 (Runaway fault) is detected.	During operation	Immediately	0
H0A-12	Runaway protection selection	0: Disabled 1: Enabled	-	Defines whether to enable runaway protection.	During operation	Immediately	1

Besides runaway protection, the servo drive allows you to set the speed limit in the speed control mode and torque control mode to protect the motor and machine.

5.7.3 DI Filter Time

The servo drive provides nine DI terminals, in which DI1 to DI7 are low-speed DI terminals and DI8 and DI9 are high-speed DI terminals.

The following table describes the signal logic of low-speed DI terminals.

Table 5-29 Signal logic of low-speed DI terminals

Value	Terminal Logic When DI Function Valid	Diagram

0	Low level	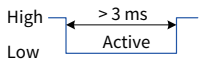
1	High level	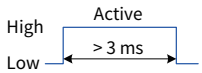
2	Rising edge	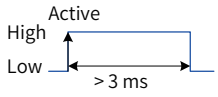
3	Falling edge	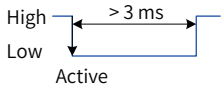
4	Rising edge and falling edge	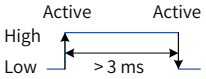

The following table describes the signal logic of high-speed DI terminals.

Table 5-30 Signal logic of high-speed DI terminals

Value	Terminal Logic When DI Function Valid	Diagram
0	Low level	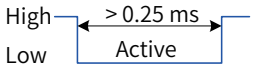
1	High level	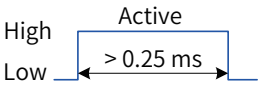
2	Rising edge	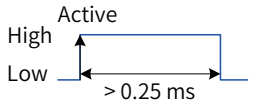
3	Falling edge	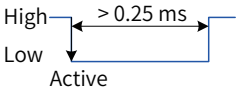
4	Rising edge and falling edge	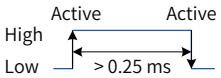

1 S-ON signal filter setting

Assign a DI terminal (hardware DI or VDI) within function 1 (FunIN1: S-ON, servo ON).

If signal interference exists in this terminal, set the filter in H02-18. Note that the time width of the S-ON signal must be greater than (H02-18) + 3 ms. Otherwise, the signal is inactive.

2 High-speed DI terminal filter setting

The servo drive provides two high-speed DI terminals, with a maximum frequency of 4 kHz. Set the filter of these two terminals in H0A-19 and H0A-20 when there is signal interference.

☆ Related parameters:

Para.	Name	Value Range	Unit	Function	Setting Condition	Effective Time	Default
H02-18	S-ON filter time constant	0 to 64	ms	Sets the filter time constant of the S-ON signal.	At stop	Immediately	0
H0A-19	DI8 filter time constant	0 to 255	25 ns	Sets the filter time constant of the high-speed DI8 terminal.	At stop	Next power-on	80
H0A-20	DI9 filter time constant	0 to 255	25 ns	Sets the filter time constant of the high-speed DI9 terminal.	At stop	Next power-on	80

5.7.4 Brake Protection Detection Function

In the scenario where the motor with brake is used for gravity load, if the input reference is 0 and the speed is lower than 10 RPM after the Z-shaft servo is enabled, the servo drive reports the fault Er.625 after detecting that the torque of the servo motor remains smaller than 70% of the gravity load for 200 ms with the initial 500 ms running. This indicates that the brake is not released properly.

The servo drive detects whether the brake is actually closed after issuing the brake apply command. If detecting that the motor rotates for two revolutions after the brake close command is issued, the servo drive reports the warning Er.626.

Set H0D-24 to 1 to enable the Z-shaft gravity load auto-tuning function. After auto-tuning is successful, the value of H0D-24 is restored to 0. The auto-tuning conditions are:
The S-ON signal is switched on and the brake is released.
The input reference remains 0 and the speed remains smaller than 10 RPM for 128 ms.
The auto-tuning results are stored in H0A-48.

☆ Related parameters:

Para.	Name	Value Range	Unit	Function	Setting Condition	Effective Time	Default
H0A-47	Brake protection detection function	0: Disabled 1: Enabled	-	Sets whether to enable the brake protection detection function.	During operation	Immediately	0
H0A-48	Detected gravity load value	0 to 300.0	%	Displays the detected gravity load. You can also set this parameter manually.	During operation	Immediately	30.0
H0D-24	Gravity load auto-tuning	0: Disabled 1: Enabled	-	Sets whether to enable the gravity load auto-tuning function.	During operation	Immediately	0

Chapter 6 Adjustment

6.1 Overview

The servo drive is required to run the motor with minimal delay and maximum accuracy according to commands from the host controller or internal setting. For this purpose, servo gain must be adjusted accordingly.

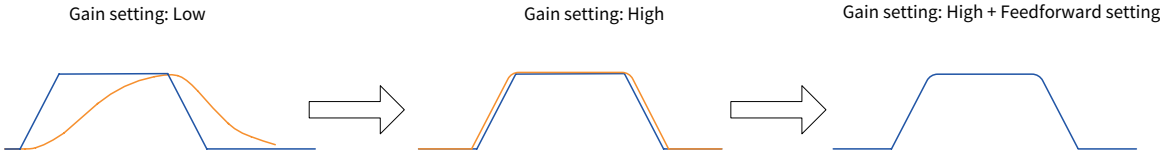

Figure 6-1 Gain setting example

Position loop gain: 40.0 Hz	Position loop gain: 200.0 Hz	Position loop gain: 200.0 Hz
Speed loop gain: 200.0 Hz	Speed loop gain: 25.0 Hz	Speed loop gain: 25.0 Hz
Speed loop integral time constant: 100.00 ms	Speed loop integral time constant: 50.00 ms	Speed loop integral time constant: 50.00 ms
Speed feedforward gain: 0	Speed feedforward gain: 0	Speed feedforward gain: 50.0%
Load inertia ratio: 30	Load inertia ratio: 30	Load inertia ratio: 30

Servo gain can be adjusted by setting multiple parameters that affect each other, including position loop gain, speed loop gain, filter, and load moment of inertia ratio. Ensure that these parameters are balanced during adjustment.

CAUTION	
	◆ Before gain tuning, perform jogging and ensure that the motor can run normally.

The following figure shows the general flowchart for gain tuning.

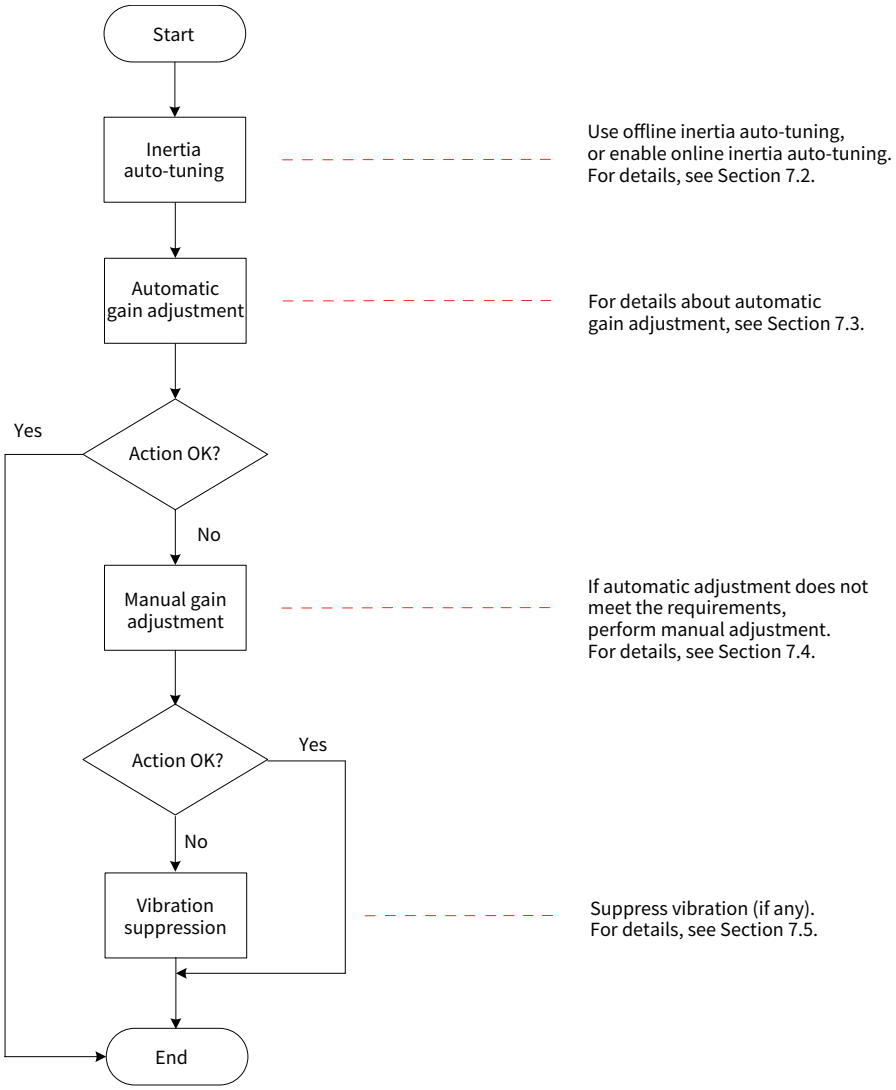

Figure 6-2 Step

Table 6-1 Description of gain tuning

Step			Function	Reference
1	Inertia auto-Tuning	Offline	The servo drive calculates the load inertia ratio automatically through inertia auto-tuning.	6.2.1
		Online	The host controller sends a command to make the motor rotate, and the servo drive calculates the load inertia ratio in real time.	6.2.2
2	Automatic gain adjustment		The servo drive generates a group of gain parameters based on the correct inertia ratio.	6.3

3	Manual gain adjustment	Basic parameters	When automatic gain adjustment cannot produce satisfactory results, manually fine-tune the gain to achieve better result.	6.4.1
		Reference filter	Filter the pulse input, position reference, and analog input.	6.4.3
		Feedforward gain	Improves the follow-up behavior.	6.4.4
		PDFF control	Adjusts the speed loop control mode to improve the anti-interference capability at high/low frequency range.	6.4.5
		Torque disturbance observer	Improves the resistance against torque disturbance.	6.4.6
4	Vibration suppression	Suppression of mechanical resonance	Suppresses mechanical resonance through the notch.	6.6.1
		Suppression of low-frequency resonance	Activates the filter used to suppress low-frequency resonance.	6.6.2

6.2 Inertia Auto-Tuning

The load inertia ratio (H08-15) is calculated through the following formula:

$$\text{Load inertia ratio} = \frac{\text{Total rotational inertia of mechanical load}}{\text{Motor rotor inertia}}$$

The load inertia ratio is a critical parameter of the servo system. A correct load inertia ratio facilitates commissioning.

You can set the load inertia ratio manually or get the inertia ratio through inertia auto-tuning.

The following two inertia auto-tuning modes are available:

1 Offline inertia auto-tuning

To enable offline inertia auto-tuning, use H0D-02 (Offline inertia auto-tuning) and make the motor rotate and execute inertia auto-tuning through the operating panel. Offline inertia auto-tuning does not involve the host controller.

2 Online inertia auto-tuning

Send a command to the servo drive through the host controller to make motor act accordingly to finish inertia auto-tuning. Online inertia auto-tuning involves the host controller.

CAUTION	
	◆ The following requirements must be met to ensure correct calculation of the load inertia ratio: ◆ The actual maximum motor speed is greater than 150 RPM. ◆ The actual acceleration rate during acceleration/deceleration is higher than 3000 RPM/s. ◆ The load torque is stable, without dramatic change. ◆ The actual load inertia ratio does not exceed 120. ◆ If the actual load inertia ratio is very large and the drive gain is low, motor action will be slow, which cannot meet the requirements for maximum motor speed and actual acceleration rate. In this case, increase the speed loop gain in H08-00 and perform inertia auto-tuning again. ◆ If vibration occurs during auto-tuning, stop auto-tuning immediately and decrease the gain. ◆ The inertia auto-tuning may fail when the backlash of the transmission mechanism is large.

6.2.1 Offline Inertia Auto-Tuning

Before offline inertia auto-tuning, confirm the following items:

1) The motor's movement travel meets the following two requirements:

2) The movement travel of above one resolution is reserved in the forward and reverse directions each between the mechanical limit switches.

The limit switches have been installed and the required movement travel is reserved to prevent overtravel which may cause accidents during auto-tuning.

3) The requirements of H09-09 (Number of motor revolutions per inertia auto-tuning) are met.

View the current values of H09-06 (Maximum speed for inertia auto-tuning), H09-07 (Time constant for accelerating to the maximum speed during inertia auto-tuning), and H09-09. Ensure that the movement travel of the motor at the stop position is greater than the value of H09-09; otherwise, decrease H09-06 or H09-07 until the requirements are met.

4) Estimate the value of H08-15 (Load inertia ratio).

When H08-15 is set to 1.00 (default value) but the actual load inertia ratio is greater than 30.00, the motor runs slowly, resulting in inertia auto-tuning failure. In this case, take the following measures:

a) Set H08-15 to a larger value.

The recommended initial value of H08-15 is 5.00. Increase the value gradually until the value displayed on the operating panel is updated accordingly.

b) Appropriately increase the value of H09-01 (Rigidity level) to allow the actual motor speed to reach the value of H09-06 (Maximum speed for inertia auto-tuning).

The following figure shows the offline inertia auto-tuning procedure.

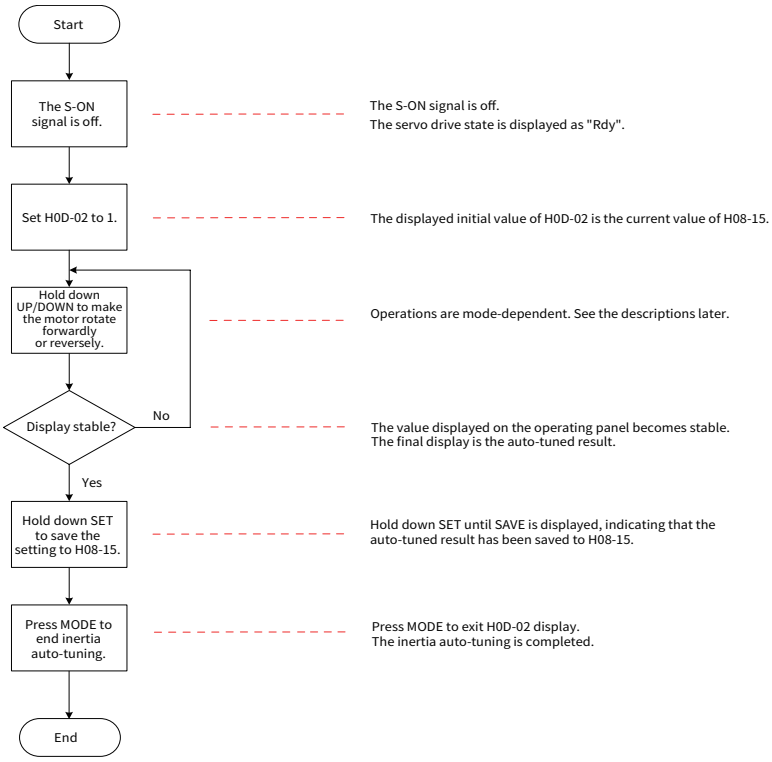

Figure 6-3 Offline inertia auto-tuning flowchart

The system supports two offline inertia auto-tuning modes: positive and negative triangle wave mode and JOG mode. The two modes have different reference forms, as shown in the following table.

Table 6-2 Mode comparison

Item	Positive and Negative Triangle Wave Mode (H09-05 Set to 0)	JOG Mode (H09-05 Set to 1)
Reference form	Symmetrical triangle wave 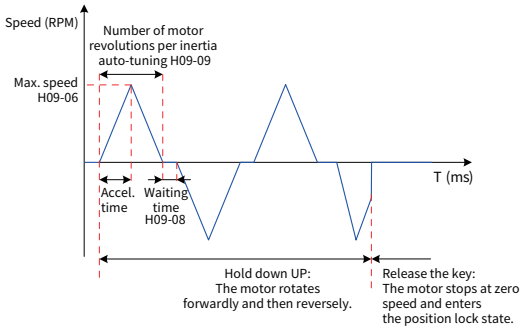	Trapezoidal wave 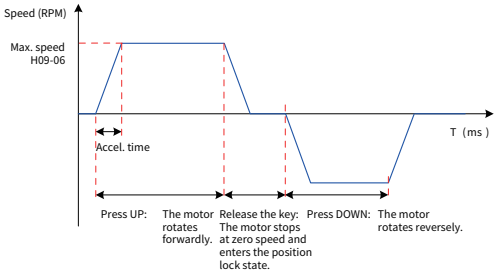
Max. speed	H09-06	H09-06
Accel./ Decel. time	H09-07	H09-07
Key operation	Hold down the UP key: The motor runs forwardly and then reversely. Hold down the DOWN key: The motor runs reversely and then forwardly. Release the key: The motor stops at zero speed and enters the position lock state.	Press the UP key: The motor runs forwardly. Press the DOWN key: The motor runs reversely. Release the key: The motor stops at zero speed and enters the position lock state.
Interval	H09-08	The interval between two key operations
Motor revolutions	⩽ H09-09	Manually set
Applicable scenario	The motor travel is short.	The motor travel is long and can be manually controlled.

☆ Related parameters:

Para.	Name	Value Range	Unit	Function	Setting Condition	Effective Time	Default
H09-05	Offline inertia auto-tuning mode	0: Positive/Negative triangle wave mode 1: JOG mode	-	Sets the offline inertia auto-tuning mode.	At stop	Immediately	0
H09-06	Max. speed of inertia auto-tuning	100 to 1000	RPM	Sets the maximum speed reference for offline inertia auto-tuning.	At stop	Immediately	500

H09-07	Time constant for accelerating to the maximum speed during inertia auto-tuning	20 to 800	ms	Defines the time for the motor to accelerate from 0 RPM to the maximum speed of inertia auto-tuning (H09-06) during offline inertia auto-tuning.	At stop	Immediately	125
H09-08	Inertia auto-tuning interval	50 to 10000	ms	Defines the interval time between two consecutive speed references when H09-05 (Offline inertia auto-tuning mode) is set to 1 (Positive/Negative triangular wave mode).	At stop	Immediately	800
H09-09	Number of motor revolutions per inertia auto-tuning	-	r	Sets the number of motor revolutions for offline inertia auto-tuning when H09-05 is set to 1.	-	-	250

6.2.2 Online Inertia Auto-Tuning

The servo drive supports online inertia auto-tuning. The online inertia auto-tuning flowchart is shown as follows.

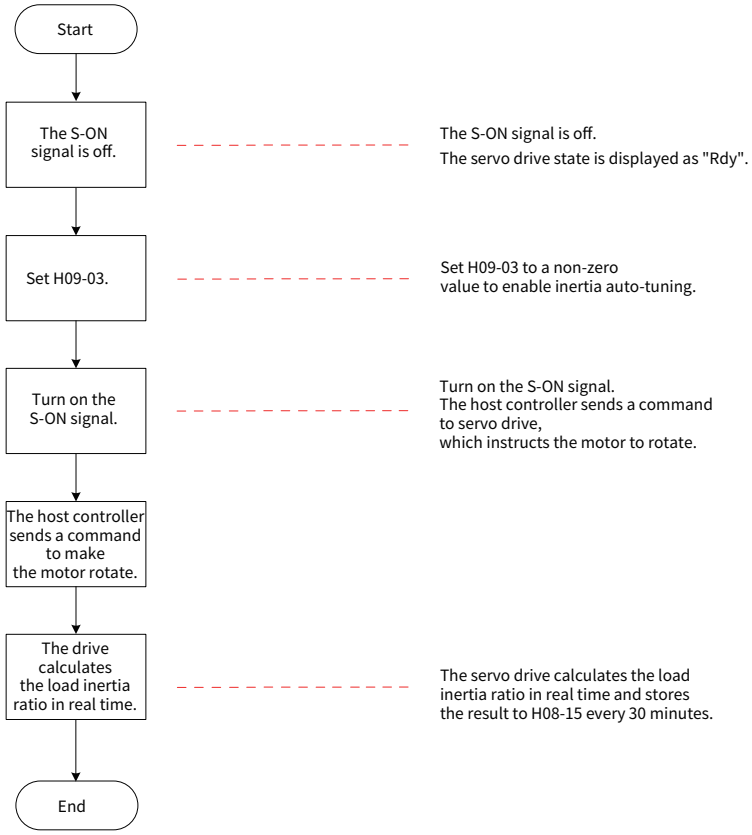

Figure 6-4 Online inertia auto-tuning flowchart

NOTE

◆ Different H09-03 values indicate different updating speeds of the load inertia ratio in H08-15.

◆ H09-03 set to 1: Applicable to the scenario where the actual load inertia ratio rarely changes, such as machine tool and wood carving machine.

◆ H09-03 set to 2: Applicable to the scenario where the actual load inertia ratio changes slowly.

◆ H09-03 set to 3: Applicable to the scenario where the actual load inertia ratio changes rapidly, such as transportation manipulator.

☆ Related parameters:

Para.	Name	Value Range	Unit	Function	Setting Condition	Effective Time	Default
H09-03	Online inertia auto-tuning mode	0: Online auto-tuning disabled 1: Online auto-tuning enabled, changing rarely 2: Online auto-tuning enabled, changing slowly 3: Online auto-tuning enabled, changing quickly	-	Sets the online inertia auto-tuning mode.	During operation	Immediately	0

6.3 Automatic Gain Adjustment

Automatic gain adjustment means that the servo drive automatically generates the matching gain parameters based on the setting of H09-01 (Rigidity level) to achieve fast response and stability.

CAUTION

◆ Ensure that the correct load inertia ratio has been obtained before enabling automatic gain adjustment.

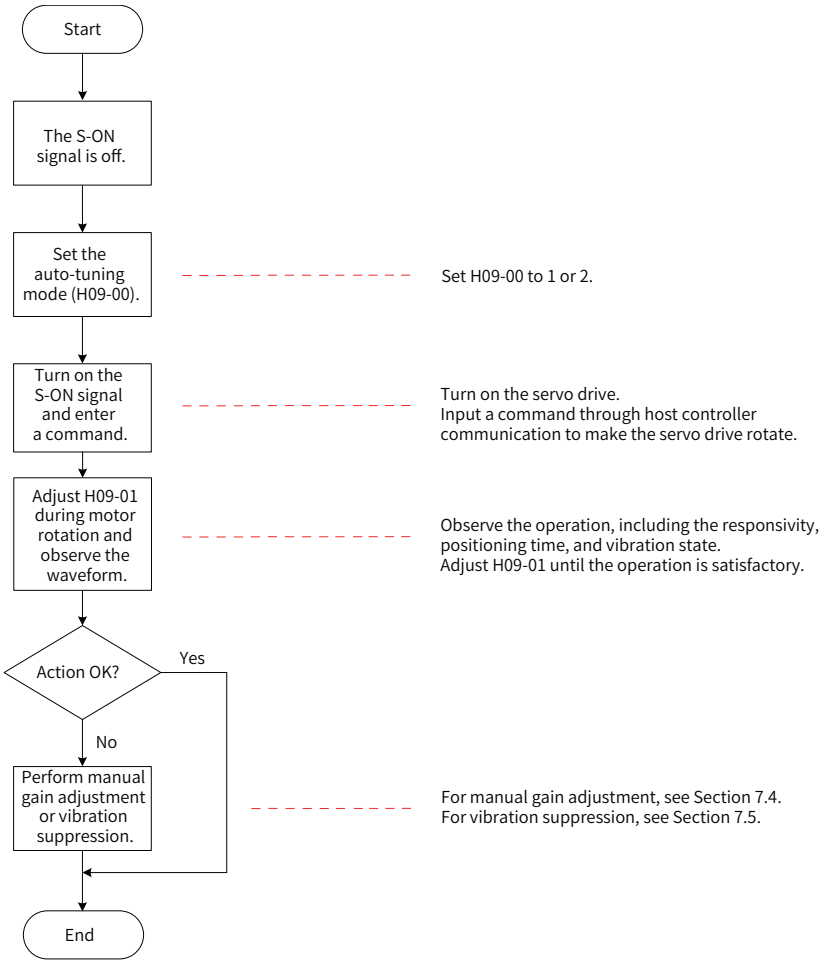

Figure 6-5 Automatic gain adjustment flowchart

The value range of H09-01 (Rigidity level) is 0 to 31. The level 0 indicates the weakest rigidity and lowest gain and level 31 indicates the strongest rigidity and highest gain. The following table lists the rigidity levels for different load types for your reference.

Table 6-3 Reference of rigidity level

Recommended Rigidity Level	Load Mechanism Type
Level 4 to level 8	Large-scale machineries
Level 8 to level 15	Applications with low rigidity such as the conveyors
Level 15 to level 20	Applications with high rigidity such as the ball screws and direct-connected motors

The servo drive supports two automatic gain adjustment modes.

CAUTION
◆ The parameter self-adjustment mode (H09-00 set to 1) is applicable to most applications. In application where positioning must be very quick, use the positioning mode (H09-00 set to 2).

1 Parameter self-adjustment mode (H09-00 set to 1)

The 1st gain parameters (H08-00 to H08-02 and H07-05) are automatically updated and saved based on

the rigidity level set in H09-01.

Table 6-4 Parameters automatically updated in the parameter self-adjustment mode

Para.		Name
H08	00	Speed loop gain
H08	01	Speed loop integral time constant
H08	02	Position loop gain
H07	05	Torque reference filter time constant

2 Positioning mode (H09-00 set to 2)

1) Based on Table 6-4, the 2nd gain parameters (H08-03 to H08-05 and H07-06) are also automatically updated and saved based on the rigidity level set in H09-01. In addition, the position loop gain in the 2nd gain parameters has a higher rigidity level than that in the 1st gain parameters.

Table 6-5 Parameters automatically updated in positioning mode

Para.	Name	Description
H08-03	2nd speed loop gain	
H08-04	2nd speed loop integral time constant	If H08-04 is set to remain at 512.00 ms, the 2nd speed loop integral action is invalid and only proportional control is used in the speed loop.
H08-05	2nd position loop gain	
H07-06	2nd torque reference filter time constant	

2) Speed feedforward parameters are fixed to certain values.

Table 6-6 Parameters with fixed values in positioning mode

Para.	Name	Value
H08-19	Speed feedforward gain	30.0%
H08-18	Speed feedforward filter time constant	0.50 ms

3) Gain switchover parameters are fixed to certain values.

In the positioning mode, gain switchover is automatically enabled.

Para.	Name	Value	Description
H08-08	2nd gain mode setting	1	In the positioning mode, switchover between the 1st gain (H08-00 to H08-02 and H07-05) and the 2nd gain (H08-03 to H08-05 and H07-06) is valid. In other modes, the original settings are used.
H08-09	Gain switchover condition	10	In the positioning mode, the gain switchover condition is that H08-09 is set to 10. In other modes, the original settings are used.
H08-10	Gain switchover delay	5.0 ms	In the positioning mode, the gain switchover delay is 5.0 ms. In other modes, the original settings are used.
H08-11	Gain switchover level	50	In the positioning mode, the gain switchover level is 50. In other modes, the original settings are used.

H08-12	Gain switchover dead time	30	In the positioning mode, the gain switchover dead time is 30. In other modes, the original settings are used.

CAUTION

◆ In the automatic gain adjustment mode, the parameters are automatically updated along with H09-01 (Rigidity level) and those with fixed values cannot be modified. To modify these parameters, set H09-00 to 0 to exit the automatic adjustment mode.

☆ Related parameters:

Para.	Name	Value Range	Unit	Function	Setting Condition	Effective Time	Default
H09-00	Automatic gain adjustment mode	0: Disabled. Parameters need to be adjusted manually. 1: Parameter auto-tuning mode. Parameters are adjusted automatically based on rigidity meter setting. 2: Positioning mode. Gain parameters are tuned automatically based on the rigidity meter setting.	-	Sets the self-adjustment mode.	During operation	Immediately	0
H09-01	Rigidity level	0 to 31	-	Sets the rigidity level.	During operation	Immediately	12

6.4 Manual Gain Adjustment

6.4.1 Basic Parameters

When automatic gain adjustment cannot produce satisfactory results, manually fine-tune the gain to achieve better result.

The servo system consists of three control loops from external to internal: position loop, speed loop, and current loop. The following figure shows the basic control block diagram.

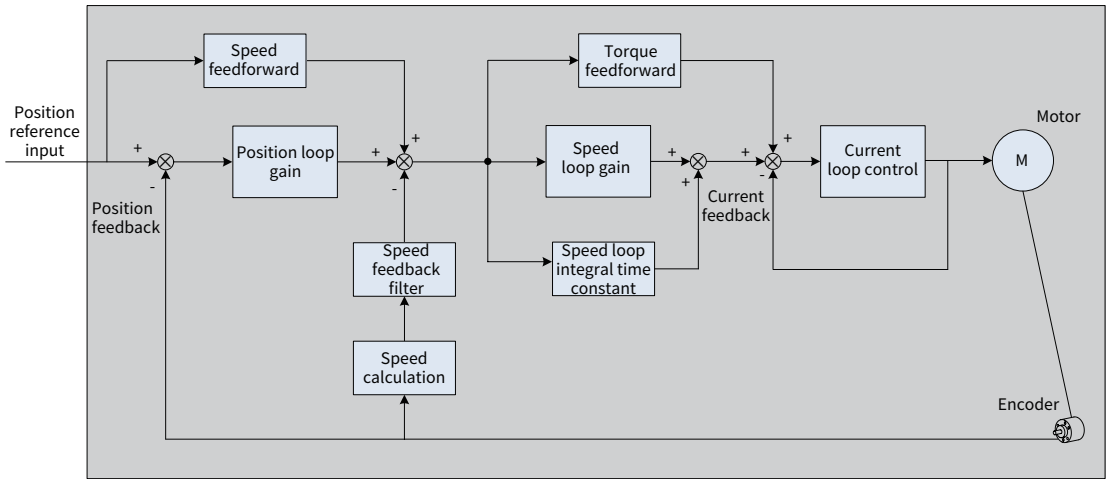

Figure 6-6 Basic control block diagram of manual gain adjustment

The most internal loop must have the highest responsivity. Failure to comply may cause system instability.

The default current loop gain of the servo drive ensures the responsivity, and generally does not need to be adjusted. You only need to adjust the position loop gain, speed loop gain, and other auxiliary gains. When executing gain adjustment in the position control mode, increase the speed loop gain as well after increasing the position loop gain, and ensure that the responsivity of the position loop is lower than that of the speed loop to keep the system stable.

The following table shows how to adjust basic gain parameters:

Table 6-7 Adjustment of gain parameters

Step	Para.	Name	Adjustment
1	H08-00	Speed loop gain	◆ Function: Sets the speed reference maximum frequency followed by the speed loop. When the average load inertia ratio (H08-15) is correct, it can be considered that the maximum follow-up frequency of the speed loop equals the value of H08-00. 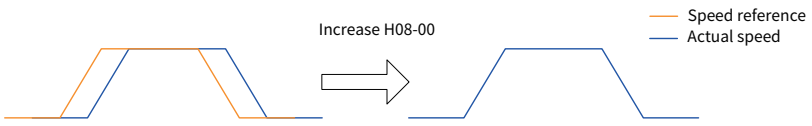 ◆ Adjustment method: Increase the value but ensure that there is no noise or vibration. This shortens the positioning time and improves speed stability and follow-up characteristics. If noise occurs, decrease the value. If mechanical vibration occurs, enable the resonance suppression function by referring to *"6.6 Vibration Suppression"*.
2	H08-01	Speed loop integral time constant	◆ Function: Eliminates the deviation of the speed loop. 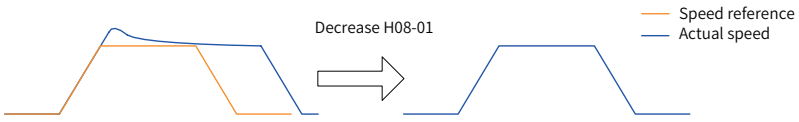 ◆ Adjustment method: Select the value as follows: 500 ⩽ H08-00 x H08-01 ⩽ 1000. For example, when H08-00 (Speed loop gain) is set to 40.0 Hz, H08-01 (Speed loop integral time constant) must meet the following condition: 12.50 ms ⩽ H08-01 ⩽ 25.00 ms. Reducing the value can enhance the integral effect and shorten the positioning time, but a very small value may cause mechanical vibration. A very large value may cause the homing action due to the speed loop deviation. When H08-01 is 512.00 ms, the integral action is invalid.

Step	Para.	Name	Adjustment
3	H08-02	Position loop gain	◆ Function: Sets the position reference maximum frequency followed by the position loop. The maximum follow-up frequency of the position loop equals the value of H08-02. 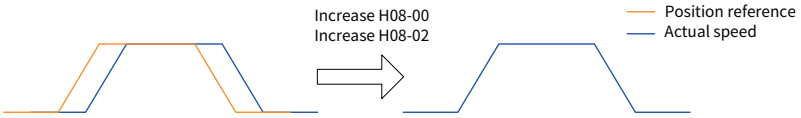 ◆ Adjustment method: To ensure system stability, the maximum follow-up frequency of the speed loop is 3 to 5 times that of the position loop, namely: $3 \leqslant \frac{2\times\pi\times H08\text{-}00}{H08\text{-}02} \leqslant 5$ For example, when H08-00 is set to 40.0 Hz, the position loop gain must meet the following condition: 50.2 Hz ⩽ H08-02 ⩽ 83.7 Hz. Adjust the setting based on the positioning time. Increasing the value shortens the positioning time and improves the motor's resistance to external disturbance in static state. A very large value may cause system instability and oscillation.
4	H07-05	Torque reference filter time constant	◆ Function: Eliminates high frequency noise and suppresses mechanical resonance. 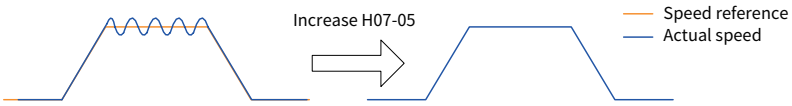 ◆ Adjustment method: Ensure that the cutoff frequency of the torque reference low-pass filter is higher than 4 times the maximum follow-up frequency of the speed loop, namely: $\frac{1000}{2\times\pi\times H07\text{-}05} \geqslant (H08\text{-}00)\times 4$ For example, when H08-00 is set to 40.0 Hz, the torque reference filter time constant must meet the following condition: H07-05 ⩽ 1.00 ms. If vibration occurs after H08-00 is increased, adjust H07-05 to suppress the vibration. For details, see *"6.6 Vibration Suppression"*. A very large value may reduce the responsivity of the current loop. To suppress vibration at stop, increase H08-00 and decrease H07-05. To suppress vibration when the motor is in the stop state, decrease H07-05.

☆ Related parameters:

Para.	Name	Value Range	Unit	Function	Setting Condition	Effective Time	Default
H08-00	Speed loop gain	0.1 to 2000.0	Hz	Sets the speed loop proportional gain.	During operation	Immediately	25.0
H08-01	Speed loop integral time constant	0.15 to 512.00	ms	Defines the speed loop integral time constant.	During operation	Immediately	31.83
H08-02	Position loop gain	0.0 to 2000.0	Hz	Sets the position loop proportional gain.	During operation	Immediately	40.0
H07-05	Torque reference filter time constant	0.00 to 30.00	ms	Sets the torque reference filter time constant.	During operation	Immediately	0.79

6.4.2 Gain Switchover

Gain switchover, which is active in the position control and speed control modes only, can be triggered by the internal servo status or an external DI signal to achieve the following purposes:

- Switching to the lower gain when the motor is at a standstill (servo ON) to suppress vibration
- Switching to the higher gain when the motor is at a standstill to shorten the positioning time
- Switching to the higher gain during operation of the motor to achieve better reference tracking performance
- Switching between different gain settings through an external signal to fit different conditions of the load devices

1 H08-08 set to 0:

When H08-08 is set to 0, the 1st gain (H08-00 to H08-02 and H07-05) is used, but you can switch between proportional control and proportional integral control through FunIN.3 (GAIN_SEL, gain switchover) for the speed loop.

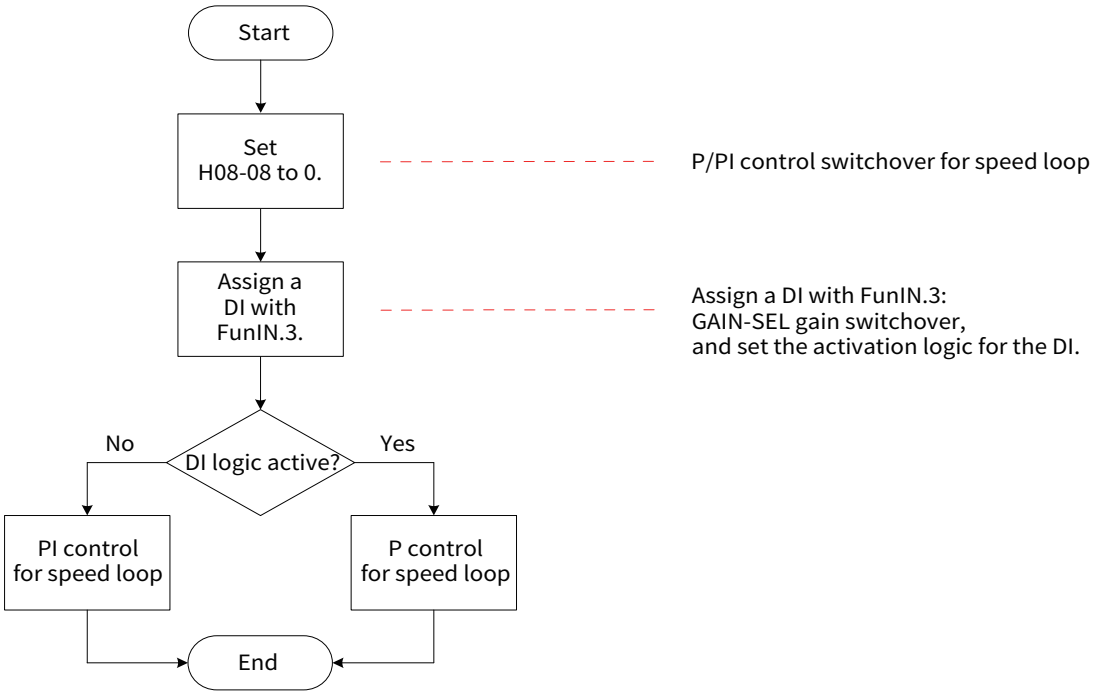

Figure 6-7 Gain switchover flowchart (H08-08 set to 0)

2 H08-08 set to 1:

You can switch between the 1st gain (H08-00 to H08-02 and H07-05) and 2nd gain (H08-03 to H08-05 and H07-06) based on the condition defined by H08-09.

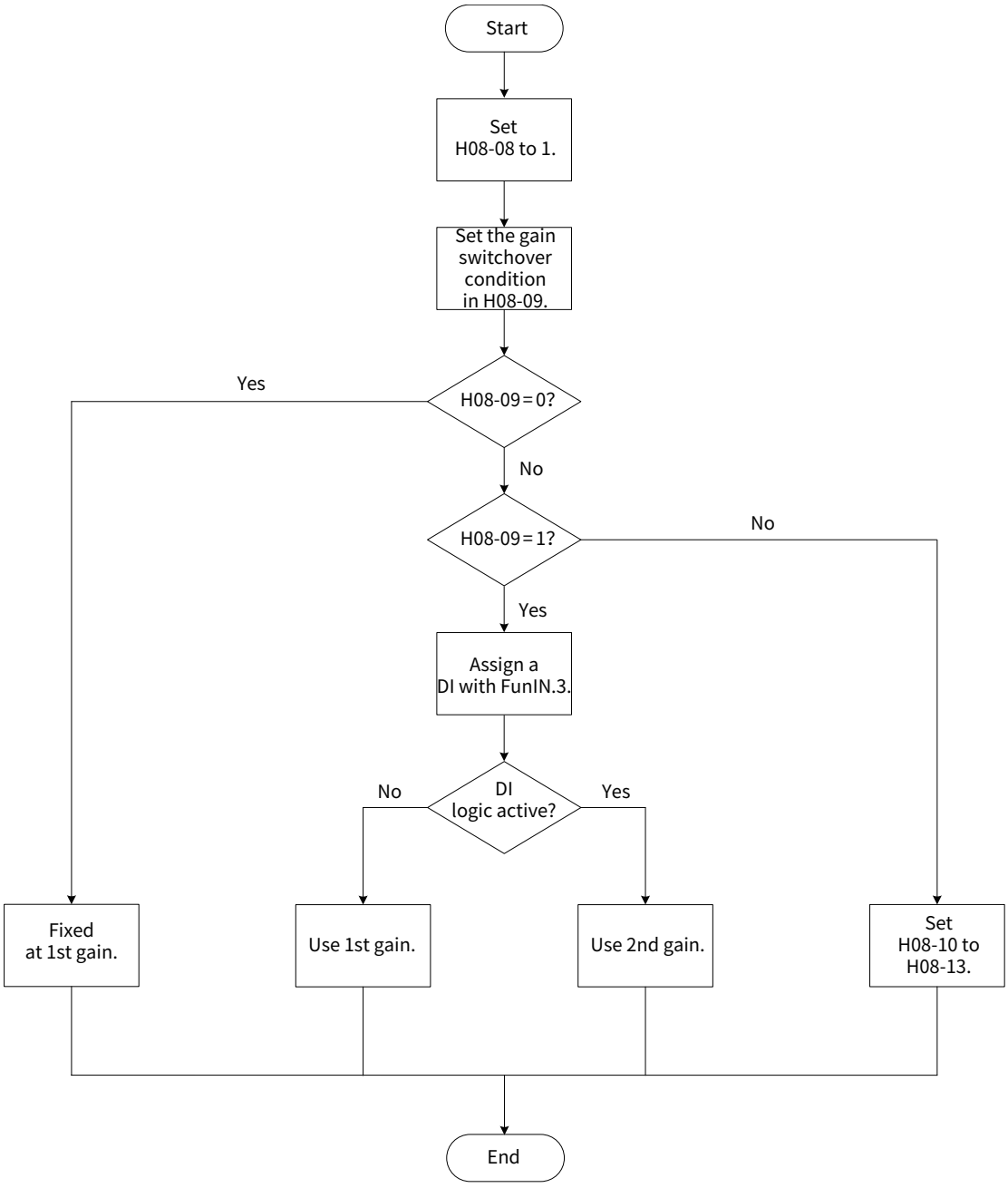

Figure 6-8 Gain switchover flowchart (H08-08 set to 1)

The following table describes the diagrams and parameters related to 11 kinds of gain switchover conditions.

Table 6-8 Gain switchover conditions

Gain Switchover Condition			Related Parameters		
H08-09	Requirement	Diagram	Delay Time (H08-10)	Switchover Level (H08-11)	Switchover Dead Time (H08-12)
0	Fixed at 1st gain	-	Inactive	Inactive	Inactive
1	External DI signal	-	Inactive	Inactive	Inactive

Gain Switchover Condition			Related Parameters		
2	Torque reference	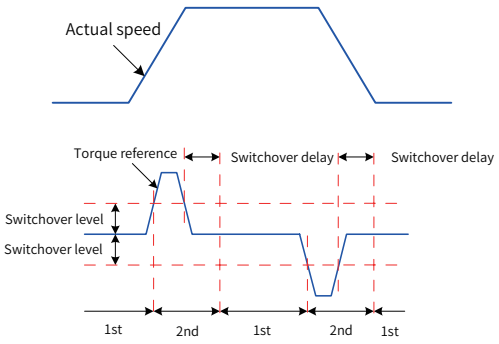	Active	Active (%)	Active (%)
3	Speed reference	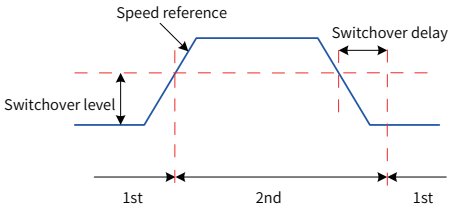	Active	Active	Active
4	Speed reference change rate	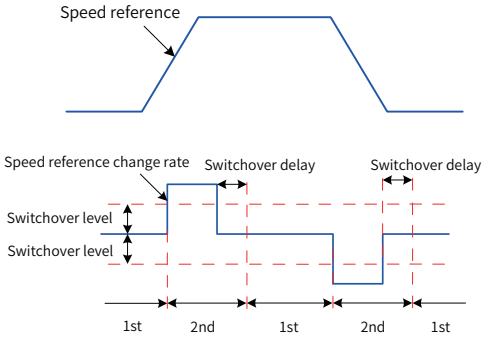	Active	Active (10 RPM/s)	Active (10 RPM/s)
5	High/Low-speed threshold of speed reference	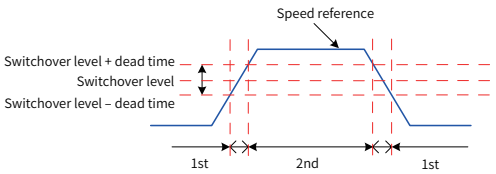	Inactive	Active (RPM)	Active (RPM)
6	Position deviation	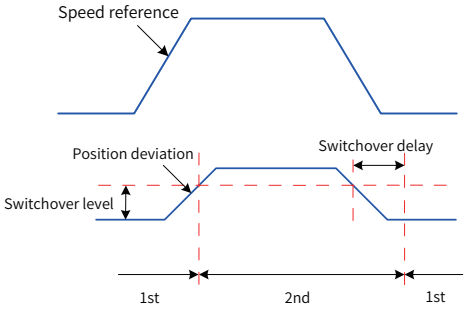	Active	Active (encoder unit)	Active (encoder unit)
7	Position reference	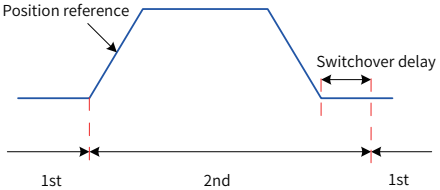	Active	Inactive	Inactive

Gain Switchover Condition			Related Parameters		
8	Positioning completed	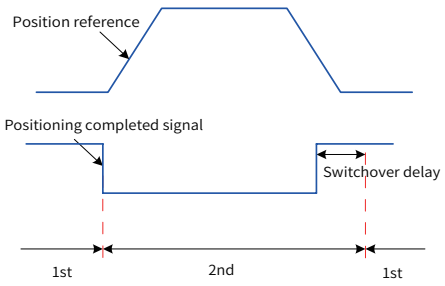	Active	Inactive	Inactive
9	Actual speed	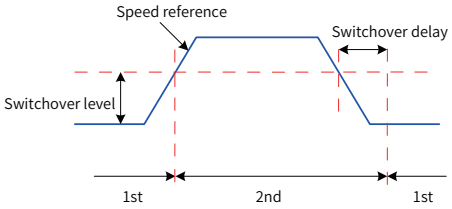	Active	Active (RPM)	Active (RPM)
10	Position reference available + actual speed	See the following note for details.	Active	Active (RPM)	Active (RPM)

CAUTION

◆ H08-10 is valid only when 2nd gain is switched over to 1st gain.

NOTE

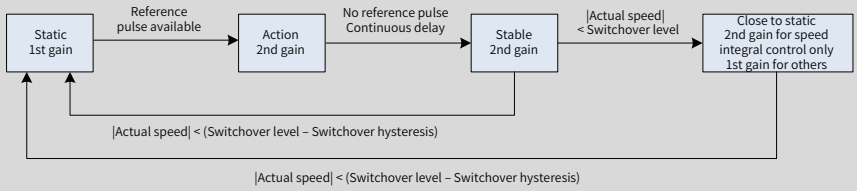

☆ Related parameters:

Para.	Name	Value Range	Unit	Function	Setting Condition	Effective Time	Default
H08-08	2nd gain mode setting	0: Fixed at 1st gain, P/PI switchover through external DI 1: Gain switchover based on the condition defined by H08-09	-	Defines the 2nd gain mode.	During operation	Immediately	1

Para.	Name	Value Range	Unit	Function	Setting Condition	Effective Time	Default
H08-09	Gain switchover condition	0: Fixed at 1st gain 1: Switchover by external DI 2: Large torque reference 3: Large speed reference 4: Large speed reference change rate 5: High/Low-speed threshold of speed reference 6: Large position deviation 7: Position reference available 8: Positioning completed 9: Large actual motor speed 10: Position reference available + actual speed	-	Defines the gain switchover condition.	During operation	Immediately	0
H08-10	Gain switchover delay	0 to 10	-	Defines the gain switchover delay.	During operation	Immediately	5.0
H08-11	Gain switchover level	1 to 1000	Based on the switchover condition	Defines the gain switchover level.	During operation	Immediately	50
H08-12	Gain switchover dead time	0 to 20000	Based on the switchover condition	Defines the gain switchover dead time.	During operation	Immediately	30
H08-13	Position gain switchover time	0.0 to 100.0	ms	Defines the position loop gain switchover time.	During operation	Immediately	3.0

6.4.3 Filter Comparison

Name	Function	Applicable Scenario	Impact of Excessive Filtering	Index

Pulse input terminal filter	Prevents inaccurate number of pulses received by the servo drive due to interference.	The system wiring is incorrect. Strong interference exists in the environment.	The number of pulses received by the servo drive is smaller than that sent by the host controller.	6.2.1
Position reference filter	Filters the position references (encoder unit) divided or multiplied by the electronic gear ratio to smoothen the operation process of the motor and reduce shock to the machine.	The acceleration/deceleration process is not performed on the position references sent from the host controller. The pulse reference frequency is low. The electronic gear ratio is greater than 10.	The response delay is prolonged.	6.2.3
Analog input filter	Prevents motor reference fluctuation due to instable analog input voltage and eliminates motor malfunction due to signal interference.	The system wiring is incorrect. Strong interference exists in the environment.	The response delay is prolonged.	6.3.1 and 6.4.1

6.4.4 Feedforward Gain

1 Speed feedforward

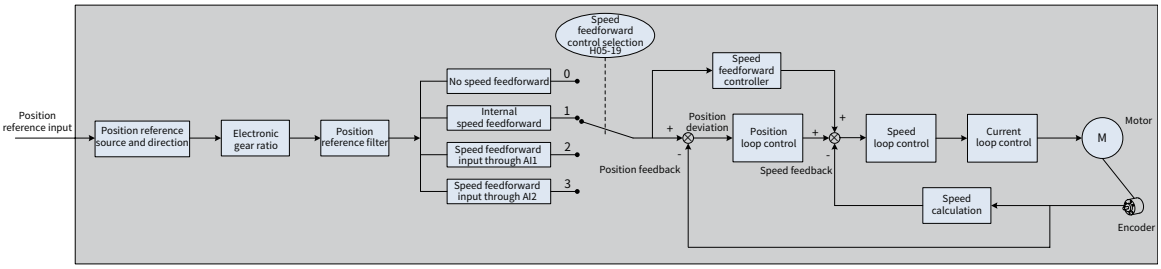

Figure 6-9 Operating procedure for speed feedforward control

Speed feedforward can be applied to position control mode and fully closed-loop control to improve the speed reference responsivity and reduce the position deviation during operation at constant speed.

Operating procedure for speed feedforward:

1) Set the speed feedforward signal source.

Set H05-19 (Speed feedforward control) to a non-zero value to enable the speed feedforward function. The corresponding signal source will be selected as well.

Para.	Name	Value	Remarks

H05-19	Speed feed-forward control	0: No speed feedforward	-
		1: Internal speed feedforward	Defines the speed corresponding to the position reference (encoder unit) as the speed feedforward signal source.
		2: AI1 used as speed feedforward input	Defines the speed corresponding to the AI1 input as the speed feedforward signal source. For AI1 setting, see descriptions of H03-80, H03-50, H03-51, H03-53, and H03-54.
		3: AI2 used as speed feedforward input	Defines the speed corresponding to the AI2 input as the speed feedforward signal source. For AI2 setting, see descriptions of H03-80, H03-55, H03-56, H03-58, and H03-59.

2) Set speed feedforward parameters.

Set the speed feedforward gain (H08-19) and speed feedforward filter time constant (H08-18).

Para.	Name	Adjustment
H08-18	Speed feed-forward filter time constant	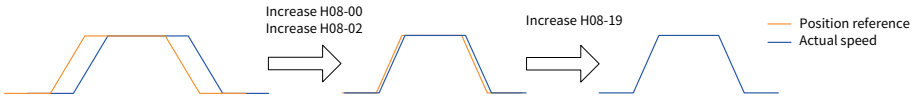 ◆ Function: Increasing the value of H08-19 improves the responsivity but may cause overshoot during acceleration/deceleration.
H08-19	Speed feedforward gain	Decreasing the value of H08-18 suppresses overshoot during acceleration/deceleration. Increasing the value of H08-18 suppresses the noise in the case of long position reference update period and drive control period and uneven position reference pulse frequency, and suppresses jitter of the positioning completed signal. ◆ Adjustment method: Set H08-18 to a fixed value first, and then increase the value of H08-19 gradually from 0 to a certain value at which speed feedforward achieves the desired effect. Adjust H08-18 and H08-19 repeatedly until a balanced performance is achieved.

2 Torque feedforward:

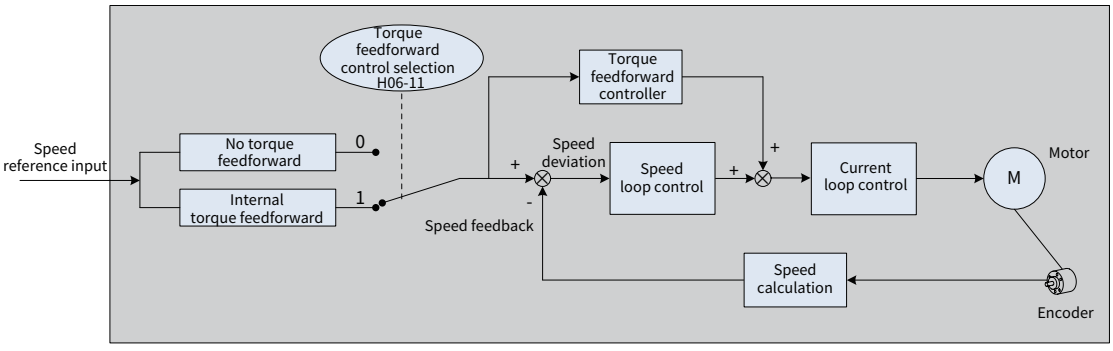

Figure 6-10 Operating procedure for torque feedforward control

In the position control mode, torque feedforward can be used to improve torque reference responsivity and reduce the position deviation during operation at constant acceleration/deceleration rate. In the speed control mode, torque feedforward can be used to improve torque reference responsivity and decreases the position deviation at fixed speed.

Operating procedure for torque feedforward:

1) Set the torque feedforward signal source.

Set H06-11 (Torque feedforward control) to 1 to enable the torque feedforward function. The corresponding signal source will be selected as well.

Para.	Name	Value	Remarks
H06-11	Torque feed-forward control	0: No torque feedforward	-
		1: Internal torque feedforward	Defines the speed reference as the torque feedforward signal source. In the position control mode, the speed reference is outputted from the position controller.

2) Set torque feedforward parameters.

Para.	Name	Adjustment
H08-20	Torque feed-forward filter time constant	◆ Function: Increasing the value of H08-21 improves the responsivity but may cause overshoot during acceleration/deceleration. Decreasing the value of H08-20 suppresses overshoot during acceleration/deceleration. Increasing the value of H08-20 suppresses the noise. ◆ Adjustment method: Keep H08-20 to the default value, and then gradually increase the value of H08-21 from 0 to a certain value at which torque feedforward achieves the desired effect. Adjust H08-20 and H08-21 repeatedly until a balanced performance is achieved.
H08-21	Torque feedfor-ward gain	For details, see *"6.4.4 Feedforward Gain"*.

6.4.5 PDFF Control

The pseudo differential forward and feedback (PDFF) control can be used to adjust speed loop control in the non-torque control mode.

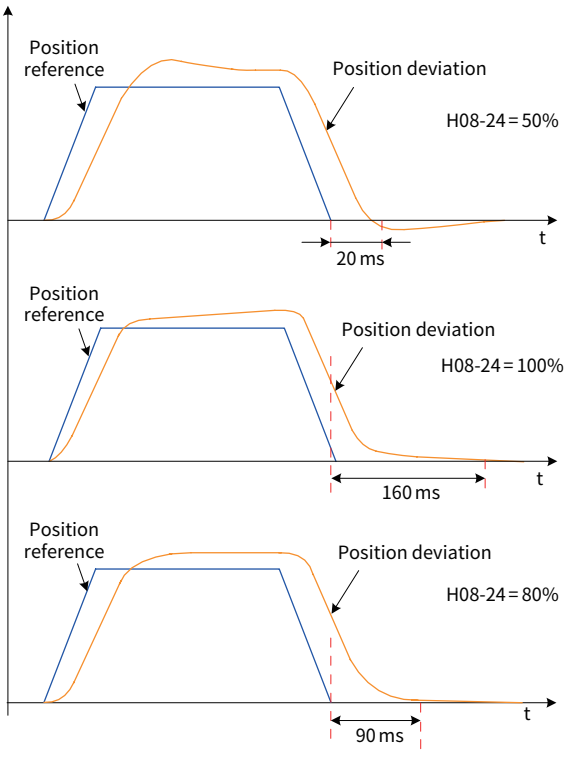

Figure 6-11 Example of PDFF control

Through adjusting the speed loop control method, PDFF control enhances the anti-disturbance capacity of the speed loop and improves the performance in the following speed references.

Para.	Name	Adjustment
H08-24	PDFF control coefficient	◆ Function: Defines the control method of the speed loop in the non-torque control modes. ◆ Adjustment method: Setting H08-24 to an excessively low value slows down the responsivity of the speed loop. When the speed feedback overshoots, gradually decrease the setpoint of H08-24 from 100.0 to a certain value at which the PDFF control achieves the desired effect. When H08-24 is set to 100.0, the speed loop control method does not change and the default proportional integral control is used.

6.4.6 Torque Disturbance Observer

This function is used in the non-torque control modes.

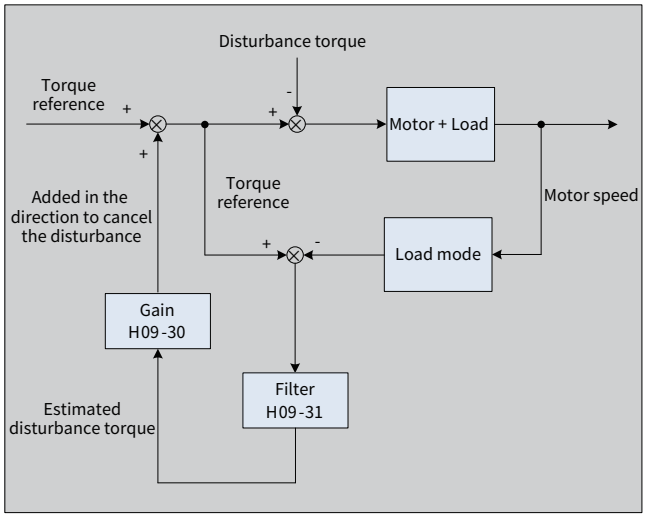

Figure 6-12 Block diagram of the disturbance observer

The disturbance observer detects and estimates the external disturbance torque on the system, and compensates the torque reference, which reduces the effect of external disturbance on the servo system and reduces vibration.

Para.	Name	Adjustment
H09-30	Torque disturbance compensation gain	◆ Function: Increasing the value of H09-30 (that is, increase the proportion of the compensation torque super-positioned to the torque reference) improves disturbance suppression but increases the noise. Increasing the value of H09-31 reduces the noise. If the value of H09-31 is decreased, the external disturbance torque with small delay can be detected and estimated, improving disturbance suppression but increase the noise. ◆ Adjustment method: Set H09-31 to a larger value first, and then increase the value of H09-30 gradually from 0 to a certain value at which disturbance observer achieves the desired effect. Finally, gradually decrease the value of H09-31 on the condition that the disturbance observer keeps valid. Adjust H09-30 and H09-31 repeatedly until a balanced performance is achieved.
H09-31	Filter time constant of torque disturbance observer	

☆ Related parameters:

Para.	Name	Value Range	Unit	Function	Setting Condition	Effective Time	Default
H08-18	Speed feedforward filter time constant	0.00 to 64.00	ms	Defines the filter time constant of speed feedforward.	During operation	Immediately	0.00
H08-19	Speed feedforward gain	0.0 to 100.0	%	Defines the speed feedforward gain.	During operation	Immediately	0.0
H08-20	Torque feedforward filter time constant	0.00 to 64.00	ms	Defines the filter time constant of torque feedforward.	During operation	Immediately	0.50
H08-21	Torque feedforward gain	0.0 to 200.0	ms	Defines the torque feedforward gain.	During operation	Immediately	0.0
H08-24	PDFF control coefficient	0.0 to 100.0	%	PDFF control coefficient	During operation	Immediately	100.0
H09-30	Torque disturbance compensation gain	0 to 100.0	%	Defines the torque disturbance compensation gain.	During operation	Immediately	0.0
H09-31	Filter time constant of torque disturbance observer	0.00 to 25.00	ms	Defines the filter time constant of the disturbance observer.	During operation	Immediately	0.50

6.5 Parameter Adjustment in Different Control Modes

Perform parameter adjustment in the sequence of inertia auto-tuning > gain auto-tuning > manual gain tuning in all the control modes.

6.5.1 Parameter Adjustment in the Position Control Mode

1 Obtain the value of H08-15 (Load inertia ratio) through inertia auto-tuning.

2 Gain parameters in the position control mode are listed in the following tables.

1) 1st gain:

Para.	Name	Function	Default Value
H07-05	Torque reference filter time constant	Defines the torque reference filter time constant.	0.79 ms
H08-00	Speed loop gain	Defines the speed loop proportional gain.	25.0 Hz
H08-01	Speed loop integral time constant	Defines the speed loop integral time constant.	31.83 ms
H08-02	Position loop gain	Defines the position loop proportional gain.	40.0 Hz

2) 2nd gain:

Para.	Name	Function	Default Value
H07-06	2nd torque reference filter time constant	Defines the torque reference filter time constant.	0.79 ms
H08-03	2nd speed loop gain	Defines the speed loop proportional gain.	40.0 Hz

H08-04	2nd speed loop integral time constant	Defines the speed loop integral time constant.	20.00 ms
H08-05	2nd position loop gain	Defines the position loop proportional gain.	64.0 ms
H08-08	2nd gain mode setting	Defines the 2nd gain mode.	1
H08-09	Gain switchover condition	Defines the gain switchover condition.	0
H08-10	Gain switchover delay	Defines the gain switchover delay.	5.0 ms
H08-11	Gain switchover level	Defines the gain switchover level.	50
H08-12	Gain switchover dead time	Defines the gain switchover dead time.	30
H08-13	Position gain switchover time	Defines the position loop gain switchover time.	3.0 ms

3) Common gain

Para.	Name	Function	Default Value
H08-18	Speed feedforward filter time constant	Defines the speed feedforward filter time constant.	0.50 ms
H08-19	Speed feedforward gain	Defines the speed feedforward gain.	0.0%
H08-20	Torque feedforward filter time constant	Defines the torque feedforward filter time constant.	0.50 ms
H08-21	Torque feedforward gain	Defines the torque feedforward gain.	0.0%
H08-22	Speed feedback filter option	Defines the speed feedback filter function.	0
H08-23	Cutoff frequency of speed feedback low-pass filter	Defines the cutoff frequency of the first-order low-pass filter for speed feedback.	4000 Hz
H08-24	PDFF control coefficient	Defines the coefficient of the PDFF controller.	100.0%
H09-30	Torque disturbance compensation gain	Defines the torque disturbance compensation gain.	0.0%
H09-31	Filter time constant of torque disturbance observer	Defines the filter time constant of the disturbance observer.	0.5 ms
H09-04	Low-frequency resonance suppression mode	Defines the low-frequency resonance suppression mode.	0
H09-38	Low-frequency resonance frequency	Defines the frequency of the low-frequency resonance suppression filter.	100.0 Hz
H09-39	Filter setting of low-frequency resonance frequency	Defines the setting of low-frequency resonance suppression filter.	2
H0A-16	Threshold of low-frequency resonance position deviation	Defines the position deviation threshold (in pulses) which can be judged as low-frequency resonance.	0.0005 Rev

3 Perform gain auto-tuning to get the initial values of the 1st gain (or 2nd gain) and the common gain.

4 Fine-tune the following gains manually.

Para.	Name	Function
H07-05	Torque reference filter time constant	Defines the torque reference filter time constant.

Para.	Name	Function
H08-00	Speed loop gain	Defines the speed loop proportional gain.
H08-01	Speed loop integral time constant	Defines the speed loop integral time constant.
H08-02	Position loop gain	Defines the position loop proportional gain.
H08-19	Speed feedforward gain	Defines the speed feedforward gain.

6.5.2 Parameter Adjustment in the Speed Control Mode

Parameter adjustment in the speed control mode is the same as that in the position control mode, except for the position loop gain (H08-02 and H08-05). For details, see section 7.5.1.

6.5.3 Parameter Adjustment in the Torque Control Mode

Parameter adjustment in the torque control mode is differentiated based on the following conditions:

When the actual speed reaches the speed limit (for the speed limit in the torque control mode, see *"5.4.4 Speed Limit in Torque Control"*), the adjustment method is the same as that described in section 7.5.2.
When the actual speed does not reach the speed limit, the adjustment method is the same as that described in section 7.5.2, except for the position/speed loop gain and speed loop integral time constant.

6.6 Vibration Suppression

6.6.1 Suppression of Mechanical Resonance

Every mechanical system has its natural resonance frequency. Resonance may occur at this resonance frequency when the servo gain is increased, making the gain cannot be increased further.

Mechanical resonance can be suppressed in the following ways:

1 Torque reference filter (H07-05, H07-06)

Set H07-05 (Torque reference filter time constant) to make the torque reference attenuate in the high frequency band above the cutoff frequency to suppress the mechanical resonance.

Filter cutoff frequency fc (Hz) = 1/[2π x H07-05 (ms) x 0.001]

2 Notch:

The notch reduces the gain at certain frequency to suppress mechanical resonance. After resonance is suppressed with correct notch setting, you may increase the gain gradually. The following figure shows the working principle of the notch.

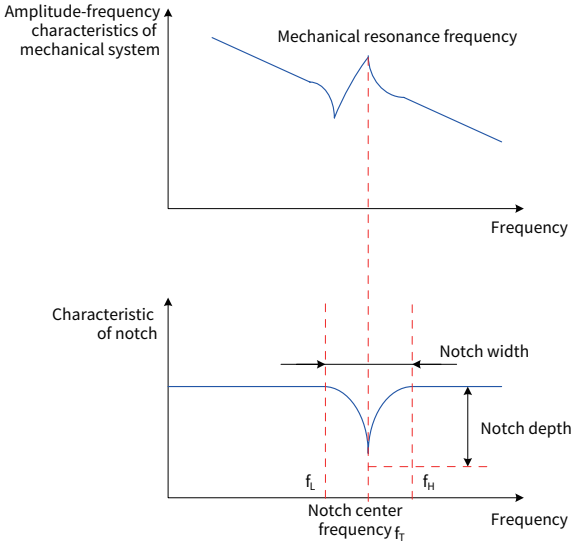

Figure 6-13 Suppression principle of the notch

A total of four notches can be used, and each is defined by three parameters: frequency, width level, and depth level. The 1st and 2nd notches are manual notches, and their parameters need to be set manually. The 3rd and 4th notches can be set as manual notches or adaptive notches (H09-02 set to 1 or 2). When they are used as adaptive notches, their parameters are automatically set by the servo drive.

Table 6-9 Notch description

Item	Manual Notch		Manual/Adaptive Notch	
	1st notch	2nd notch	3rd notch	4th notch
Frequency	H09-12	H09-15	H09-18	H09-21
Width level	H09-13	H09-16	H09-19	H09-22
Depth level	H09-14	H09-17	H09-20	H09-23

NOTE

◆ When the frequency is 4000 Hz (default), the notch is invalid.

CAUTION

◆ The adaptive notch is preferred when the notch is used for resonance suppression. If the adaptive notch is invalid or cannot achieve the desired effect, use the manual notch.

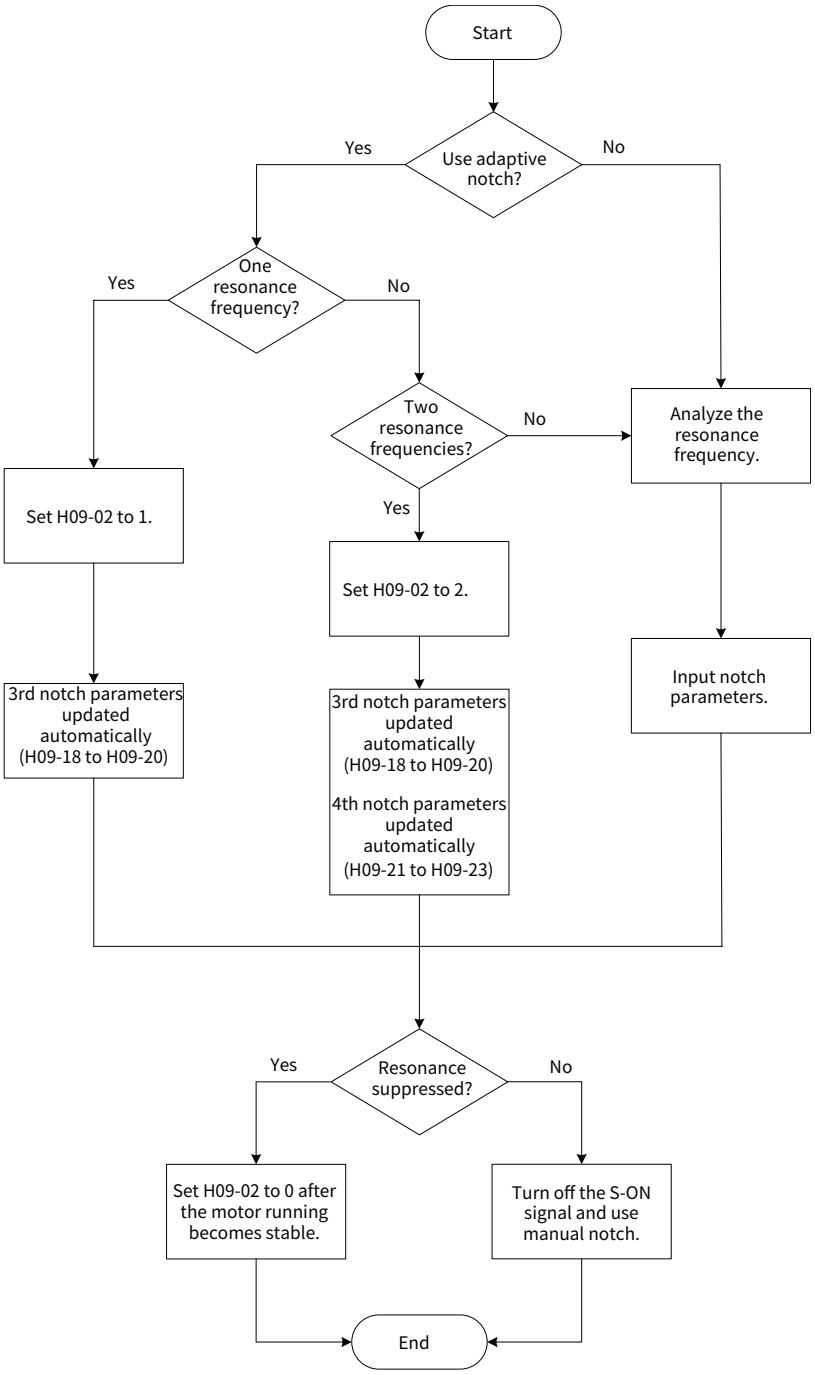

Figure 6-14 Procedure of setting a notch

1) Procedure of setting an adaptive notch

Set H09-02 (Adaptive notch mode selection) to 1 or 2 based on the number of resonance frequencies.

When resonance occurs, set H09-02 to 1 first to enable one adaptive notch. If new resonance occurs after gain adjustment, set H09-02 to 2 to enable two adaptive notches.

When the servo drive runs, parameters of the 3rd or 4th notch are automatically updated and their values are written to the corresponding H09 group parameters every 30 minutes.

If resonance is suppressed, the adaptive notch works. After the servo drive runs stably for a period of time, set H09-02 to 0 and the parameters of the adaptive notch are fixed to the last updated values.

Otherwise, malfunction during servo running makes the notch parameters be changed to incorrect values, increasing vibration.

If vibration persists, switch off the S-ON signal of the servo drive.

If there are more than two resonance frequencies, the problem cannot be solved by only using the adaptive notches. In this case, add a manual notch, or use all the four notches as manual ones by setting H09-02 to 0.

CAUTION
◆ During use of the adaptive notch, the latest parameters will not be stored to the corresponding function codes if the S-ON signal is switched off within 30 minutes. ◆ When the resonance frequency is below 300 Hz, the suppression effective of the adaptive notch may degrade.

2) Procedure of setting a manual notch:

Analyze the resonance frequency.

When using the manual notch, set the frequency to the actual resonance frequency. The resonance frequency can be obtained by using the following methods:

- Use the mechanical feature analysis function of Inovance software tool.
- Calculate the resonance frequency based on the motor phase current displayed on the oscilloscope interface of Inovance software tool.
- Set H09-02 to 3 so that the servo drive automatically detects the resonance frequency during running and saves the detection result to H09-24.

Input the resonance frequency obtained in Step 1 to the parameter of the selected notch and set the width level and depth level of the notch.

If resonance is suppressed, the notch works. Then, increase the gain. If new resonance occurs, repeat steps 1-2.

If vibration persists, switch off the S-ON signal of the servo drive.

3) Notch width level

The notch width level is the ratio of the notch width to the notch central frequency and is calculated according to the following formula:

$$\text{Notch width level} = \frac{f_H - f_L}{f_T}$$

Where,

f_T is the notch central frequency, that is, the mechanical resonance frequency.

$f_H - f_L$ is the notch width, that is, the frequency bandwidth with an amplitude attenuation rate of –3 dB relative to the notch central frequency.

The following figure shows the relationship between notch width and depth. The default width level is 2.

4) Notch depth level

The notch depth level is the ratio of input to output at the central frequency.

The input is completely shut with depth level 0 and fully received with depth level 100 at the central frequency. A smaller notch depth level indicates greater notch depth, which produces stronger resonance suppression and makes the system instable. Pay attention to this during use.

CAUTION
◆ If the amplitude frequency characteristic curve obtained through the mechanical feature analysis function does not have obvious peak, it indicates that vibration occurs actually. Such vibration may not be mechanical resonance, and cannot be suppressed by the notch. It occurs because the gain reaches the limit, and can be suppressed only by reducing the gain or the filter time of torque reference.

The following figure shows the relationship between notch width and depth.

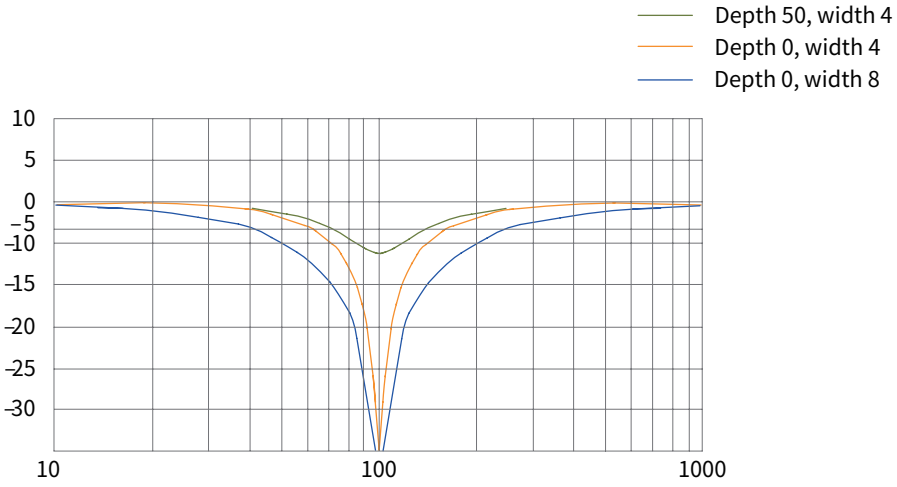

Figure 6-15 Notch frequency characteristics

☆ Related parameters:

Para.	Name	Value Range	Unit	Function	Setting Condition	Effective Time	Default
H09-02	Adaptive notch mode	0: Parameters of the 3rd and 4th notches are not updated 1: One adaptive notch (3rd notch) is valid and its parameters are updated in real time based on vibration 2: Two adaptive notches (3rd and 4th notches) are valid and their parameters are updated in real time based on vibration 3: Only resonance frequency is detected and displayed in H09-24 4: The 3rd and 4th notches are cleared and their settings are restored to default	-	Sets the adaptive notch mode.	During operation	Immediately	0
H09-12	1st notch frequency	50 to 4000	Hz	Sets the frequency of the 1st notch.	During operation	Immediately	4000
H09-13	1st notch width level	0 to 10	-	Sets the width level of the 1st notch.	During operation	Immediately	2
H09-14	1st notch depth level	0 to 99	-	Sets the attenuation level of the 1st notch.	During operation	Immediately	0
H09-15	2nd notch frequency	50 to 4000	Hz	Sets the frequency of the 2nd notch.	During operation	Immediately	4000
H09-16	2nd notch width level	0 to 10	-	Sets the width level of the 2nd notch.	During operation	Immediately	2
H09-17	2nd notch depth level	0 to 99	-	Sets the attenuation level of the 2nd notch.	During operation	Immediately	0
H09-18	3rd notch frequency	50 to 4000	Hz	Sets the frequency of the 3rd notch.	During operation	Immediately	4000
H09-19	3rd notch width level	0 to 10	-	Sets the width level of the 3rd notch.	During operation	Immediately	2
H09-20	3rd notch depth level	0 to 99	-	Sets the attenuation level of the 3rd notch.	During operation	Immediately	0

Para.	Name	Value Range	Unit	Function	Setting Condition	Effective Time	Default
H09-21	4th notch frequency	50 to 4000	Hz	Sets the frequency of the 4th notch.	During operation	Immediately	4000
H09-22	4th notch width level	0 to 10	-	Sets the width level of the 4th notch.	During operation	Immediately	2
H09-23	4th notch depth level	0 to 99	-	Sets the attenuation level of the 4th notch.	During operation	Immediately	0
H09-24	Auto-tuned resonance frequency	-	Hz	Displays the auto-tuned resonance frequency when H09-02 is set to 3.	-	-	0

6.6.2 Suppression of Low-Frequency Resonance

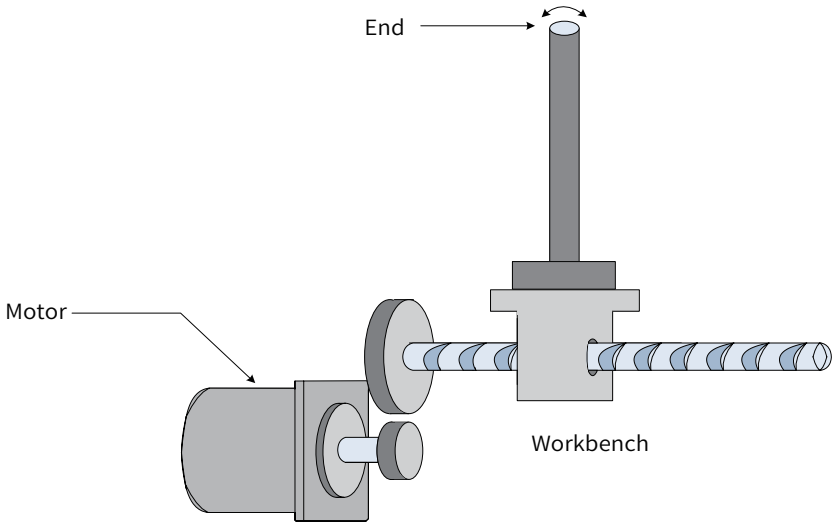

Figure 6-16 Mechanical diagram of low-frequency resonance

If the mechanical load end is long and heavy, vibration may easily occur in this part during emergency stop, affecting the positioning effect. Such vibration is called low-frequency resonance as its frequency is generally within 100 Hz, which is lower than the mechanical resonance frequency mentioned in section 7.6.1. Use the low-frequency resonance suppression function to suppress such vibration.

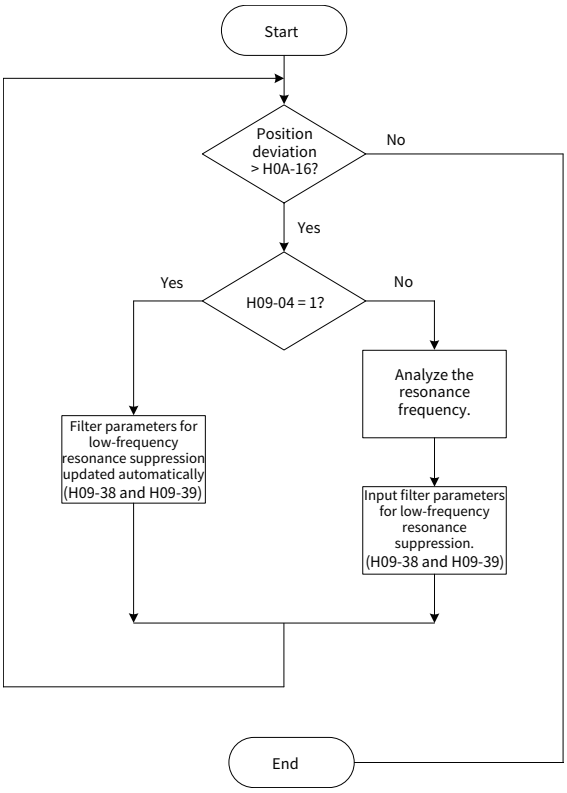

Figure 6-17 Procedure for setting low-frequency resonance suppression filter

1) Set H0A-16 (Threshold of low-frequency resonance position deviation).

The system considers that low-frequency resonance occurs when the position deviation exceeds H0A-16. Resonance may be detected more easily if this parameter is set to a small value.

2) Set H09-04 (Low-frequency resonance suppression mode).

The servo drive provides two methods to suppress low-frequency resonance, and the automatic method is preferred.

1) H09-04 set to 1 (Automatically set parameters of low-frequency resonance suppression filter)

The servo drive automatically detects the frequency and amplitude of the low-frequency resonance, and automatically sets H09-38 (Frequency of low-frequency resonance) and H09-39 (Filter setting of low-frequency resonance)

2) H09-04 set to 0 (Manually set parameters of low-frequency resonance suppression filter)

First, use the oscilloscope function in the Inovance software tool to collect the position deviation waveform of the motor in the positioning state. Then calculate the position deviation fluctuation frequency, which is the low-frequency resonance frequency.

Finally, input the value of H09-38 manually and use the default value of H09-39.

3) Observe whether the position deviation still exceeds H0A-16 after the low-frequency resonance suppression filter is used.

If yes, repeat steps 2 to 3. If not, it indicates that the low-frequency resonance is suppressed.

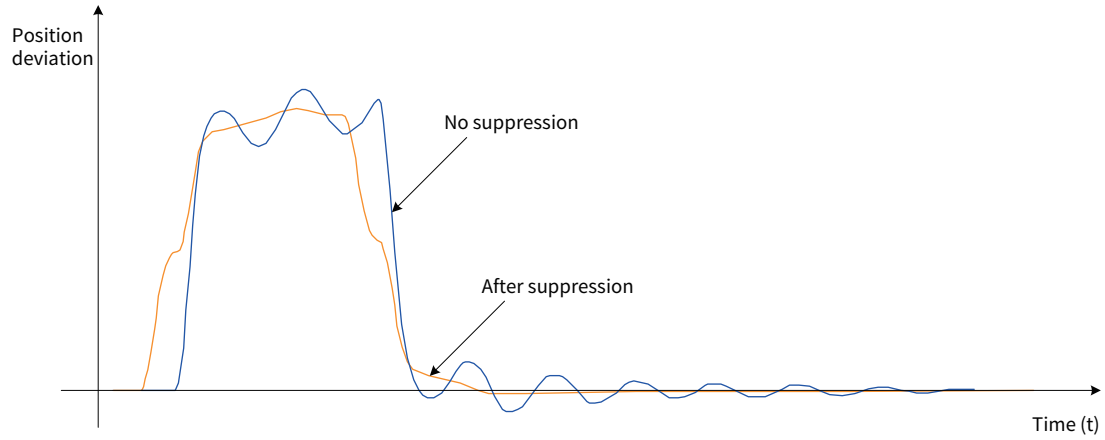

Figure 6-18 Low-frequency resonance suppression effect

☆ Related parameters:

Para.	Name	Value Range	Unit	Function	Setting Condition	Effective Time	Default
H09-04	Low-frequency resonance suppression mode	0: Manually set parameters of low-frequency resonance suppression filter 1: Automatically set parameters of low-frequency resonance suppression filter	-	Defines the low-frequency resonance suppression mode.	During operation	Immediately	0
H09-38	Low-frequency resonance frequency	1.0 to 100.0	Hz	Defines the frequency of the low-frequency resonance suppression filter.	During operation	Immediately	100.0
H09-39	Filter setting of low-frequency resonance frequency	0 to 10	-	Defines the width level of the low-frequency resonance suppression filter.	During operation	Immediately	2
H0A-16	Threshold of low-frequency resonance position deviation	1 to 1000	P	Defines the position deviation threshold (in pulses) which can be judged as low-frequency resonance.	During operation	Immediately	5

Chapter 7 Communication

The servo drive supports communication over Modbus (RS232 and RS485), CANlink, and CANopen. Users can modify and view parameters and monitor servo drive status on the host controller configured with the communication software.

7.1 Modbus Communication

RS485 supports networking of multiple servo drives, one master and multiple slaves. RS232 does not support networking of multiple servo drives.

7.1.1 Hardware Connection and EMC Notice

1 RS232 connection diagram

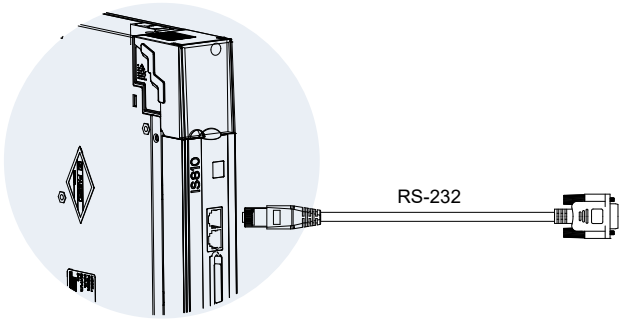

Figure 7-1 RS232 connection diagram

2 RS485 connection diagram

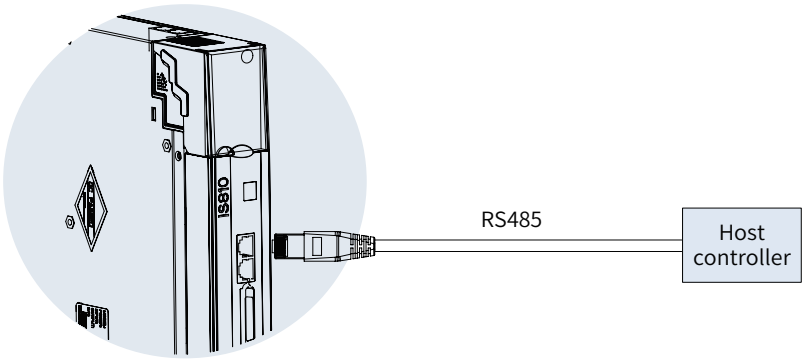

Figure 7-2 RS485 connection diagram

3 When there are large number of nodes, the RS485 bus structure of hand-in-hand connection is recommended.

If a branch line is needed, the length of the branch cable should be less than 3 m and as short as possible. Star connection is strictly prohibited. The following figure shows the commonly-used bus topologies.

1) Hand-in-hand connection structure (recommended)

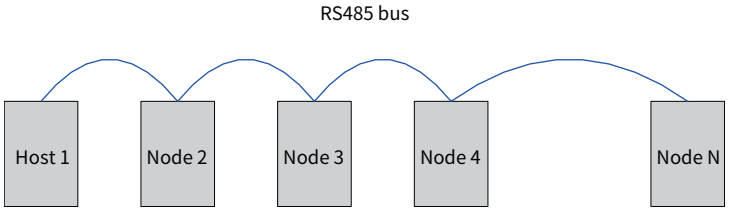

Figure 7-3 Hand-in-hand connection structure

2) Branch connection structure

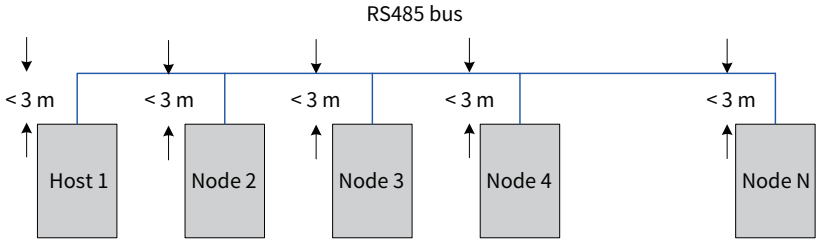

Figure 7-4 Branch connection structure

3) Incorrect: star connection structure

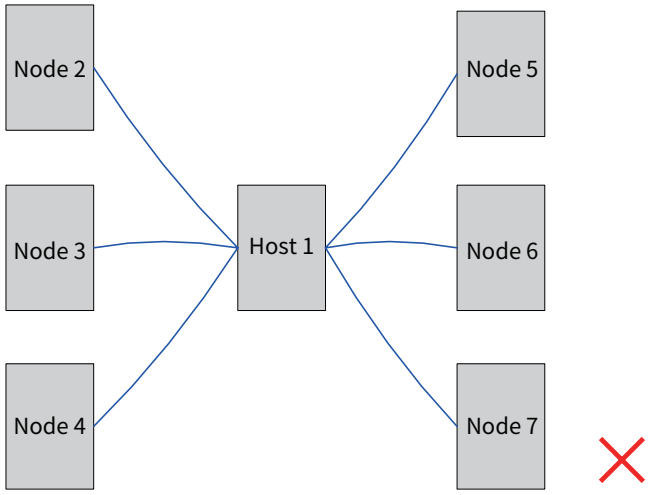

Figure 7-5 Incorrect: star connection structure

NOTE

- Connect the correct bias resistor and termination resistor. For details, see Problem 1.
- Use the twisted pair as the RS485 communication cable.
- Use a third cable to connect the RS485 circuit reference ground GND.
- If the shielded cable is used, it is recommended to connect both ends of the shield to PE. Do not connect either end to GND; otherwise, the terminal will be damaged.
- Use the hand-in-hand connection structure. For details, see Problem 3.
- When an extra PE cable is used to connect PE terminals of all nodes, follow the requirements in "7.1.2 EMC Requirements".
- The RS485 bus must be separated from other interference cables. For details, see "7.1.2 EMC Requirements".

7.1.2 EMC Requirements

1 Field cabling requirements

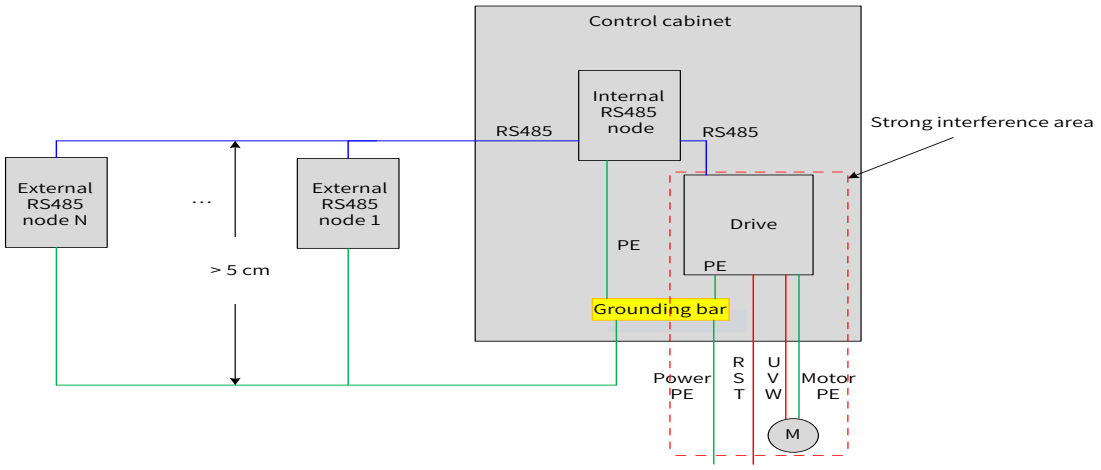

Figure 7-6 Cabling diagram

NOTE

- Isolate the interfering source from the sensitive devices.
- Lay the interfering devices and cables in a very small area, for example, close to the cable outlet.

2 PE cable connection requirements

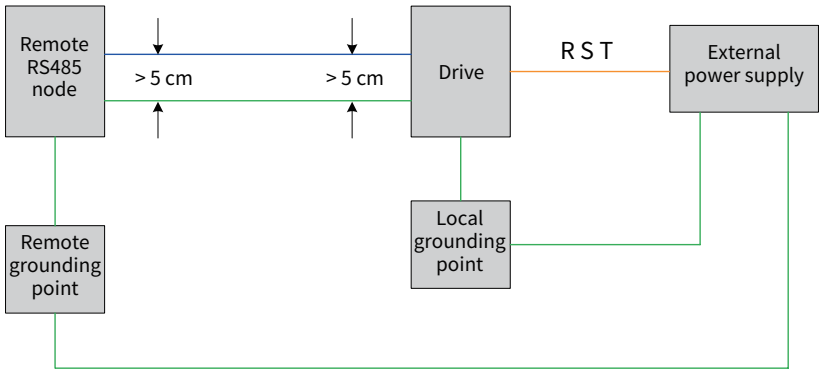

Figure 7-7 PE cable connection diagram

NOTE

- The PE cable must be thicker than the AWG12 cable.
- Connect the PE cable to the grounding terminal of the node or the grounding bar in the cabinet where the node is installed.
- 3. The distance between the PE cable and the bus must be larger than 5 cm.

3 Cabling requirements

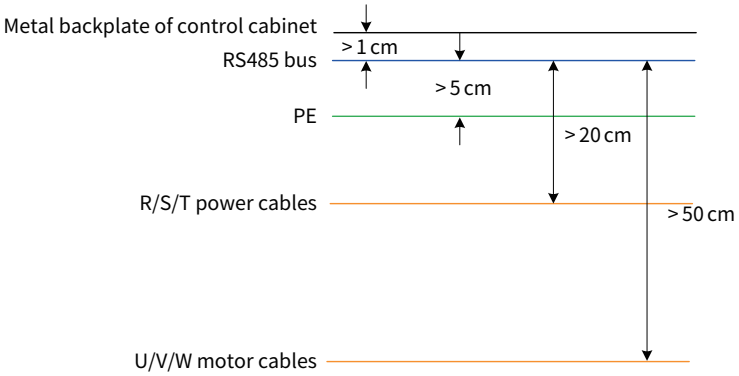

Figure 7-8 Cabling diagram

NOTE

- The distance between the RS485 bus and strong-current cables must be larger than 20 cm.
- The distance between the RS485 bus and U, V, W power cables must be larger than 50 cm.
- The distance between the RS485 bus and PE cables must be larger than 5 cm.
- The distance between the RS485 bus and the backplate of the metal cabinet must be greater than 1 cm.

7.1.3 Relationship Between RS485 Transmission Distance, Node, and Baud Rate

No.	Rate	Transmission distance	Number of Nodes	Cable Diameter
1	57.6 kbps	100 m	128	AWG26
2	19.2 kbps	1000 m	128	AWG26

CAUTION

- RS485 supports connection of up to 32 servo drives. To connect more servo drives, install an amplifier, which extends the number of servo drives networked to 247.
- If the host controller supports only RS232, use an RS232/RS485 converter.

7.1.4 Communication Parameter Setting

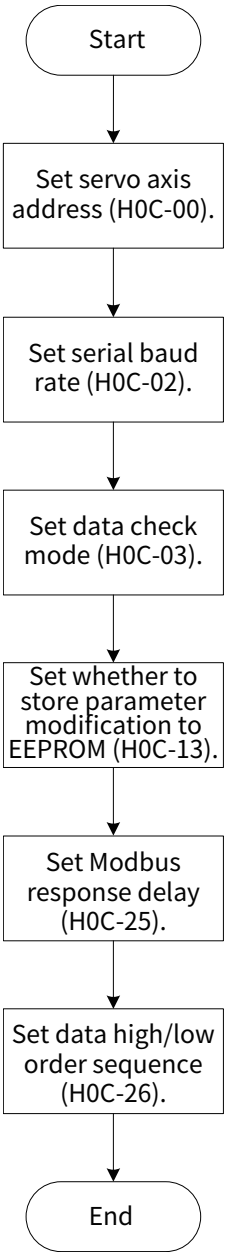

Figure 7-9 Flowchart of communication parameter setting

1 Set the servo drive axis address in H0C-00:

When multiple servo drives are networked, each servo drive has a unique address; otherwise, communication may fail. Where,

0: Broadcast address

1 to 127: slave addresses

The host controller writes all slave servo drives through the broadcast address. The slave servo drives act after receiving the frame with the broadcast address and do not return a response.

2 Set the communication rate between the servo drive and the host controller in H0C-02.

The baud rate set in the servo drive must be the same as that in the host controller. Otherwise, communication will fail.

In a network of multiple servo drives, if the baud rate of a certain servo drive is different from that of the host controller, communication error will occur in the servo drive and communication with other servo

drives will be affected.

3 Set the data check mode between the servo drive and the host controller during communication in H0C-03.

IS810P provides two data check modes: even check (H0C-03 set to 1) and odd check (H0C-03 set to 2). If H0C-03 is set to 0, no check is performed.

1) Even or odd check

Each frame actually includes 11 bits: 1 start bit, 8 data bits, 1 check bit, and 1 stop bit.

10	9	8 to 1	0
End bit	Check bit	Data bit	Start bit

2) No check

If no check is used, the data frame has two formats.

Each frame actually includes 11 bits: 1 start bit, 8 data bits, and 2 stop bits.

10 to 9	8 to 1	0
End bit	Data bit	Start bit

Each frame actually includes 11 bits: 1 start bit, 8 data bits, and 1 stop bit.

10	9	8 to 1	0
Invalid bit	End bit	Data bit	Start bit

The data is hexadecimal.

NOTE

◆ The host controller must use the preceding formats. Otherwise, communication with the servo drive fails.

4 Set whether to store parameter modification to EEPROM through communication in H0C-13.

The servo drive can store parameter settings in real time (H0C-13 set to 1). Modifications to parameters are stored in EEPROM in real time, which are retentive at power failure. Use this function with caution.

1) If a parameter setting needs to be modified only once, enable real-time storage (H0C-13 set to 1).
2) If a parameter setting needs to be modified frequently, you are recommended to disable real-time storage (H0C-13 set to 0). Otherwise, frequent writing EEPROM reduces its service life.

NOTE

◆ If EEPROM is frequently written in a certain period of time, the servo drive reports the warning Er.942 (Servo parameters frequently saved to EEPROM).

◆ After EEPROM is damaged, other non-resettable faults will occur in the servo drive.

5 Set the response delay of Modbus communication in H0C-25.

After receiving a command, the servo drive returns a response to the host controller after the delay defined in H0C-25.

6 Set the high/low order sequence of communication data in H0C-26.

The function code of the servo drive is displayed as HXX-YY.

Where,

XX: Parameter group No., in hexadecimal

YY: Offset within the parameter group, in decimal, converted into hexadecimal in the data frame

The parameter communication address of the servo drive is 16-bit data, consisting of the parameter group No. (high 8 bits) and offset (low 8 bits).

If the data range is –65536 to +65535, it is a 16-bit data, occupying only one offset within the parameter group and only one address, not involving the data high/low bit sequence. For example, the communication address of H02-00 is 0x0200.

If the data range is outside –65536 to +65535, it is a 32-bit data, occupying two consecutive offsets and two consecutive addresses. However, the communication address is determined by the address of the lower offset. The data high/low bit sequence must be set correctly. Otherwise, a data read/write error will occur.

For example, H11-12 (1st displacement) occupies two consecutive offsets: H11-12 and H11-13. The communication address 0x110C of the lower offset H11-12 stores low 16 bits of the parameter value, and the communication address 0x110D of the higher offset H11-13 stores high 16 bits of the parameter value.

If "1st displacement" is preset to 0x40000000 (1073741824 in decimal), H11-12 must be set to 0x0000 and H11-13 must be set to 0x4000.

When a parameter is written, the sequence of 0x0000 and 0x4000 in the communication frame is determined according to the setting of H0C-26.

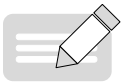

NOTE

◆ The servo drive does not permit separate operation on high 16 bits of a 32-bit parameter.

◆ When modifying a parameter through communication, pay attention to the setting range, unit, effective time, setting type, and positive/negative hexadecimal conversion. For details, see the description of the parameter.

CAUTION



◆ For the PLC/touchscreen of certain vendors, the register address for Modbus programming is the actual register address + 1. The reason is that the standard Modbus register start address is 1, but the register start address of these devices (for example, this servo drive) is actually 0. To ensure compatibility, PLC/touchscreen vendors make the register address deducted by 1 during physical transmission. Pay attention to this during Modbus communication between such PLC/touchscreen and the servo drive to ensure that parameters of the servo drive can be read or written correctly. For example, the register address read/written in programming is 0x0201, and the actual parameter read/written is H02-00 rather than H02-01.

◆ If you are not sure whether a PLC/touchscreen's register address for Modbus programming is the actual one, select two consecutive parameters of different values, and use command 0x03 to read the larger one. If the parameter value read is equal to the smaller parameter, it indicates that the register address for programming is equal to the actual register address + 1.

☆ Related parameters:

Para.	Name	Value Range	Unit	Function	Setting Condition	Effective Time	Default
H0C-00	Servo drive axis address	0 to 127	-	Sets the servo drive axis address.	During operation	Immediately	0
H0C-02	Baud rate of the serial port	0: 2400 1: 4800 2: 9600 3: 19200 4: 38400 5: 57600	kbp/s	Defines the communication rate between the servo drive and the host controller.	During operation	Immediately	5

H0C-03	Modbus data format	0: No check, two stop bits 1: Even check, one stop bit 2: Odd check, one stop bit 3: No check, one stop bit	-	Defines the data check mode between the servo drive and the host controller during communication.	During operation	Immediately	0
H0C-13	Update parameters written through Modbus communication to EEPROM	0: Not update 1: Update	-	Sets whether to store parameter modification to EEPROM.	During operation	Immediately	1
H0C-25	Modbus response delay	0 to 5000	ms		During operation	Immediately	1
H0C-26	Sequence of Modbus communication data bits	0: High 16 bits before low 16 bits 1: Low 16 bits before high 16 bits	-	Defines the 32-bit data transmission format of Modbus communication.	During operation	Immediately	1

7.1.5 Modbus Communication Protocol

The function codes of the servo drive include two data lengths: 16 bits and 32 bits. Function codes can be read or written by using the Modbus-RTU protocol. The command codes for writing vary with the data length.

Action	Command code
Read 16-bit or 32-bit function code	0x03
Write 16-bit function code	0x06
Write 32-bit function code	0x10

1 Read the function code: 0x03

The command code 0x03 in the Modbus-RTU protocol is used to read both 16-bit and 32-bit function codes.

Request frame format:

START	Equal to or greater than 3.5-character idle time, frame start
ADDR	Servo axis addresses 1 to 247 ◆ Note: 1 to 247 are decimals, which should be converted into hexadecimal when filled into ADDR.
CMD	Command code: 0x03
DATA[0]	Start parameter group No.. For example, 06 is the parameter group No. in H06-11. ◆ Note: 06 is hexadecimal, which does not need to be converted when filled into DATA[0].
DATA[1]	Start offset within the parameter group. For example, 11 is the offset in H06-11. ◆ Note: 11 is decimal, which should be converted into hexadecimal 0x0B when filled into DATA[1].
DATA[2]	Read number of functions codes (high 8 bits), hexadecimal
DATA[3]	Read number of functions codes (low 8 bits), hexadecimal
CRCL	CRC valid byte (low 8 bits)
CRCH	CRC valid byte (high 8 bits)
END	Equal to or greater than 3.5-character idle time, frame end

Response frame format:

START	Equal to or greater than 3.5-character idle time, frame start
ADDR	Servo axis address, hexadecimal
CMD	Command code: 0x03
DATALENGTH	Number of bytes of the function code, equal to the number of read function codes N x 2
DATA[0]	Start function code value, high 8 bits
DATA[1]	Start function code value, low 8 bits
DATA[…]	
DATA[N*2-1]	End function code value, low 8 bits

CRCL	CRC low valid byte
CRCH	CRC high valid byte
END	Equal to or greater than 3.5-character idle time, frame end

The command code 0x06 in the Modbus-RTU protocol is used to write 16-bit function codes and the command code 0x10 is used to write 32-bit function codes.

2 Write 16-bit function code (0x06)

CAUTION	
	◆ Do not use 0x06 to write 32-bit function codes. Otherwise, unexpected errors will occur.

Request frame format:

START	Equal to or greater than 3.5-character idle time, frame start
ADDR	Set servo axis addresses 1 to 247 ◆ Note: 1 to 247 are decimals, which should be converted into hexadecimal when filled into ADDR.
CMD	Command code: 0x06
DATA[0]	Parameter group No. to be written. For example, 06 is the parameter group No. in H06-11. ◆ Note: 06 is hexadecimal, which does not need to be converted when filled into DATA[0].
DATA[1]	Offset within the parameter group to be written. For example, 11 is the offset in H06-11. ◆ Note: 11 is decimal, which should be converted into hexadecimal 0x0B when filled into DATA[1].
DATA[2]	High byte of data to be written, hexadecimal
DATA[3]	Low byte of data to be written, hexadecimal
CRCL	CRC low valid byte
CRCH	CRC high valid byte
END	Equal to or greater than 3.5-character idle time, frame end

Response frame format:

START	Equal to or greater than 3.5-character idle time, frame start
ADDR	Servo axis address, hexadecimal
CMD	Command code: 0x06
DATA[0]	Parameter group No. to be written. For example, it is 0x06 for H06-11.
DATA[1]	Offset in the parameter group No. to be written. For example, it is 0x0B for H06-11.
DATA[2]	High byte of data to be written, hexadecimal
DATA[3]	Low byte of data to be written, hexadecimal
CRCL	CRC low valid byte
CRCH	CRC high valid byte

END	Equal to or greater than 3.5-character idle time, frame end

3 Write 32-bit function code (0x10)

CAUTION	
	◆ Do not use 0x10 to write 16-bit function codes. Otherwise, unexpected errors will occur.

Request frame format:

START	Equal to or greater than 3.5-character idle time, frame start
ADDR	Servo axis addresses 1 to 247 ◆ Note: 1 to 247 are decimals, which should be converted into hexadecimal when filled into ADDR.
CMD	Command code: 0x10
DATA[0]	Start parameter group No. to be written. For example, 11 is the parameter group No. in H11-12. ◆ Note: 11 is hexadecimal, which does not need to be converted when filled into DATA[0].
DATA[1]	Start offset within the parameter group to be written. For example, 12 is the offset in H11-12. ◆ Note: 12 is decimal, which should be converted into hexadecimal 0x0C when filled into DATA[1].
DATA[2]	High 8 bits M(H) of the number of function codes. The length of a 32-bit function code is 2.
DATA[3]	Low 8 bits M(L) of the number of function codes
DATA[4]	Number of bytes M x 2 corresponding to the number of function codes. For example, for H05-07, DATA[4] is H04.
DATA[5]	High 8 bits of the start function code to be written, hexadecimal
DATA[6]	Low 8 bits of the start function code to be written, hexadecimal
DATA[7]	High 8 bits of the start offset in the parameter group to be written + 1, hexadecimal
DATA[8]	Low 8 bits of the start offset in the parameter group to be written + 1, hexadecimal
CRCL	CRC low valid byte
CRCH	CRC high valid byte
END	Equal to or greater than 3.5-character idle time, frame end

Response frame format:

START	Equal to or greater than 3.5-character idle time, frame start
ADDR	Servo axis address, hexadecimal
CMD	Command code: 0x10
DATA[0]	Parameter group No. to be written. For example, it is 0x11 for H11-12.
DATA[1]	Offset in parameter group No. to be written. For example, it is 0x0C for H11-12.
DATA[2]	High 8 bits of the number of function codes to be written
DATA[3]	Low 8 bits of the number of function codes to be written
CRCL	CRC low valid byte
CRCH	CRC high valid byte
END	Equal to or greater than 3.5-character idle time, frame end

4 Error response frame

Error response frame format:

START	Equal to or greater than 3.5-character idle time, frame start
ADDR	Servo axis address, hexadecimal
CMD	Command code + 0x80
DATA[0] to DATA[3]	DATA | error code
CRCL	CRC low valid byte
CRCH	CRC high valid byte
END	Equal to or greater than 3.5-character idle time, frame end

Error code:

Error code	Code description
0x0001	Illegal command code
0x0002	Illegal data address
0x0003	Illegal data
0x0004	Slave device fault

5 Communication example (H0C-26 set to 0)

1) Master request frame

01	03	02	02	00	02	CRCL	CRCH

The request frame means that the master reads data of 0x0002 word length from the register with the start function code H02-02 in the servo drive of axis address 01.

Slave response frame:

01	03	04	00	01	00	00	CRCL	CRCH

This response frame means that the slave returns data of 2 word length (4 bytes), and the data content is 0x0001, 0x0000.

If the slave response frame is:

01	83	02	CRCL	CRCH

The response frame means that a communication error occurs, and the error code is 0x02. 0x83 indicates the error.

2) Master request frame:

01	06	02	02	00	01	CRCL	CRCH

The request frame means that the master writes 0x0001 to the function code H02-02 in the servo drive of axis address 01.

Slave response frame:

01	06	02	02	00	01	CRCL	CRCH

The response frame means that the master writes the function code successfully.

If the slave response frame is:

01	86	02	CRCL	CRCH

The response frame means that a communication error occurs, and the error code is 0x02. 0x86 indicates the error.

3) Read 32-bit function code (H05-07)

Master request frame:

01	03	05	07	00	02	CRCL	CRCH

Slave response frame:

01	03	04	00	01	00	00	CRCL	CRCH

The response frame means that the value of the function code H05-07 is 0x00000001.

6 Addressing of 32-bit function code

When 32-bit function codes are read or written through Modbus, the communication address is the address of the lower offset, and operation is performed on both the two function code numbers.

For example, the Modbus command for reading H11-12 (1st displacement) is:

Servo axis address	03	11	0C	00	02	CRCL	CRCH

If it is known that the 1st displacement is 0x40000000 (1073741824 in decimal):

When H0C-26 is 1 (low 16 bits before high 16 bits), then the response frame is:

Servo axis address	03	04	00	00	40	00	CRCL	CRCH

When H0C-26 is 0 (high 16 bits before low 16 bits), then the response frame is:

Servo axis address	03	04	40	00	00	00	CRCL	CRCH

For example, the Modbus command for writing 0x12345678 (1st displacement) is:

When H0C-26 is 1 (low 16 bits before high 16 bits)

Servo axis address	10	11	0C	00	02	04	56	78	12	34	CRCL	CRCH

When H0C-26 is 0 (high 16 bits before low 16 bits)

Servo axis address	10	11	0C	00	02	04	12	34	56	78	CRCL	CRCH

For example, to write 0x00100000 (1048576 in decimal) to the 32-bit function code H05-07:

When H0C-26 is 0 (high 16 bits before low 16 bits), then the response frame is:

01	10	05	07	00	02	04	00	00	00	10	CRCL	CRCH

7 CRC check

The host controller and servo drive must use the same CRC algorithm for communication. Otherwise, a CRC error will occur. The servo drive uses 16-bit CRC with low byte before high byte. The CRC function is as follows:

```
Uint16 COMM_CrcValueCalc(const Uint16 *data, Uint16 length)
{
  Uint16 crcValue = 0xffff;
  int16 i;
  while (length--)
  {
    crcValue ^= *data++;
    for (i = 0; i < 8; i++)
    {
      if (crcValue & 0x0001)
      {
        crcValue = (crcValue >> 1) ^ 0xA001;
      }
      else
      {
        crcValue = crcValue >> 1;
      }
    }
  }
  return (crcValue);
}
```

8 Expression of signed hexadecimal

When signed function codes (16-bit and 32-bit) are written, the pre-written data needs to be converted into hexadecimal.

1) Write 16-bit function code

Data is positive or 0: Complement = True form

Data is negative: Complement = 0xFFFF – Complement of data absolute value + 0x0001

Example:

16-bit signed positive +100: The true form is 0x0064 and the complement is also 0x0064.

16-bit signed negative –100: The hexadecimal complement is 0xFFFF – 0x0064 + 0x0001 = FF9C.

2) 32-bit function code

Data is positive or 0: Complement = True form

Data is negative: Complement = 0xFFFFFFFF – Complement of data absolute value + 0x00000001

Example:

32-bit signed positive +100: The true form is 0x00000064 and the complement is also 0x00000064.

32-bit signed negative –100: The hexadecimal complement is 0xFFFFFFFF – 0x00000064 + 0x00000001 = FFFFFF9C.

7.1.6 RS485 Communication Troubleshooting

1 Problem 1: Termination resistor connection

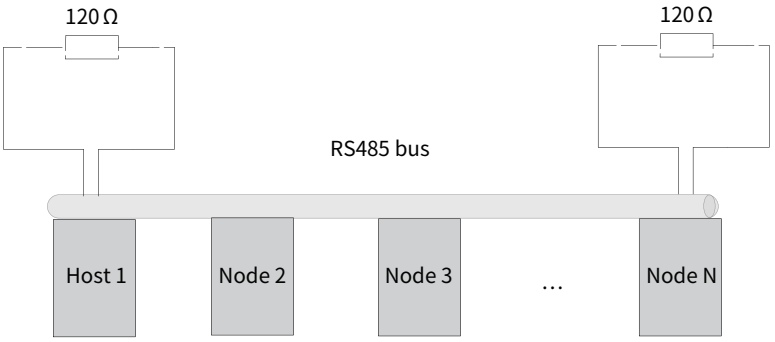

Figure 7-10 Correct termination resistor connection diagram

NOTE

- The termination resistor can be connected only at two ends of the bus.
- The master station must be arranged at one end of the bus.
- When the resistance of the RS485 bus measured by the multimeter is about 60 Ω (all devices must be powered off during measurement), the bus is normal. If the measured resistance is lower than 50 Ω, check two ends of the bus, and check whether another termination resistor is added. If yes, disconnect the resistor. If the measured resistance is 0 Ω, check for short circuit or node damage.

2 Problem 2: Correct wiring method (for nodes without the GND terminal)

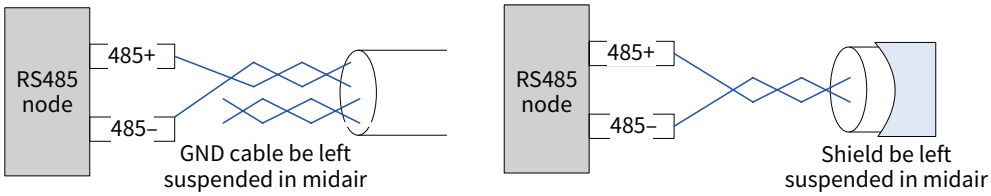

Figure 7-11 Wiring diagram for nodes without the GND terminal

Method 1: Check whether another port on this node shares a common reference ground with the RS485 circuit. If yes, connect GND to this reference ground. Note that the shield must not be connected to the reference ground; otherwise, the RS485 port will be damaged.

Method 2: Check whether there is a reference ground used by the RS485 circuit on the board of this node. If yes, connect GND to this reference ground. Note that the shield must not be connected to the reference ground; otherwise, the RS485 port will be damaged.

Method 3: If no reference ground of the RS485 circuit is found, leave the GND cable unconnected as shown in the preceding figure, and ensure that the PE cable is connected reliably.

Method 4: When there are not many nodes, connect a filter capacitor between RS485+ and RS485–.

3 Problem 3: Correct multi-node connection mode

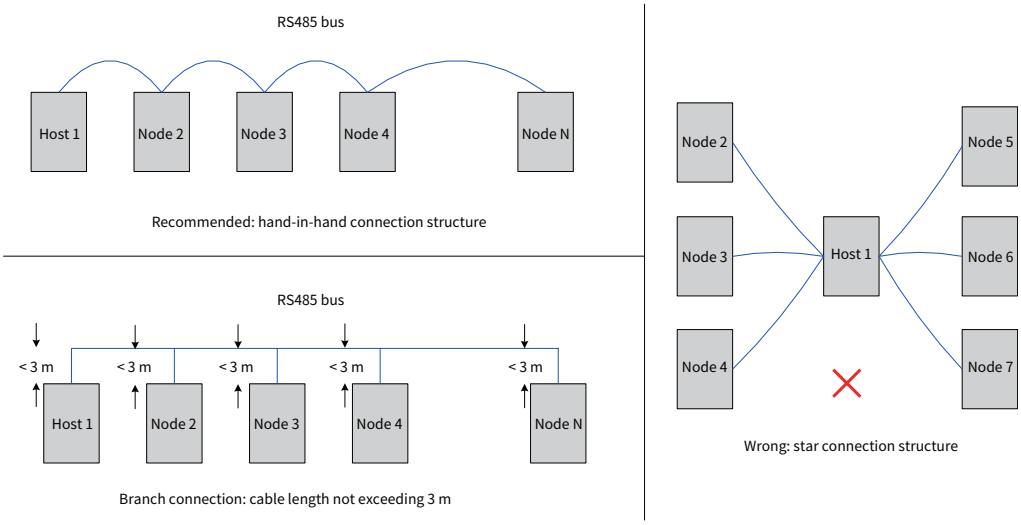

Figure 7-12 Multi-node connection mode diagrams

4 Problem 4: Suppressing interference from external systems

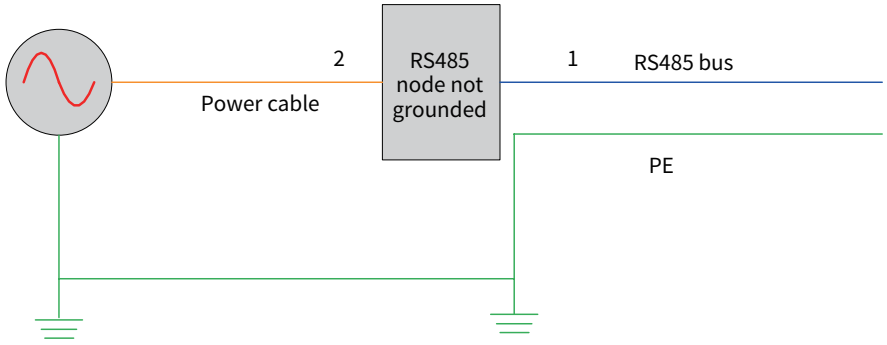

Figure 7-13 Diagram of suppressing external interference

Method 1: Add a magnetic ring at position 1, which can effectively suppress external interference. This method is recommended.

Method 2: Add a magnetic ring at position 2, which can also suppress external interference.

5 Problem 5: Suppressing drive interference

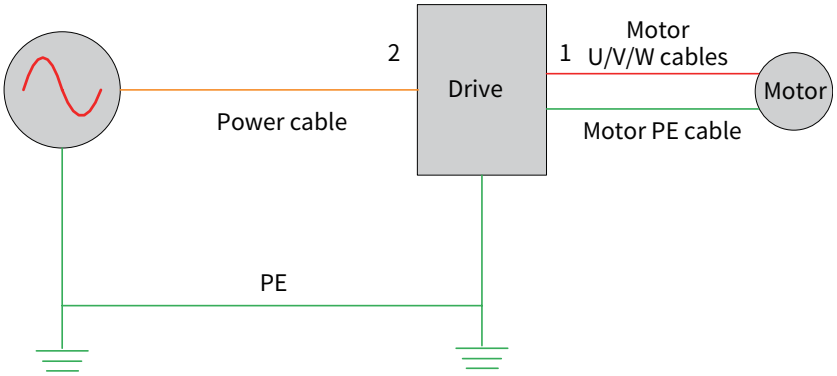

Figure 7-14 Diagram of suppressing drive interference

Method 1: Add a filter magnetic ring at position 1, with the U, V, W cables (not including the PE cable) passing through the magnetic ring and winding three coils. This method has the best effect and is recommended.

Method 2: Add a filter magnetic ring at position 2, with the U, V, W cables (not including the PE cable) passing through the magnetic ring and winding three coils.

The following figure shows the troubleshooting flowchart:

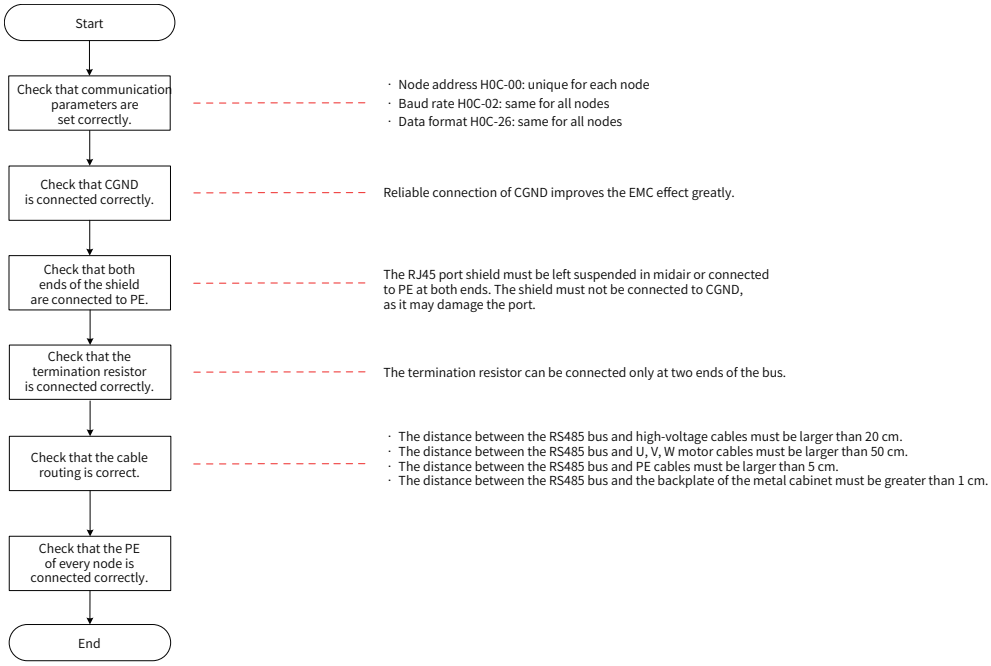

Figure 7-15 RS485 communication problem troubleshooting flowchart

7.2 CANlink Communication

CANlink is a communication protocol developed by Inovance for embedded systems used in automation. In terms of the OSI model, CANlink implements layers above and including the network layer. The underlying protocol implementing the data link and physical layers is usually Controller Area Network (CAN).

CANlink supports network management, device monitoring, and communication between nodes. CANlink supports the master/slave mode. Each master and slave must have a unique address among 1 to 63. IS810P only supports the slave mode and only one master node in the network.

7.2.1 Hardware Connection

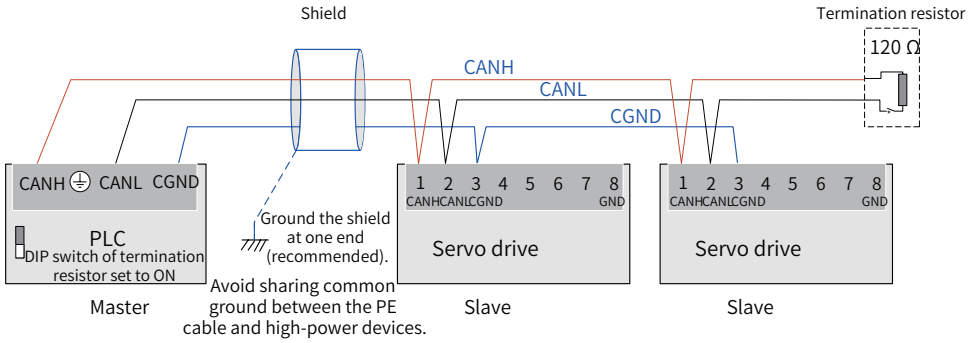

Figure 7-16 CANlink wiring diagram

Table 7-1 Relationship between CANlink communication distance and baud rate

Baud Rate (kbps)	Max. Distance (m)	Cable Size (mm^2)	Max. Number of Nodes
1000	20	⩾ 0.3	18
500	80	⩾ 0.3	62
250	150	⩾ 0.3	62
125	300	⩾ 0.5	62
100	500	⩾ 0.5	62
50	1000	⩾ 0.7	62

NOTE

◆ Above is based on standard shielded twisted pairs.

7.2.2 CANlink Communication Parameter Setting

Para.	Name	Value Range	Function	De-fault	Effective Time	Setting Condition
H0C-00	Servo axis address	1 to 127 0: Broad-cast address	Sets the servo drive axis address. 0: Broadcast address. The host controller writes all servo drives through the broadcast address. The servo drives act after receiving the frame with the broadcast address and do not return a response. 1 to 247: When multiple servo drives are networked, each servo drive has a unique address; otherwise, communication may fail.	1	Immediately	During operation

<table>
<tr><th>Para.</th><th>Name</th><th>Value Range</th><th>Function</th><th>De-fault</th><th>Effective Time</th><th>Setting Condition</th></tr>
<tr><td>H0C-08</td><td>CAN communication rate</td><td>0 to 7</td><td>Defines the communication rate between the drive and the host controller in the CANlink or CANopen mode.
<table><tr><th>Value</th><th>Communication Rate</th></tr><tr><td>0</td><td>20 k</td></tr><tr><td>1</td><td>50 k</td></tr><tr><td>2</td><td>100 k</td></tr><tr><td>3</td><td>125 k</td></tr><tr><td>4</td><td>250 k</td></tr><tr><td>5</td><td>500 k</td></tr><tr><td>6</td><td>1 M</td></tr><tr><td>7</td><td>1 M</td></tr></table>The communication rates of the servo drive and the host controller must be the same; otherwise, the communication fails.</td><td>5</td><td>Immediately</td><td>During operation</td></tr>
<tr><td>H0C-13</td><td>Update parameters written through CAN communication to EEPROM</td><td>0 to 1</td><td>Sets whether to store parameters written through communication to EEPROM.
<table><tr><th>Value</th><th>Meaning</th></tr><tr><td>0</td><td>Not update parameters to EEPROM</td></tr><tr><td>1</td><td>Update parameters except for groups H0B and H0D to EEPROM</td></tr></table>Note:
Modification to H0C-13 will always be updated to EEPROM.
If you do not want to retain parameter modifications upon power failure, set H0C-13 to 0. Otherwise, if a great number of parameter settings are modified and the modifications are updated to EEPROM, EEPROM will be damaged and the servo drive reports the error Er.108 (Parameter storage fault).</td><td>0</td><td>Immediately</td><td>During operation</td></tr>
</table>

7.2.3 CANlink Communication Troubleshooting

Er.D03: CAN communication interrupted

Cause:

The CAN communication times out.

Cause	Method of Verification	Measure
CAN communication is interrupted. The slave station is offline.	Check the CAN communication card indicator status of the master PLC. The ERR indicator of the master PLC flashes at a frequency of 1 Hz and the ERR indicator of some slave PLCs is steady on. When using the PLC software tool, you can monitor D78xx in the component monitoring table of the master. xx indicates the station No. in decimal. If the corresponding D78xx of some configured stations is 5, a fault occurs on the slave PLC.	Check the communication cable connection between the slave with the ERR indicator steady on and the master. Set the communication baud rate (H0C-08) of the slave with the ERR indicator steady on to be the same as that of the master.

CAN communication is interrupted. The master station is offline	Check the CAN communication card indicator status of the master PLC. The ERR indicator of all slave PLCs are steady on. When using the PLC software tool, you can monitor D78xx in the component monitoring table of the master. xx indicates the station No. in decimal. If the corresponding D78xx of all configured stations is 5, a fault occurs on the master PLC.	Check cable connection of the master.

Er.994: CAN address conflict

Cause	Method of Verification	Measure
CANlink address conflict occurs.	Check whether H0C-00 (servo axis address) is allocated repeatedly.	Allocate servo axis address of slaves and ensure that allocation of H0C-00 is not repeated.

7.3 CANopen Communication

CANopen is a communication protocol and device profile specification for embedded systems used in automation. In terms of the OSI model, CANopen implements layers above and including the network layer. The CANopen standard consists of an addressing scheme, several small communication protocols, and an application layer defined by a device profile. CANopen supports network management, device monitoring, and communication between nodes, including a simple transmission layer for message segmentation or de-segmentation. The underlying protocol implementing the data link and physical layers is usually Controller Area Network (CAN).

CANopen supports the master/slave mode. Each master and slave must have a unique address among 1 to 63. IS810P only supports the slave mode and only one master node in the network.

7.3.1 Hardware Connection

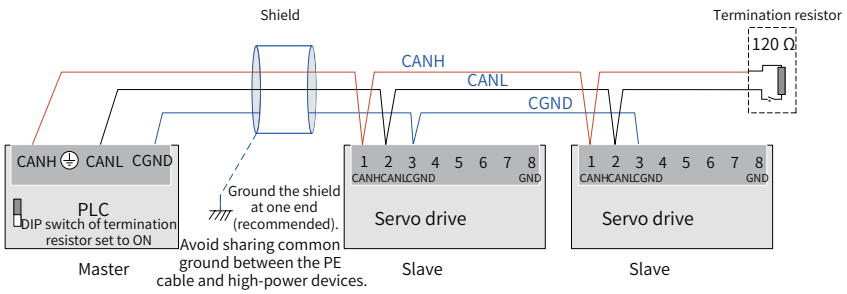

Figure 7-17 CANopen wiring diagram

Table 7-2 Relationship between CANopen communication distance and baud rate

Baud Rate (kbps)	Max. Distance (m)	Cable Size (mm^2)	Max. Number of Nodes
1000	20	⩾ 0.3	18
500	80	⩾ 0.3	62
250	150	⩾ 0.3	62
125	300	⩾ 0.5	62
100	500	⩾ 0.5	62
50	1000	⩾ 0.7	62

NOTE

◆ Above is based on standard shielded twisted pairs.

7.3.2 CANopen Communication Parameter Setting

<table>
<tr><th>Para.</th><th>Name</th><th>Value Range</th><th>Function</th><th>Default</th><th>Effective Time</th><th>Setting Condition</th></tr>
<tr><td>H02-00</td><td>Control mode</td><td>0 to 8</td><td>Sets the control mode of the servo drive.
0: Speed mode
1: Position mode
2: Torque mode
3: Torque mode ↔ Speed mode
4: Speed mode ↔ Position mode
5: Torque mode ↔ Position mode
6: Torque mode ↔ Speed mode ↔ Position mode
8: CANopen control mode</td><td>8</td><td>Immediately</td><td>At stop</td></tr>
<tr><td>H0C-00</td><td>Servo axis address</td><td>1 to 127</td><td>Sets the servo drive axis address.
0: Broadcast address. The host controller writes all servo drives through the broadcast address. The servo drives act after receiving the frame with the broadcast address and do not return a response.
1 to 247: When multiple servo drives are networked, each servo drive has a unique address; otherwise, communication may fail.</td><td>1</td><td>Immediately</td><td>During operation</td></tr>
<tr><td>H0C-08</td><td>CAN communication rate</td><td>0 to 7</td><td>Defines the communication rate between the drive and the host controller in the CANlink or CANopen mode.
<table><tr><th>Value</th><th>Communication Rate</th></tr><tr><td>0</td><td>20 k</td></tr><tr><td>1</td><td>50 k</td></tr><tr><td>2</td><td>100 k</td></tr><tr><td>3</td><td>125 k</td></tr><tr><td>4</td><td>250 k</td></tr><tr><td>5</td><td>500 k</td></tr><tr><td>6</td><td>1 M</td></tr><tr><td>7</td><td>1 M</td></tr></table>The communication rates of the servo drive and the host controller must be the same; otherwise, the communication fails.</td><td>5</td><td>Immediately</td><td>During operation</td></tr>
<tr><td>H0C-13</td><td>Update parameters written through CAN communication to EEPROM</td><td>0 to 1</td><td>Sets whether to store parameters written through communication to EEPROM.
<table><tr><th>Value</th><th>Update Parameters Written Through Communication to EEPROM</th></tr><tr><td>0</td><td>Not update parameters to EEPROM</td></tr><tr><td>1</td><td>Update parameters except for groups H0B and H0D to EEPROM</td></tr></table>Note:
Modification to H0C-13 will always be updated to EEPROM.
If you do not want to retain parameter modifications upon power failure, set H0C-13 to 0. Otherwise, if a great number of parameter settings are modified and the modifications are updated to EEPROM, EEPROM will be damaged and the servo drive reports the error Er.108 (Parameter storage fault).</td><td>0</td><td>Immediately</td><td>During operation</td></tr>
</table>

7.3.3 CANopen Communication Troubleshooting

Fault Display	Name	Cause	Measure
Er.d04	Node protection or heartbeat timeout	The slave reaches the time configured by the consumer or the node guarding time.	Check whether all CAN nodes are online, or check the CANopen configuration, and reset the node or communication.
Er.d05	NMT initialization at motor energized	The network management system (NMT) initialization frame is received when the motor is energized.	Reset the NMT node. The polarity output is inhibited when the NMT is being changed.
Er.d06	NMT stop at motor energized	The NMT stop frame is received when the motor is energized.	Reset the NMT node. The polarity output is inhibited when the NMT is being changed.
Er.d07	CANopen network disconnected	There are too many errors.	Check the CANopen network and restore the connection.
Er.d08	PDO transmission length error	The length of the content transmitted by the PDO is inconsistent with the mapping length during configuration.	Re-configure the PDO and reset the node or communication.
Er.d09	Incorrect software position upper and lower limit setting	The lower limit of software position is larger than the upper limit.	Set 0x607D correctly and ensure 607D-1h < 607D-2h
Er.d10	Home offset setting error	The home offset is outside the software position upper or lower limit.	Set 607D and 607C correctly, and ensure 607C > (607D-1h) 607C < (607D-2h)
Er.d11	Excessive sync period error	The synchronization cycle error exceeds the 1/4 of the setpoint.	Check the settings of 60C2-1h and 60C2-2h and ensure the synchronization cycle parameters are set properly. Ensure the synchronization cycle of the host controller is set correctly and consistent with the setting of 60C2h. Check the wiring between the slave and the master.

7.4 VDI/VDO

1 VDI Terminal

The virtual digital input (VDI) terminal is similar to hardware DIs and can be allocated with the DI functions. When a VDI is enabled, the number of hardware DIs are expanded. A total of 16 VDIs are supported.

The following figure takes the operation of allocating FunIN.1 (S-ON) to a VDI as an example to describe the VDI setting procedure.

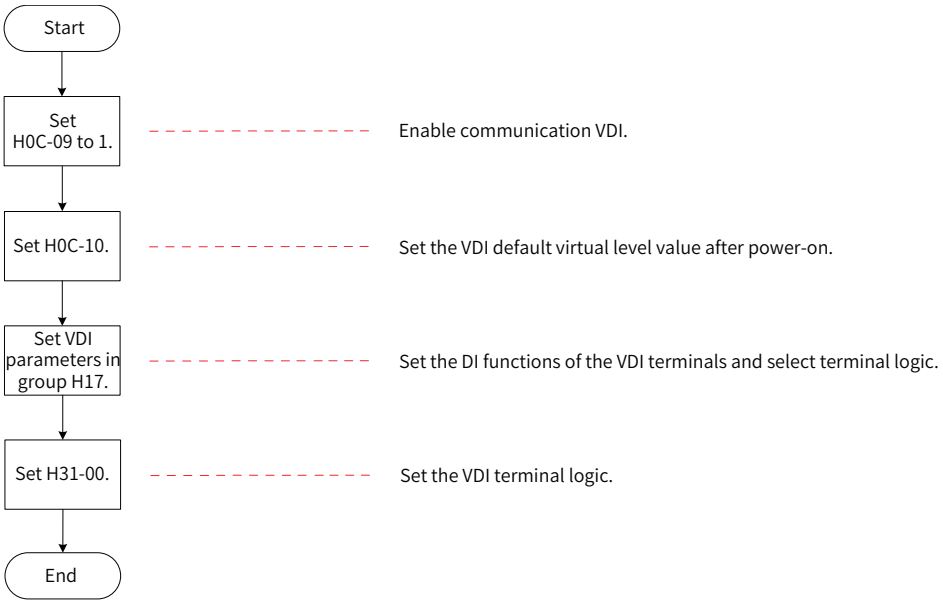

Figure 7-18 VDI use flowchart

The VDI logic is determined by H0C-10 (Default VDI virtual level value upon power-on) upon initial power-on. Thereafter, the VDI logic is determined by H31-00 (VDI virtual level).

The value of H0C-10 displayed on the keypad is decimal, and H31-00 is not displayed on the keypad. In the converted binary value of H0C-10 (H31-00), "bit(n) = 1" indicates that the logic of VDI (n+1) is "1" and "bit(n) = 0" indicates that the logic of VDI (n+1) is "0".

CAUTION

◆ If a VDI is allocated with the same function (not 0) as a DI in group H03, the servo drive reports Er.130.

◆ The VDIx logic "0" indicates active high and "1" indicates edge valid.

☆ Related parameters:

Para.		Name	Value Range	Function	Setting Condition	Effective Time	Default
H0C	09	Communication VDI	0 to 1	Sets whether to enable communication VDI.	At stop	Immediately	0
H0C	10	VDI default value upon power-on	0 to 65535	Sets the VDI default value upon power-on.	At stop	Next power-on	0
H31	00	VDI virtual level set through communication	Bit0: VDI1 virtual level ... Bit15: VDI16 virtual level	Sets the VDI terminal logic.	During operation	Immediately	-

2 VDO Terminal

The virtual digital output (VDO) is similar to hardware DOs and can be allocated with the DO functions. When a VDO is enabled, the number of hardware DOs are expanded. A total of 16 VDOs are supported.

Use VDOs according to the following procedure:

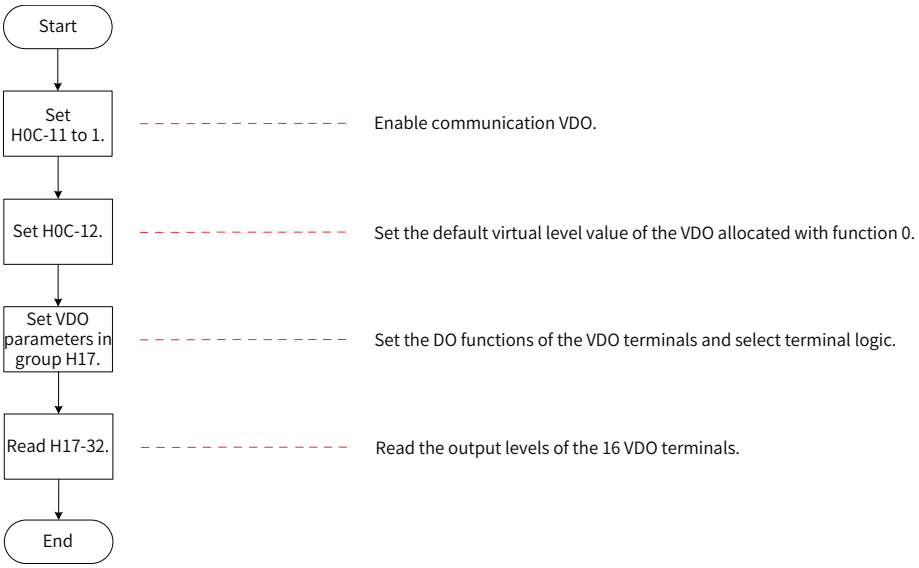

Figure 7-19 VDO use flowchart

The value of H0C-12 (H17-32) displayed on the keypad is hexadecimal. In the converted binary value of H0C-12 (H17-32), "bit(n) = 1" indicates that the logic of VDO (n+1) is "1" and "bit(n) = 0" indicates that the logic of VDO (n+1) is "0". You are recommended to set the VDO logic levels opposite to H0C-12.

CAUTION	
	◆ The VDOx logic "0" indicates active high and "1" indicates active low.

☆ Related parameters:

Para.		Name	Value Range	Function	Setting Condition	Effective Time	Default
H0C	11	Communication VDO	0 to 1	Sets whether to enable communication VDO.	At stop	Immediately	0
H0C	12	Default level of the VDO allocated with function 0	0 to 65535	Sets the default virtual level of the VDO allocated with function 0 (invalid).	At stop	Immediately	0
H17	32	VDO virtual level	Bit0: VDO1 virtual level ... Bit15: VDO16 virtual level	Reads the VDO output logic.	At display	-	0

Chapter 8 CANopen Communication Cases

8.1 PROFINET-to-CANopen Gateway of MD810 Power Supply Unit

8.1.1 PROFINET-to-CANopen Gateway

The PROFINET-to-CANopen function is implemented in the MD810 power supply unit to convert PROFINET to the CANopen protocol. The following figure shows the basic network structure.

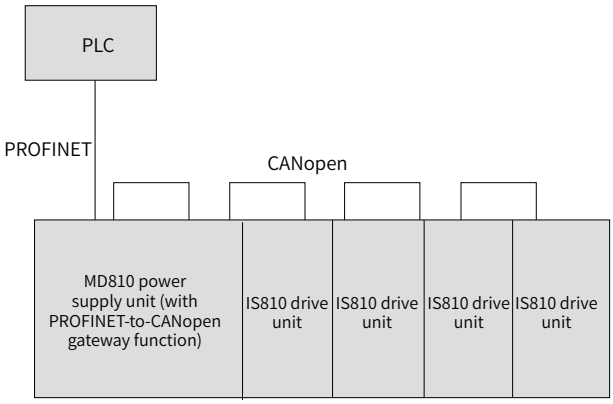

The gateway function implements data exchange for a total of 30 nodes (including the power supply unit). Detailed data is as follows.

1) For the power supply unit: The gateway function supports three RPDOs and three TPDOs, each with a maximum of 24 bytes.

2) For the IS810 drive unit: The gateway function supports a maximum of 29 bodes, each of which can be configured with four RPDOs and four TPDOs, each with a maximum of 32 bytes. The total number of RPDOs and TPDO configured for the 29 nodes cannot exceed 63. The maximum input and output data length supported by the 29 nodes is 504 bytes (63 x 8).

8.1.2 PROFINET-to-CANopen Gateway with Siemens S7-1500 PLC

The hardware configuration described in this section is based on the following models:

Inovance MD810 power supply unit with a gateway, model: MD81020M4T22G120

Inovance IS810P-CO CANopen bus servo, model: IS810P50M4T005CO

Inovance standard servo motor, model: ISMH2-15C30CD-U231Y

Siemens PROFINET bus PLC, model: S7-1500

1 Servo configuration

■ Preparations

1) Check whether the MD810 power supply unit is equipped with the PROFINET gateway (PROFINET interface), and ensure that the drive unit supports the CANopen bus.

2) Ensure that the main circuit is correctly connected, including three-phase input, inter-unit bridging,

and output motor connection.

3) Connect the network cable correctly.

Connect the PROFINET interface of the MD810 power supply unit to that of the PLC through a network cable.

Connect the RJ45 network interface of the MD810 power supply unit to that of the drive units through a network cable.

Adjust the DIP switch of the MD810 power supply unit. Turn on switches 3 and 4 for CAN.

Connect the last drive unit to a termination resistor. Otherwise, the CANopen communication may be abnormal and the alarm EA16.13 may be reported.

■ Communication parameter setting

1) Power supply unit (master):

① Set Fd-10 (Communication protocol selection) to 5 (PROFINET-to-CANopen gateway).

② Set Fd-12 (CAN baud rate) to 5. In this example, Fd-12 is set to 5, so the baud rate is 500 kbps.

③ Set Fd-13 (Station No.) to 1 to set node 1 as the master.

2) IS810 drive unit (slave):

① Set H0C-45 (Communication protocol selection) to 1 (CANopen).

② Set H0C-02 (CAN baud rate) to 5. In this example, H0C-02 is set to 5, so the baud rate is 500 kbps. The setting must be consistent between the slave and the master.

③ Set H0C-00 (Station No.) to any value other than 1.

■ Process data transmission configuration (after CANopen network cables of IS810 and MD810 are connected)

The CANopen transmission parameters related to the IS810 servo drive unit belong to groups 2D and 2E. The following table lists the mappings.

OUT	RPDO	Group 2D Address		INPUT	TPDO	Group 2E Address	
OUT	RPDO1	Number of mapping objects	2D-32	INPUT	TPDO1	Number of mapping objects	2E-20
		OUT1	2D-33			INPUT1	2E-21
			2D-34				2E-22
		OUT2	2D-35			INPUT2	2E-23
			2D-36				2E-24
		OUT3	2D-37			INPUT3	2E-25
			2D-38				2E-26
		OUT4	2D-39			INPUT4	2E-27
			2D-40				2E-28
	RPDO2	Number of mapping objects	2D-49		TPDO2	Number of mapping objects	2E-37
		OUT5	2D-50			INPUT5	2E-38
			2D-51				2E-39
		OUT6	2D-52			INPUT6	2E-40
			2D-53				2E-41
		OUT7	2D-54			INPUT7	2E-42
			2D-55				2E-43
		OUT8	2D-56			INPUT8	2E-44
			2D-57				2E-45
OUT	RPDO3	Number of mapping objects	2D-66	INPUT	TPDO3	Number of mapping objects	2E-54
		OUT9	2D-67			INPUT9	2E-55
			2D-68				2E-56
		OUT10	2D-69			INPUT10	2E-57
			2D-70				2E-58
		OUT11	2D-71			INPUT11	2E-59
			2D-72				2E-60
		OUT12	2D-73			INPUT12	2E-61
			2D-74				2E-62
	RPDO4	Number of mapping objects	2D-83		TPDO4	Number of mapping objects	2E-71
		OUT13	2D-84			INPUT13	2E-72
			2D-85				2E-73
		OUT14	2D-86			INPUT14	2E-74
			2D-87				2E-75
		OUT15	AF-88			INPUT15	2E-76
			AF-89				2E-77
		OUT16	AF-90			INPUT16	2E-78
			AF-91				2E-79

1) You can configure up to 32-byte RPDO and 32-byte TPDO process data. Each PDO can be configured with process data not exceeding 8 bytes in length.

2) Example of using PDOs to configure the servo parameters:

Assume that you want to assign values to servo parameters H11-12 and H11-14 through the PLC. The val-

ue of H11-12 consists of 32 bits, and that of H11-14 consists of 16 bits. You can plan a configuration method as needed. Two configuration methods are described below.

Configuration method 1:

RPDO	2D Address	Para.	Setting	Remarks	
RPDO1	Number of mapping objects	2D-32		2	
	OUT1	2D-33	H11.12	2011	1st displacement
		2D-34		0D20	32 bits
	OUT2	2D-35	H11.14	2011	1st speed
		2D-36		0F10	16 bits
	OUT3	2D-37			
		2D-38			
	OUT4	2D-39			
		2D-40			

Configuration method 2:

RPDO	2D Address	Para.	Setting	Remarks	
RPDO1	Number of mapping objects	2D-32		1	
	OUT1	2D-33	H1112	2011	1st displacement
		2D-34		0D20	32 bits
	OUT2	2D-35			
		2D-36			
	OUT3	2D-37			
		2D-38			
	OUT4	2D-39			
		2D-40			
RPDO2	Number of mapping objects	2D-49		1	
	OUT5	2D-50	H1114	2011	1st speed
		2D-51		0F10	16 bits
	OUT6	2D-52			
		2D-53			
	OUT7	2D-54			
		2D-55			
	OUT8	2D-56			
		2D-57			

Configuration principle:

The setting corresponding to H11-12 is 20110D20 and the setting corresponding to H11-14 is 20110F10. The following takes H11-12 as an example to explain the configuration principle.

① H11 value + 0x2000 = 0x2011. Enter 0x2011 in the high bits of OUT1.

② The parameter number 12 is in decimal, which is 0x0C in hexadecimal. An offset of 1 is required, and the final result is 0x0D.

③ 32-bit parameters correspond to 0x20, 16-bit parameters correspond to 0x10, and 8-bit parameters correspond to 0x08. Therefore, H1112 corresponds to 0x20.

④ Combine 0x0D and 0x20 obtained in the preceding steps to 0x0D20 and enter it in the low bits of OUT1.

3) Example of using PDOs to configure the object dictionary:

Assume that you want to read object dictionary 0x6077-12 from the servo through the PLC. The data type is 16-bit. No offset is required by object dictionaries. The following table lists the formats.

TPDO	2E Address	Para.	Setting	Remarks	
TPDO4	Number of mapping objects	2E-20	1		
	INPUT1	2E-21	6077		1st speed
		2E-22	1210	16 bits	16 bits
	INPUT2	2E-23			
		2E-24			
	INPUT3	2E-25			
		2E-26			
	INPUT4	2E-27			
		2E-28			

2 PLC configuration

1) Install the GSD file

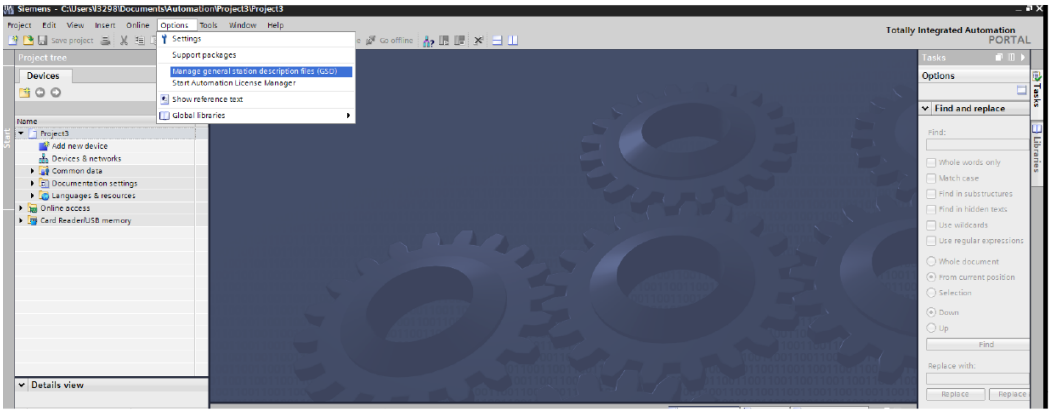

2) Select and install the matched GSD file. A prompt is displayed if the GSD file is not installed.

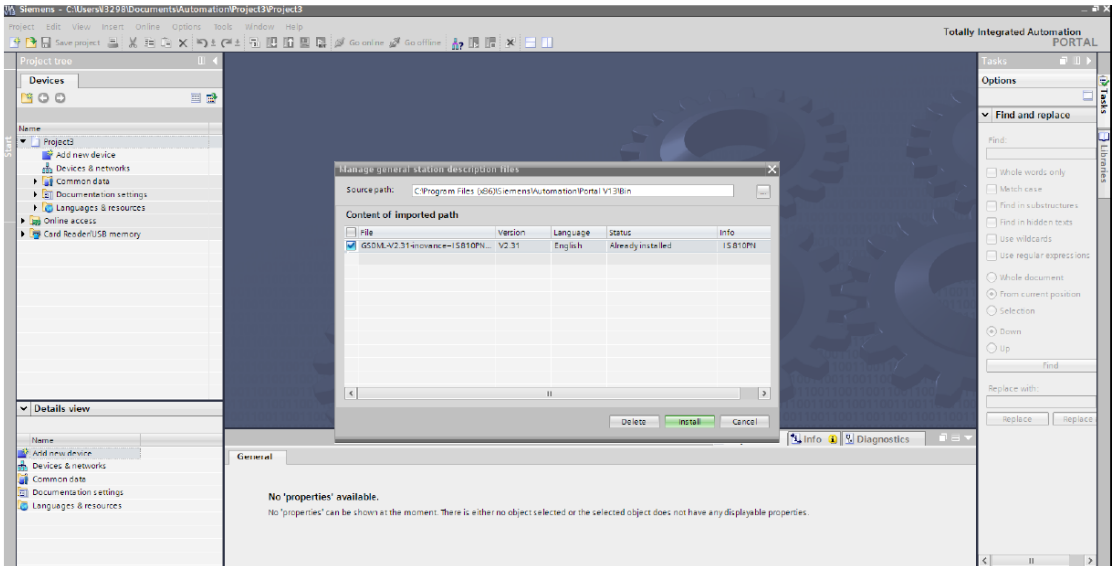

3) Project configuration

① Add a new device. Add a PLC based on the actual situation.

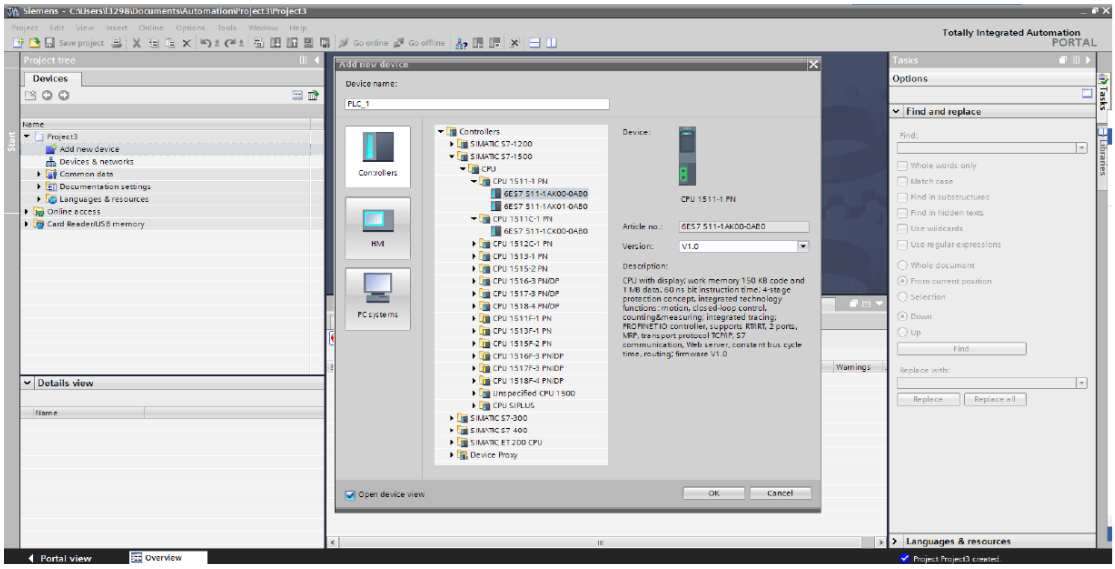

② Configure a slave. The following figure shows the master after a slave is added. Add the slave MD810PN on the right.

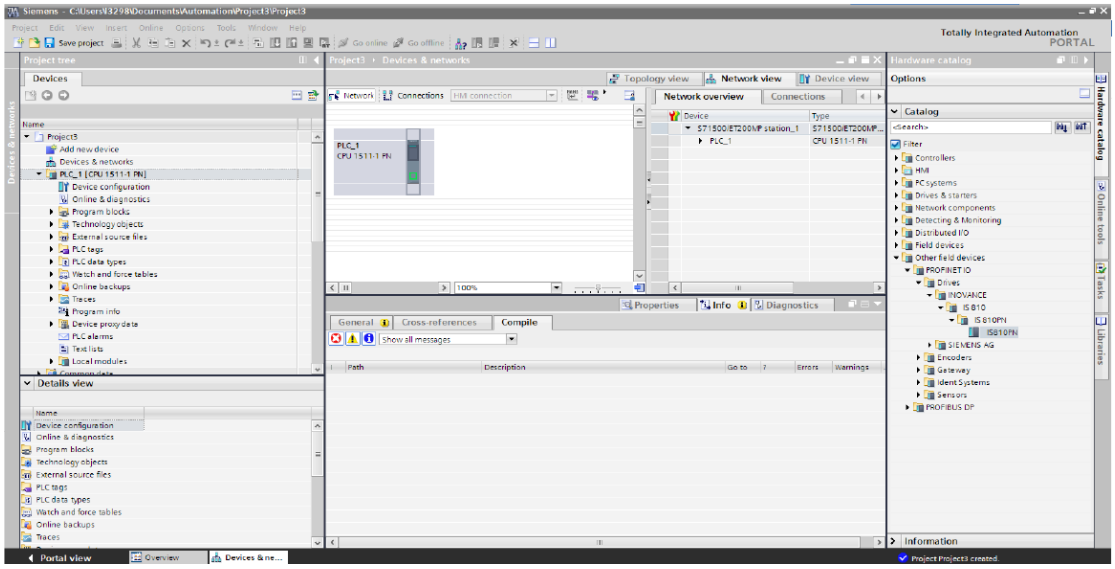

③ Configure the slave, as shown in the following figure.

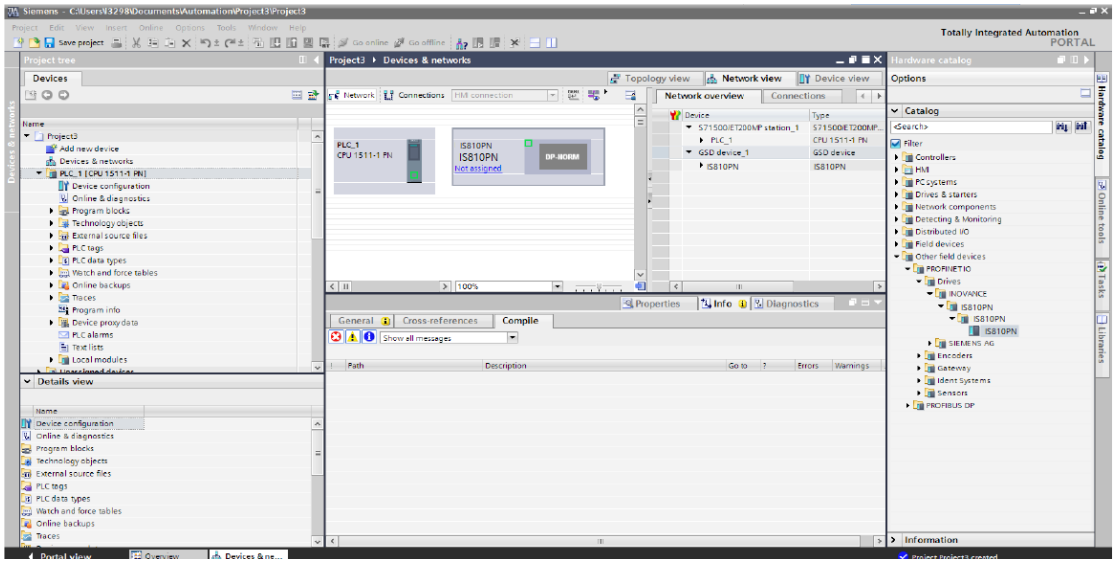

4) Network configuration

① Add a subnet to the master.

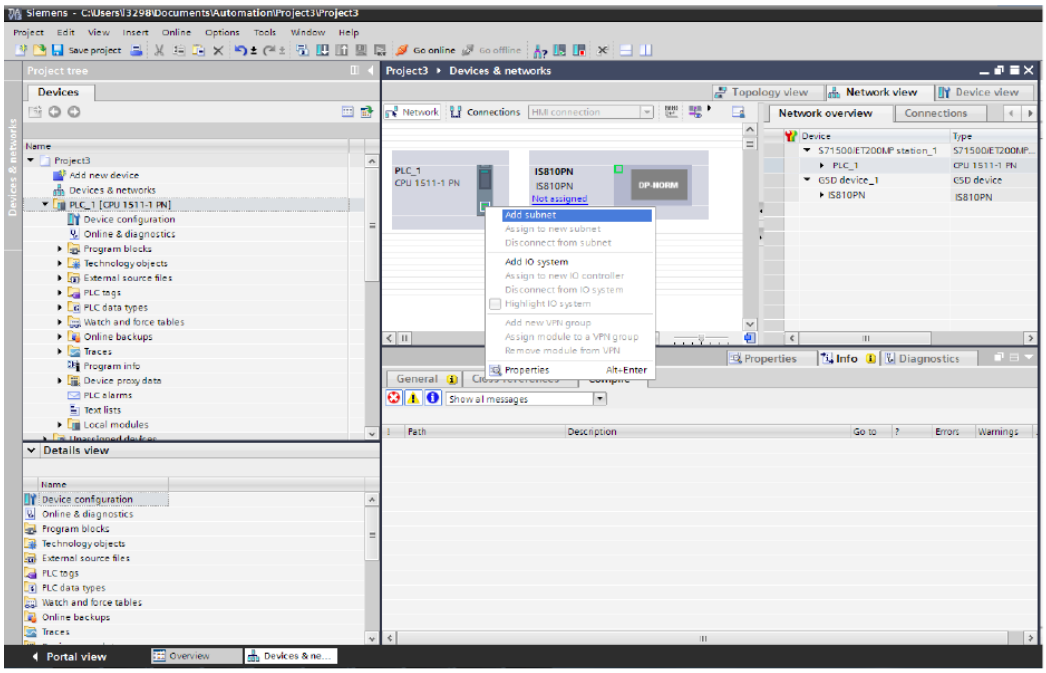

② Allocate the slave to the subnet.

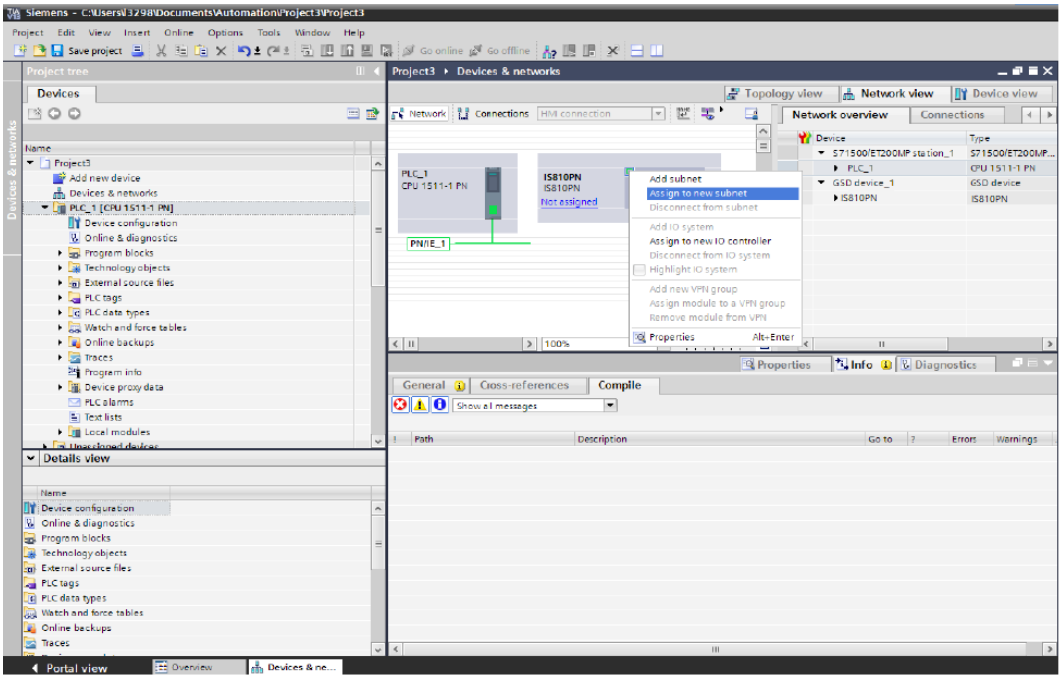

③ Select the subnet.

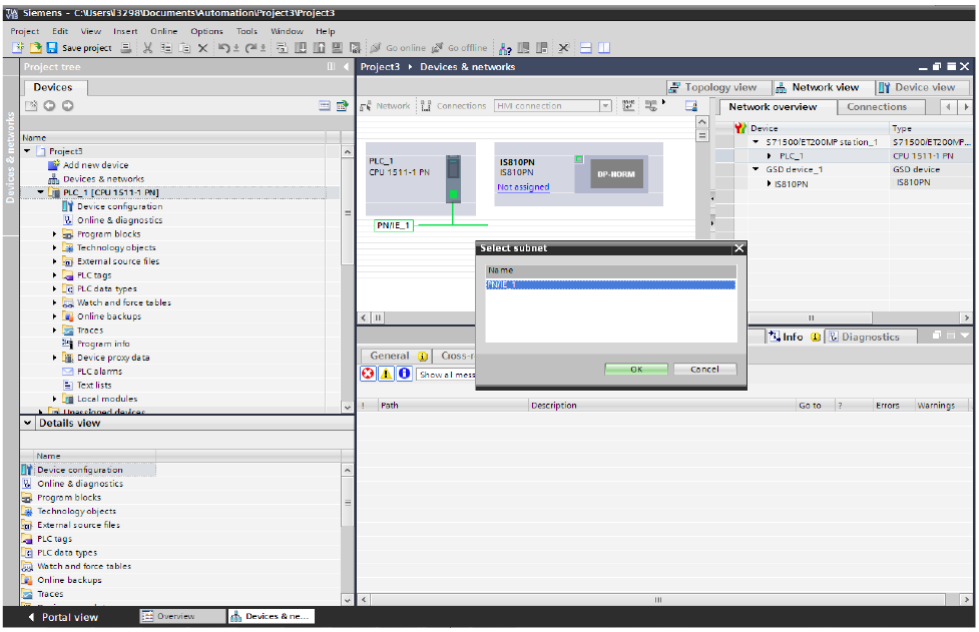

④ The following figure shows the added network. Click **PN/IE_1**, select **Assign device name**, and allocate a name to the slave.

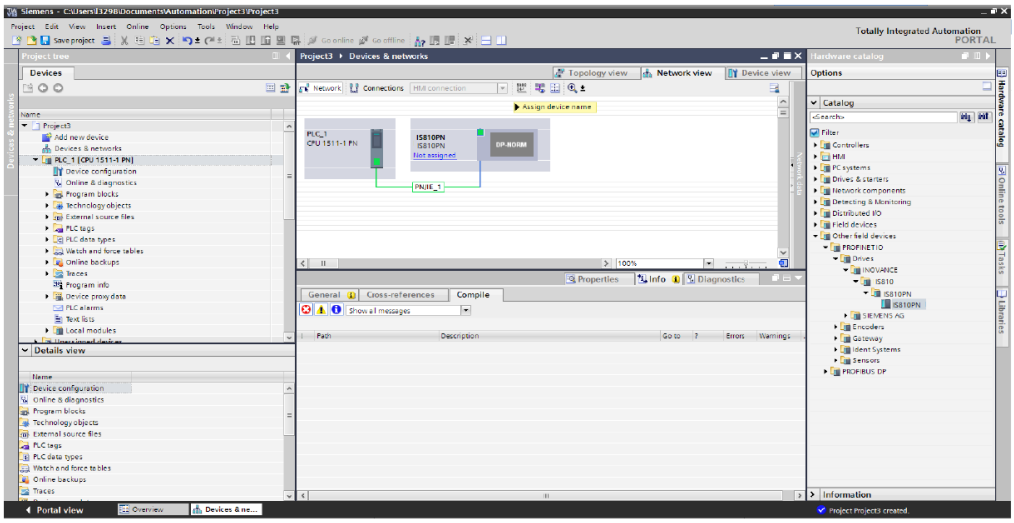

⑤ Connect the device correctly, allocate a device interface, and click **Update list**.

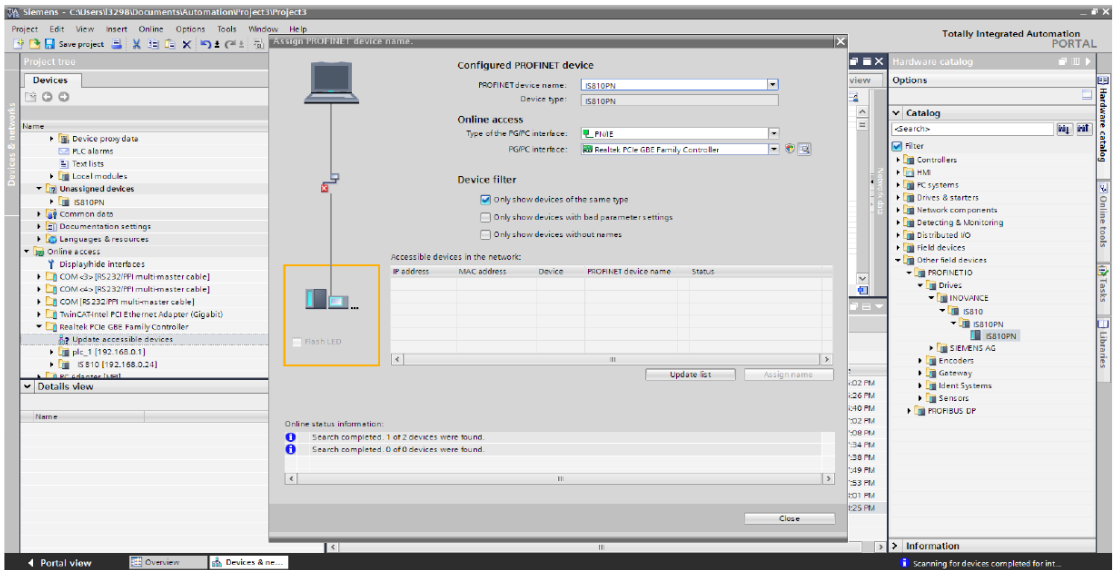

⑥ Allocate a name to the slave.

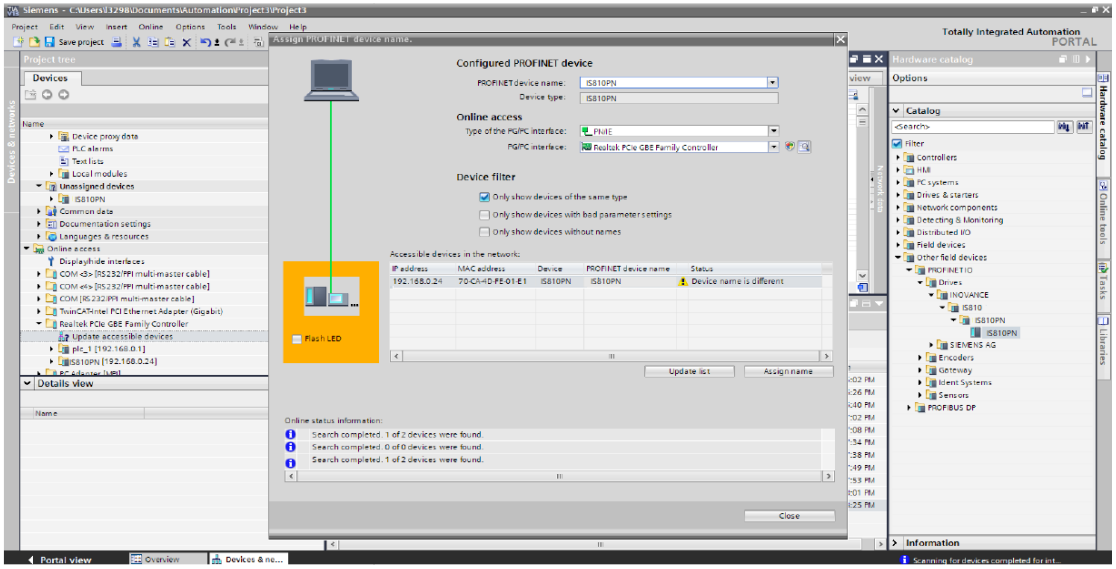

⑦ See the following figure.

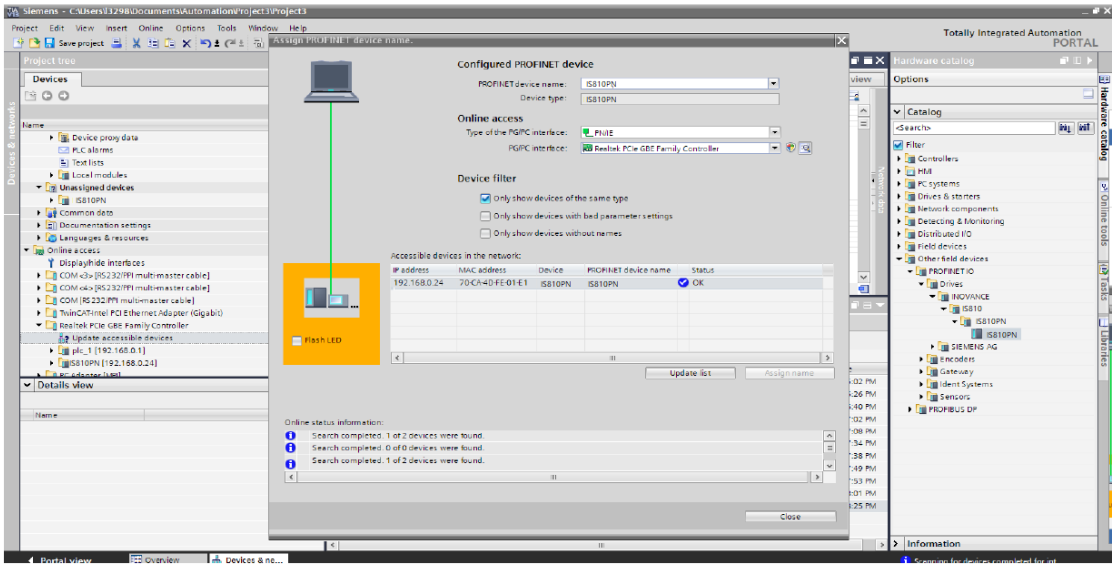

⑧ Select an interface.

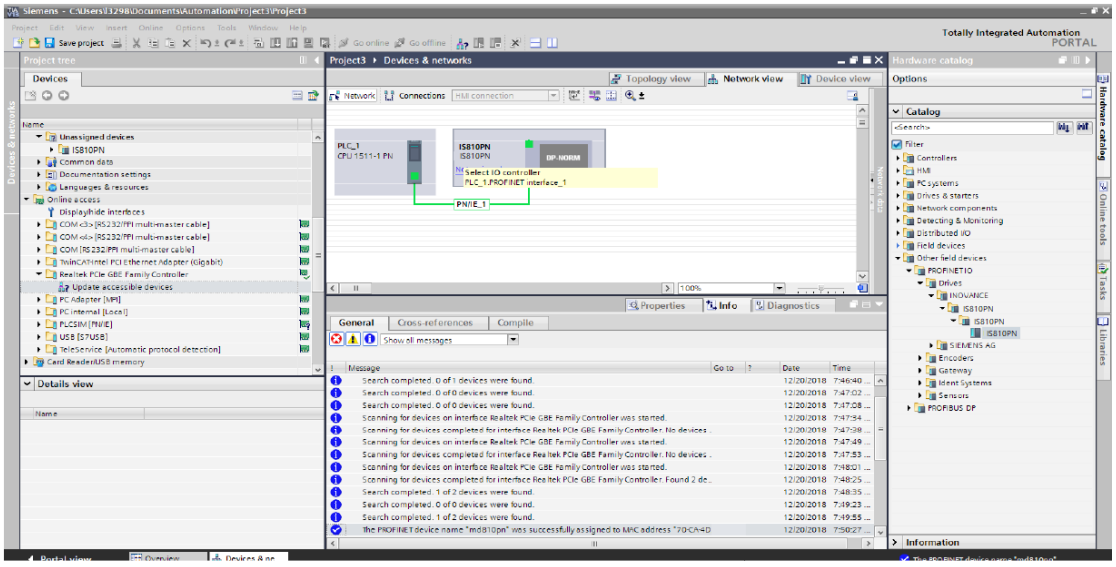

⑨ The following figure shows the correct connection.

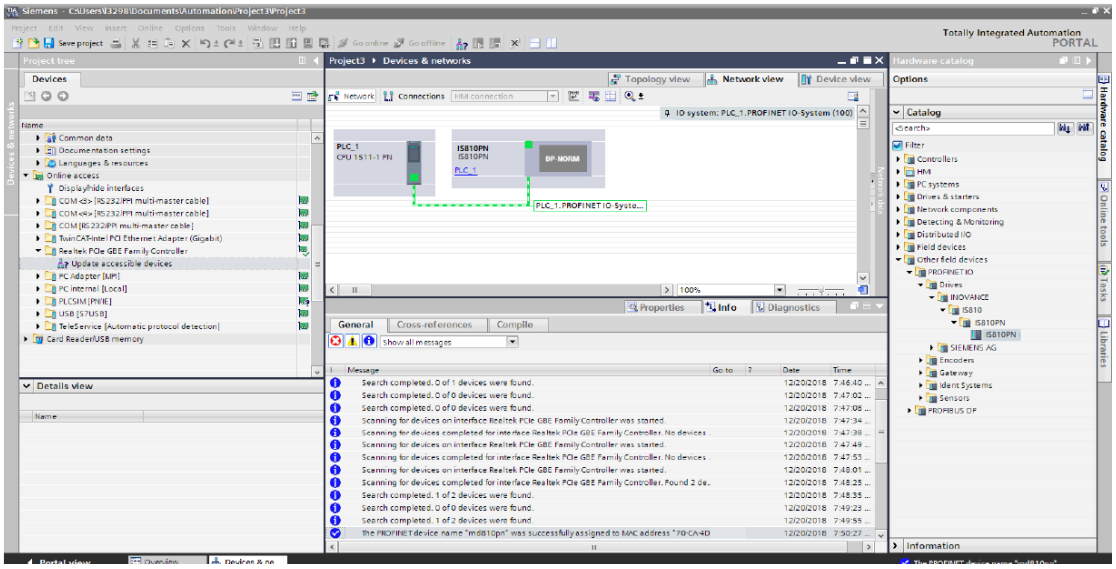

⑩ Switch to the online mode.

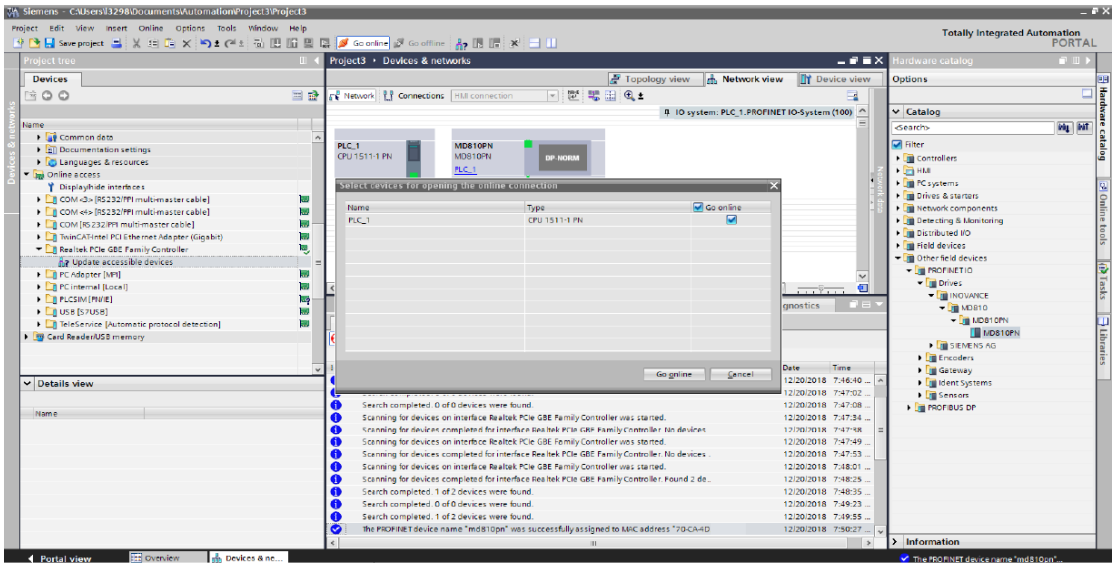

⑪ Select the device during initial connection.

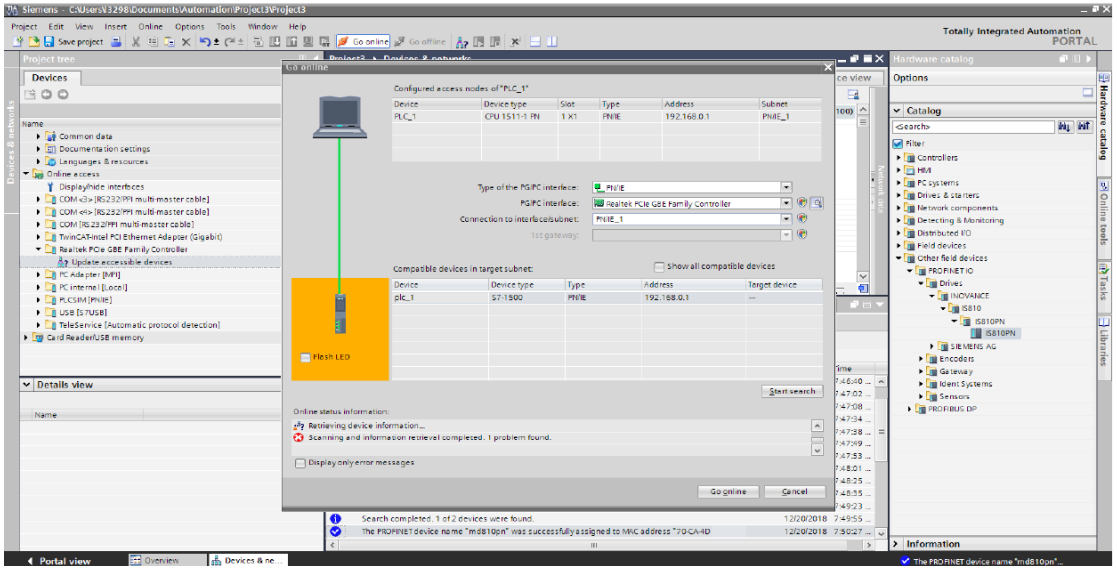

5) Hardware configuration

① Double-click the added MD810 device configuration to perform hardware configuration on the

MD810 power supply unit and the attached drive unit. Edit the configuration in the **Device overview** window.

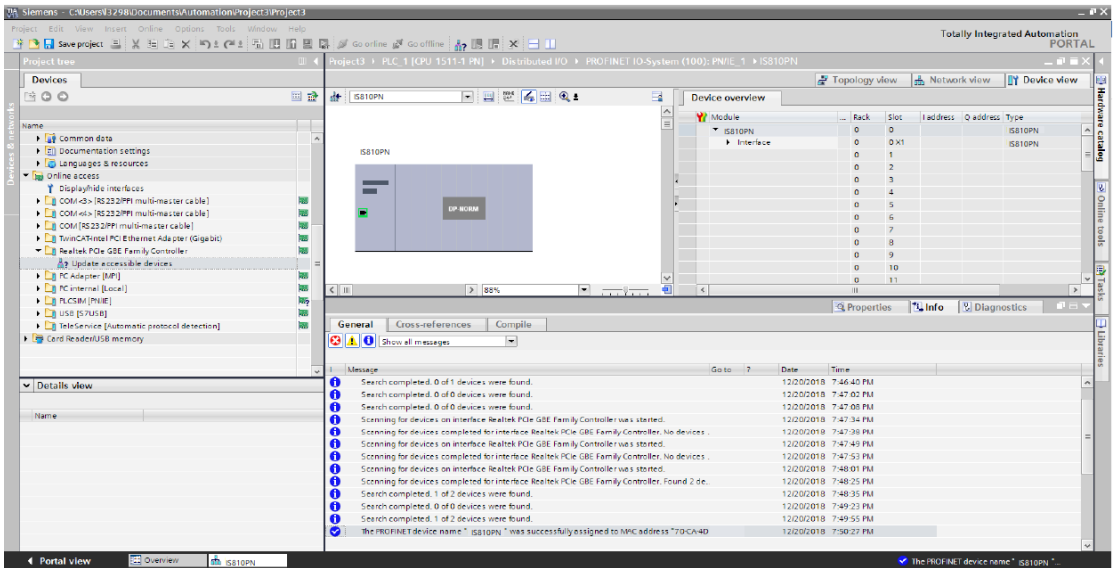

② Perform configuration based on the PDO settings of the MD810 power supply unit and the attached drive unit. You can only set the number of bytes on the PLC and ensure that the set number is consistent with the number of bytes occupied by the PDOs of the drive; otherwise, an alarm indicating hardware mismatch is generated and the drive generates the E16.75 alarm. For example, if the drive TPDO is configured with a 32-bit PDO and a 16-bit PDO, add 6-byte input to the PLC and add output of the same number of bytes to RPDO.

Brief description:

In the following figure, Device_1 is the power supply unit configured with a 2-byte input data.

Device_2 is the drive unit configured with a 12-byte input data and 18-byte output data.

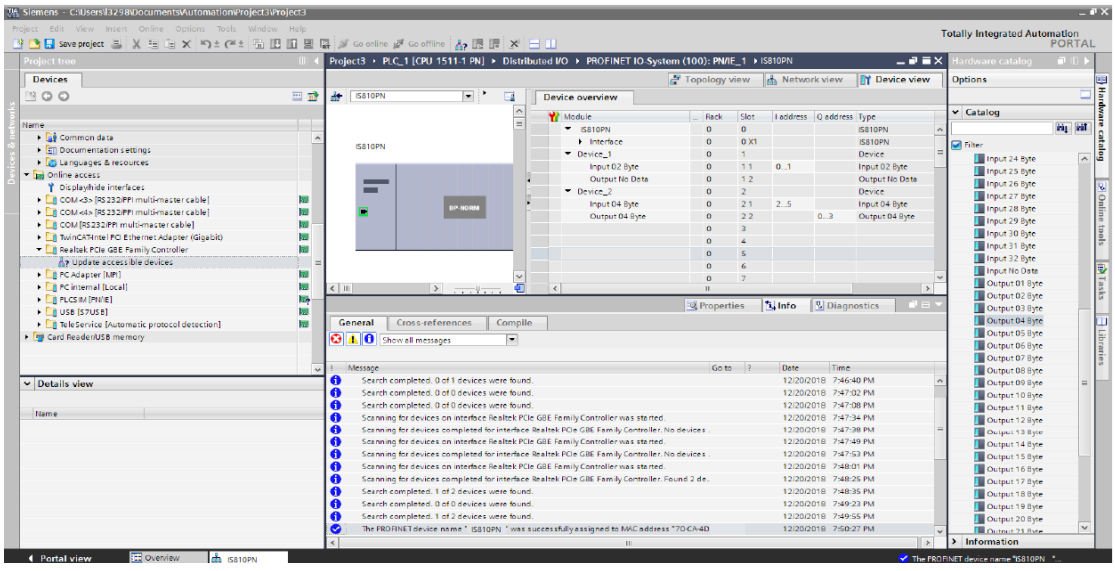

③ Download the configuration to the PLC. After the hardware configuration in step 2 is modified, download the configuration to the PLC again. If only the hardware configuration is modified, you can download only the hardware configuration.

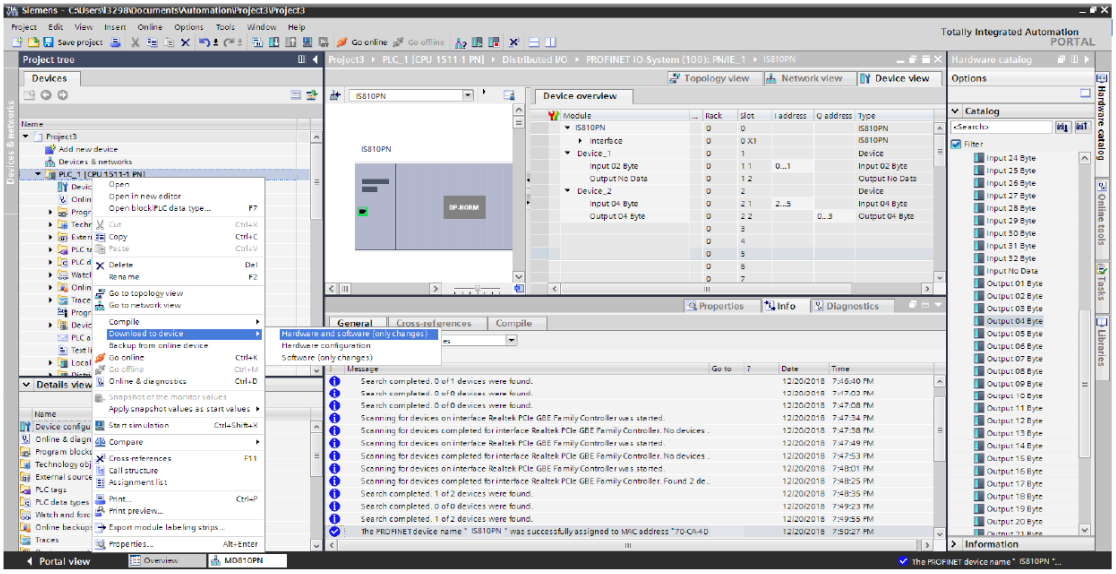

④ Download step 1: Click **Load** to download the configuration to the PLC. Then, the PLC stops running.

⑤ Download step 2: Click **Finish** after the download is complete. The PLC restarts.

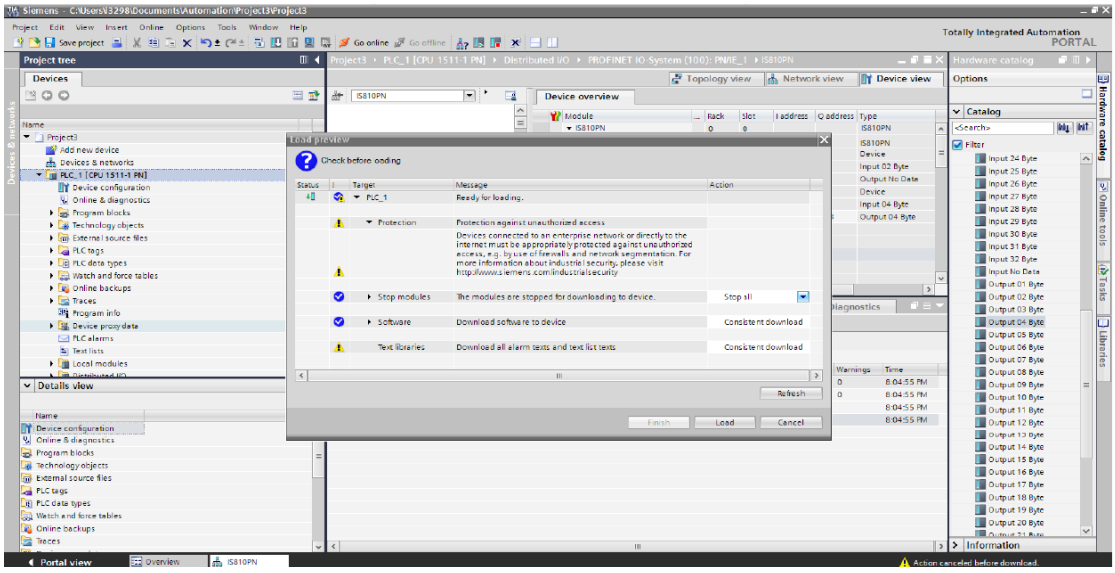

6) Adding the online monitoring list

① Add the monitoring list and add monitoring items based on the variables to be monitored.

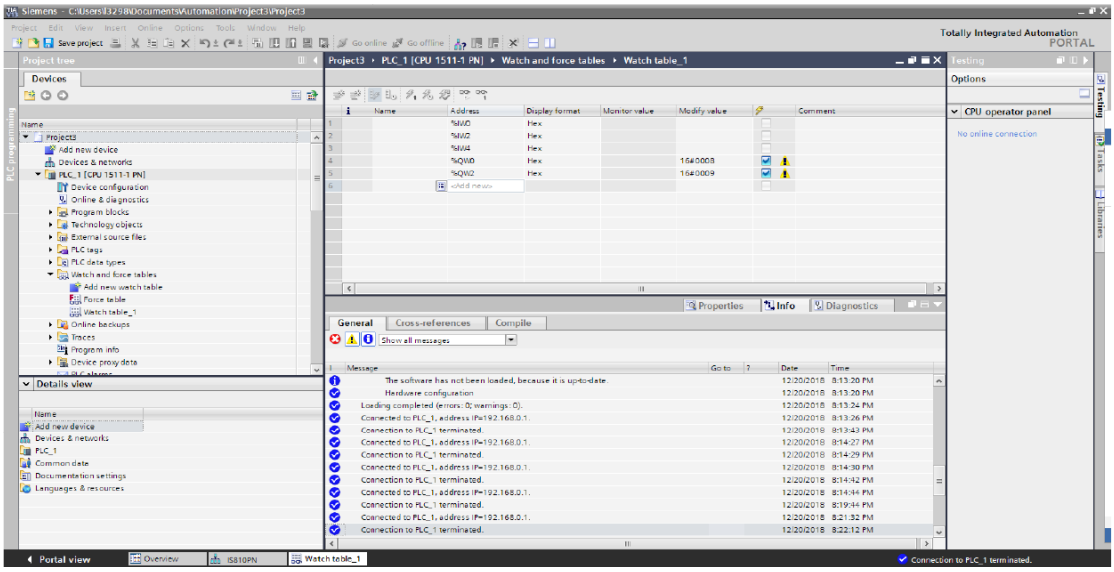

② Switch to the online mode.

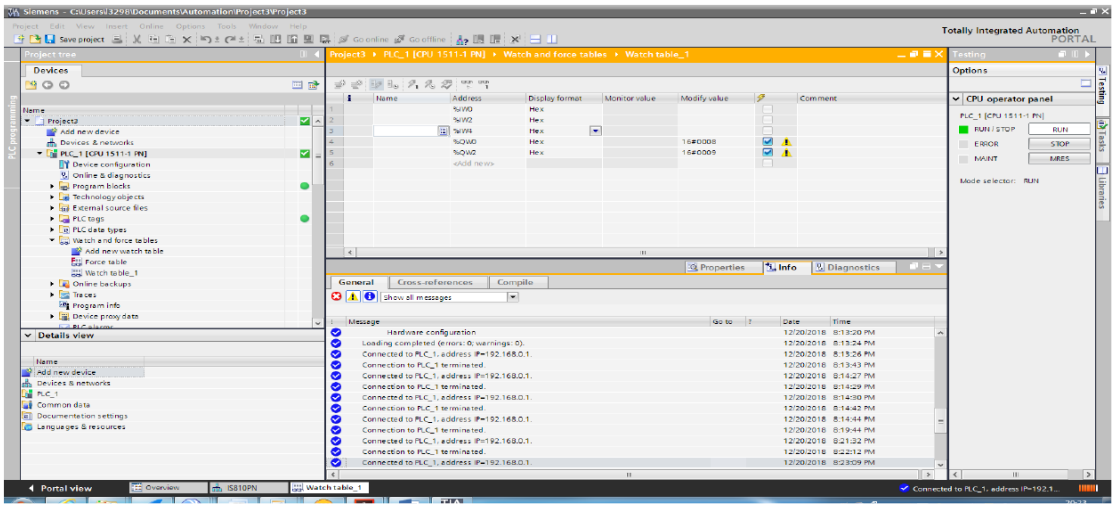

③ Click **Monitor all**.

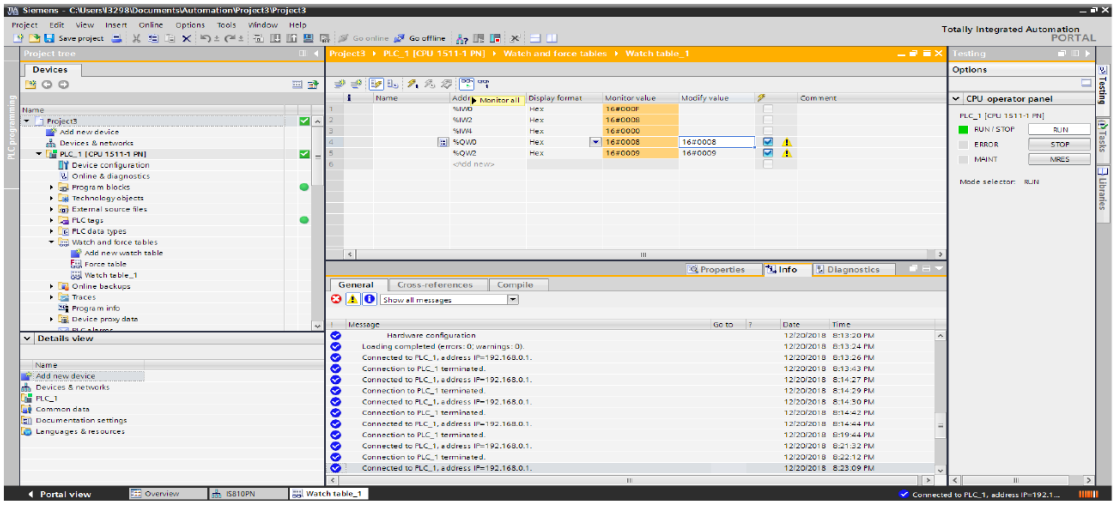

④ Modify values.

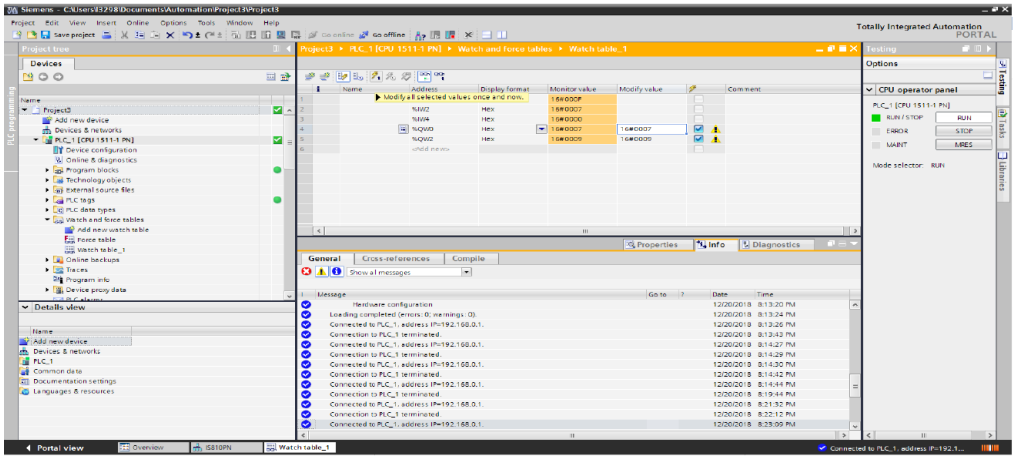

The configuration of the drive must be consistent with that of the PLC; otherwise, an alarm will be generated.

8.2 PROFIBUS-DP-to-CANopen Gateway of MD810 Power Supply Unit

8.2.1 Networking

8.2.2 Communication Performance

One gateway unit (PROFIBUS-DP slave) can be connected with up to 30 CANopen slaves. Note: The gateway unit is also a CANopen slave.

Data sent/received by one gateway unit (PROFIBUS-DP slave) with a PLC contains up to 122 parameters.

Data sent/received by every CANopen salve contains up to 8 parameters.

8.2.3 Application Instructions

1 Configuring parameters of the power supply unit and drive unit

1) Set the power supply unit

① Set Fd-10 (Communication protocol selection) to 3 (PROFIBUS-DP bridge).

② Set Fd-20 (DP communication address) to the number of the PROFIBUS-DP slave, which must be consistent with that in the PLC slave system.

③ Set parameters AF-00 to AF-63 to configure interaction data between the bridge unit and the PLC. The default is empty. The default parameter can be used directly.

2) Set the drive unit

① The station No. of each slave must start with 2 and be sequentially set without being repeated. If there are any needless power supply unit or drive unit in the network and networking control is not required, this parameter does not need to be set. That is, the default value 1 is used.

② Configure interaction data between every slave of the bridge and the PLC. The drive unit can use the default parameters directly.

③ Note: When IS810CO serves as the drive unit, H0C-45 (Communication protocol selection) must be set to 1 to enable the CANopen gateway for IS810CO. Otherwise, double-word parameters

cannot be read, and only single-word parameters can be written.

2 Configuring PROFIBUS-DP master S7-300

Before using the PROFIBUS-DP master, you need to configure the GSD file of the slave to add the corresponding slave device to the system of the master. If the file exists, skip step 2. You can obtain the GSD file from Inovance or our agent. The configuration procedure is as follows:

1) Create a project in step 7, add an S7-300 master in the project, as shown in the following figure.

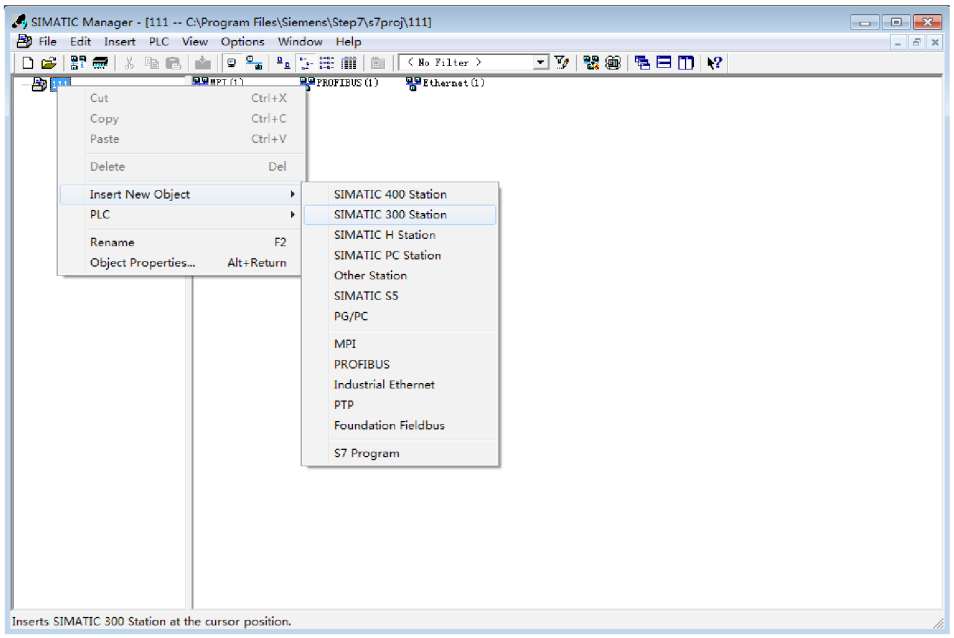

2) Double-click the hardware icon to access the **HW Config** interface, and choose **Options** > **Install GSD File** to add the **MD810DP.GSD** file (English path required), as shown in the following figure.

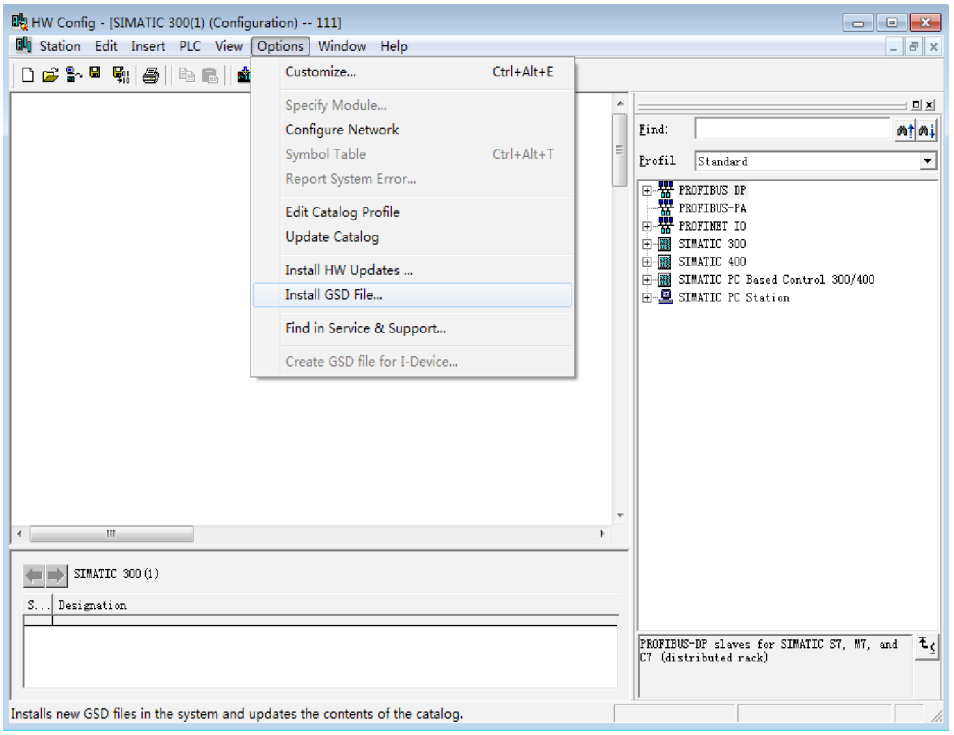

3) Click **Install**. After the file is installed, the MD810-gateway module is displayed under **Gateway**, as shown in the following figure.

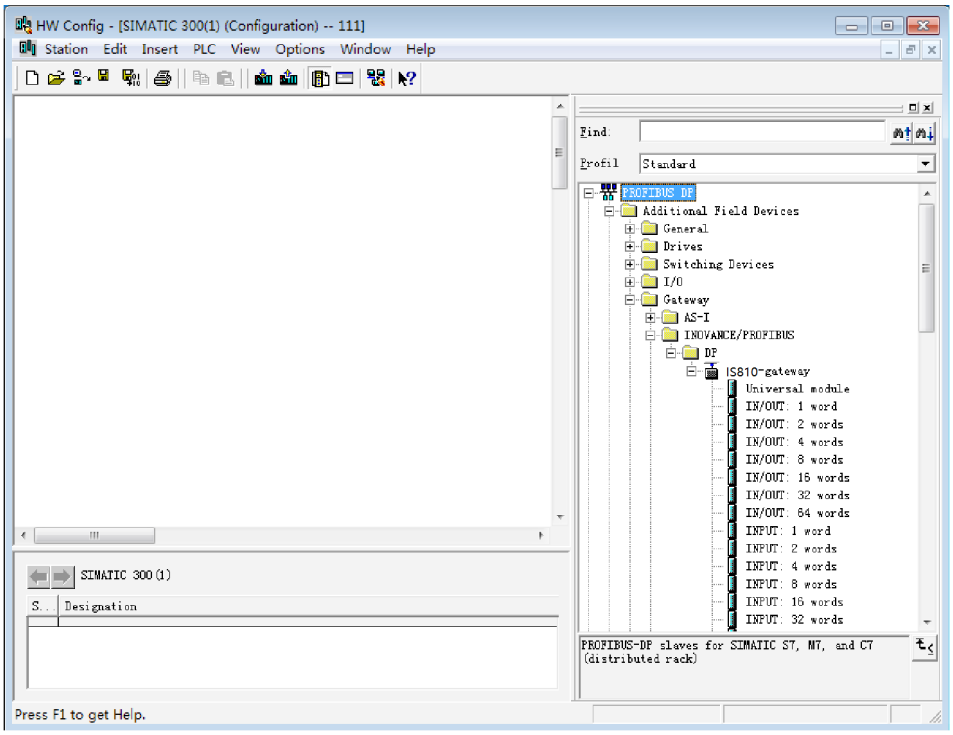

4) Create a slave system, as shown in the following figure.

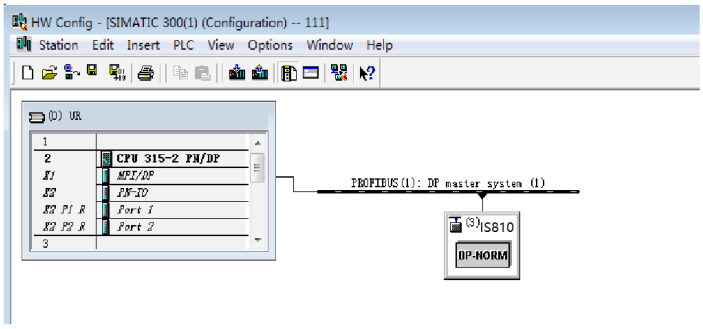

5) Configure parameters of the PROFIBUS-DP slave. Double-click the MD810 slave, as shown in the following figure.

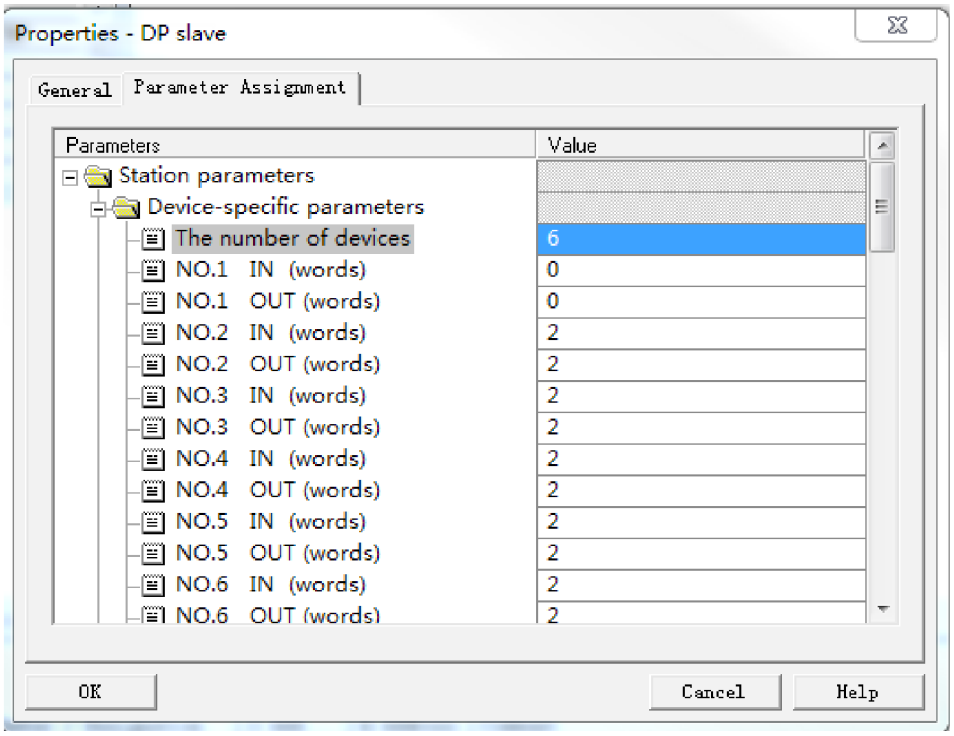

- **The number of devices**: The number of stations in the network, up to 30, including the bridge itself. Assume that one power supply unit (bridge) plus five drive units use this function. This value is equal to 6.
- **NO.1**, **NO.2**, **NO.3**...: NO.1 is the bridge. NO.2 is a slave with No.2 address when Fd-13 is set to 2. NO.3 is a slave with No.3 address when Fd-13 is set to 3. NO.N can be done in the same manner.
- **IN**, **OUT**: The amount of communication data between the power supply unit and the PLC, in unit of bytes. IN means data from the drive to the PLC and OUT means data from the PLC to the drive. The communication data between the power supply unit and the PLC is configured in group AF. Therefore, this value corresponds to the number of INs and OUTs configured in group AF. According to the preceding information, when NO.2 IN is 2, the number of data sent from the power supply unit of the CAN address 2 to the PLC is 2. The IN and OUT values are configured by parameters AF-32 to AF-35 (two parameters in group AF maps one data). OUT 2 has the similar meaning.
- For specific IN and OUT values, see the parameters of every station. OUT and IN correspond to AF-66 and AF-67, respectively.
- Values of AF-66 and AF-67 are equal to the sum of bits. For example, when AF-66 is set to 0012, OUT is 3 (1 + 2 = 3).

6) Configure INPUT and OUTPUT data length:

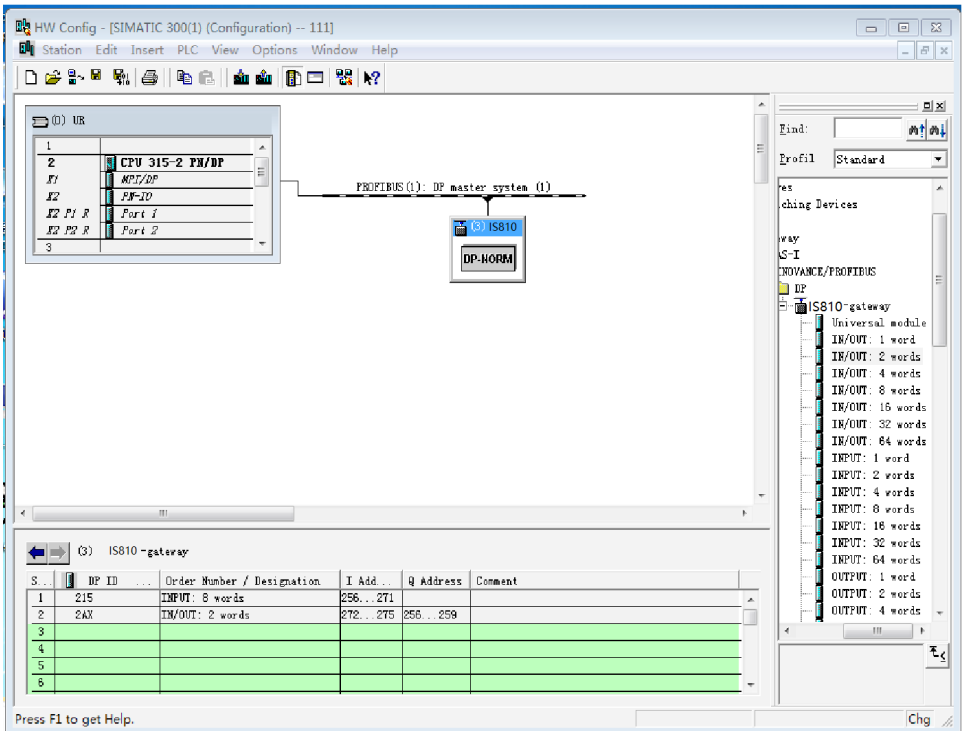

IN/OUT, **INPUT**, and **OUTPUT** on the right indicate this unit contains how many words of IN data and OUT data.

- **IN/OUT 1 word**, **IN/OUT 2 words**...: It indicates the combination of INs and OUTs. 1 word indicates one IN and one OUT. 2 words indicate two INs and two OUTs. n words can be done in the same manner.
- **INPUT 1 word**, **INPUT 2 words**...: It indicates independent INs. 1 word indicates one IN. 2 words indicate two INs. n words can be done in the same manner.
- **OUTPUT 1 word**, **OUTPUT 2 words**...: The same as above.

The slot IN and OUT quantity is equal to the sum of INs and OUTs of valid stations in the special device parameter in step 4. If "**The number of devices**" is 6, the sum of INs equals to NO.1 IN + NO.2 IN + ... NO6. IN. The sum of OUTs equals to NO.1 OUT + NO.2 OUT + ... NO6.OUT. The value shown in the preceding figure is for reference, that is, the sum of INs is 10 and the sum of OUTs is 10. Select available units on the right to insert 10 INs and 10 OUTs in the corresponding slots. The units can be used independently, in combination, or in the independent and combination mode, as long as the sum of INs and OUTs is equal to the sum of INs and OUTs of the valid stations configured in step 4. The following figure shows multiple modes, but in each mode, all the INs have 10 words and all the OUTs have 10 words.

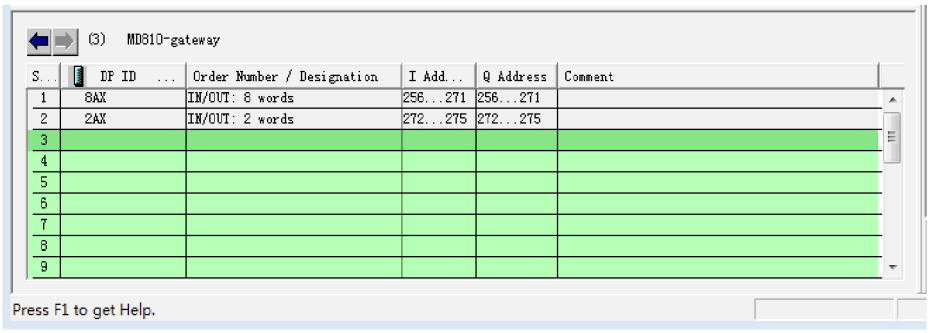

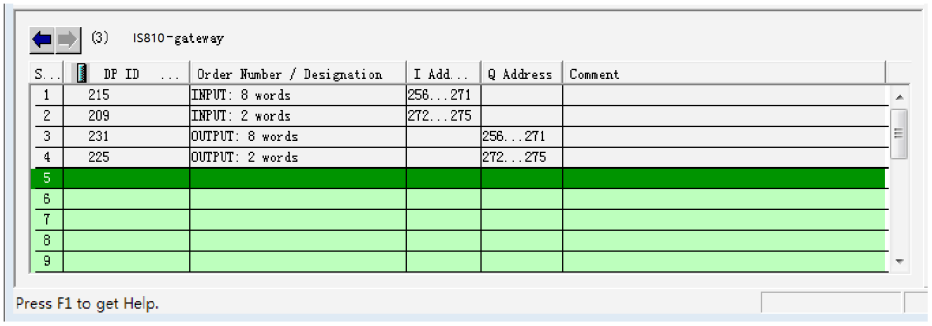

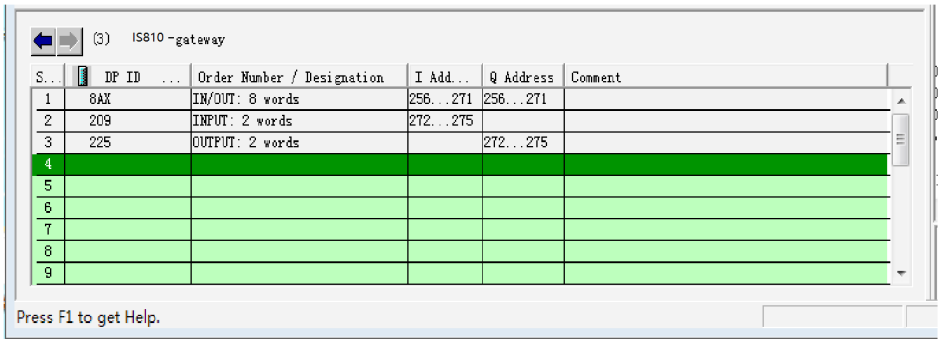

7) Obtain the process data relation between the PLC I/Q address and the power supply unit.

3 Configuring the CANopen Slave IS810CO

■ Process data mapping

Every CANopen slave supports sending and receiving up to 16-byte process data, that is, sending and receiving eight parameters, respectively. Any mapping is allowed. Both the sum of sent process data and received process data cannot exceed 244 bytes.

OUT: PLC > power supply unit. IN: Power supply unit > PLC

■ Modification through keypad

You can select the received/sent parameters by modifying parameters in group AF of the power supply unit. Take the following table as an example. The method of configuring F0-01 in OUT is as follows:

① Enter the parameter group No. of received/sent parameters plus 0x2000 in the first parameter in group AF of corresponding INPUT or OUTPUT. For example, F0 corresponds to 0x20F0. Enter it in AF-00.

② Plus the group No. of received/sent parameters by 1, convert the result into a hexadecimal number and enter the high bits of the second parameter in group AF of corresponding INPUT or OUTPUT. Convert the parameter data length into a hexadecimal number and enter the low bits of the second parameter in group AF of corresponding INPUT or OUTPUT. For example, if the parameter data length of F0-01 is 16 bits, enter 0x0210.

Target Parameter	Address of Parameter in Group AF	Value	Remarks

F0-01	AF-00	0x20F0	Parameter address index Equal to group No. F0 + 0x2000
	AF-01	0x0210	High bits (02): Parameter group No. offset + 1 Low bits (10): 16-bit parameter length For example, this value is 20 for a 32-bit parameter. Note: The offset values must be converted into hexadecimal.

You can also map the CANopen object dictionary to group AF. Except that object dictionary sub-index must be set without adding 1, other steps are similar, as shown in the following table.

Target Parameter	Address of Parameter in Group AF	Value	Remarks
0x2073-12	AF-00	0x2073	Object dictionary index
	AF-01	0x1210	High bits (12): Object dictionary sub-index Low bits (10): 16-bit object length

■ Mapping relation between PLC I/Q addresses and process data

The PLC I address corresponds to the slave INPUT, indicating power supply unit > PLC. The PLC 1 address corresponds to the slave OUTPUT, indicating PLC > power supply unit. The PLC I/Q addresses are sorted according to the station No. with data and the increasing sequence of the IN/OUT No. of corresponding stations. The minimum PLC I address is 256, corresponding to IN1 of station 2 and then 258 corresponding to IN2, as shown in the following figure. Because station 2 has only two INs, the next PLC I address corresponds to IN1 of station 2 and so on.

Station No.	Parameter	Value						PLC Q Address							PLC I Address
	The number of devices	30													
1	NO.1 IN (words)	2	OUT	OUT 1	U3-16	AF-00 : 0x2073	AF-01 : 0x1110	256	IN	IN 1	U0-04	AF-32 : 0x2070	AF-33 : 0x0510	256
				OUT 2	U3-17	AF-02 : 0x2073	AF-03 : 0x1210	258		IN 2	U0-05	AF-34 : 0x2070	AF-35 : 0x0810	258
				OUT 3						IN 3				
				OUT 4						IN 4				
	NO.1 OUT (words)	2		OUT 5						IN 5				
				OUT 6						IN 6				
				OUT 7						IN 7				
				OUT 8						IN 8				
2	NO.2 IN (words)	0	OUT	OUT 1					IN	IN 1				
				OUT 2						IN 2				
				OUT 3						IN 3				
				OUT 4						IN 4				
	NO.2 OUT (words)	0		OUT 5						IN 5				
				OUT 6						IN 6				
				OUT 7						IN 7				
				OUT 8						IN 8				
3	NO.3 IN (words)	0	OUT	OUT 1					IN	IN 1				
				OUT 2						IN 2				
				OUT 3						IN 3				
				OUT 4						IN 4				
	NO.3 OUT (words)	0		OUT 5						IN 5				
				OUT 6						IN 6				
				OUT 7						IN 7				
				OUT 8						IN 8				

■ Relation between parameters in group AF and INPUT/OUTPUT

OUT	Address of Parameter in Group AF		Default Parameters of Drive Unit		INPUT	Address of Parameter in Group AF		Default Parameters of Drive Unit	
OUTPUT	OUT1	AF-00	0x2073	0x7311 (Control word)	INPUT	IN1	AF-32	0x2070	0x7044 (Status word)
		AF-01	0x1210				AF-33	0x4510	
	OUT2	AF-02	0x2073	0x7310 (Frequency reference)		IN2	AF-34	0x2070	0x7045 (Running frequency)
		AF-03	0x1110				AF-35	0x4610	
	OUT3	AF-04				IN3	AF-36		
		AF-05					AF-37		
	OUT4	AF-06				IN4	AF-38		
		AF-07					AF-39		
	OUT5	AF-08				IN5	AF-40		
		AF-09					AF-41		
	OUT6	AF-10				IN6	AF-42		
		AF-11					AF-43		
	OUT7	AF-12				IN7	AF-44		
		AF-13					AF-45		
	OUT8	AF-14				IN8	AF-46		
		AF-15					AF-47		

Chapter 9 List of Parameters

9.1 Parameters of Power Supply Unit

For details about parameters of the power supply unit, see MD810 Series Standard Drive (Multidrive System) Advanced User Guide (data code: 19010478).

9.2 Parameters of Drive Unit

Group	Parameter Group Overview
H00	Servo motor parameters
H01	Servo drive parameters
H02	Basic control parameters
H03	Terminal input parameters
H04	Terminal output parameters
H05	Position control parameters
H06	Speed control parameters
H07	Torque control parameters
H08	Gain parameters
H09	Self-adjustment parameters
H0A	Fault and protection parameters
H0B	Monitoring parameters
H0C	Communication parameters
H0D	Auxiliary function parameters
H0F	Fully closed-loop parameters
H11	Multi-position parameters
H12	Multi-speed parameters
H17	VDI/VDO parameters
H30	Servo-related variables read through communication
H31	Servo-related variables set through communication

9.2.1 Group H00: Servo Motor Parameters

H00-00	Name	Motor SN			Setting Condition	At stop	Related Mode	PST
	Value Range	14000, 14101	Unit	1	Effective Time	Next power-on	Default	14000

Sets the SN of the servo motor.

For the IS810P series servo drive, the 20-bit (1048576 P/r) serial encoder motor is matched. In this case, H00-00 is set to 14000. For the SN of the serial encoder motor, view H00-05.

Value	Motor SN	Description
14000	Inovance motor with 20-bit incremental encoder	The IS810P series servo drive supports only the serial encoder motor and H00-00 is set to 14000.
14101	Inovance motor with 23-bit absolute encoder	

If the motor SN is set incorrectly, Er.120 (Product model matching fault) will occur.

H00-02	Name	Customized No.			Setting Condition	At display	Related Mode	-
	Value Range	-	Unit	-	Effective Time	-	Default	-

Displays the customized software No. in hexadecimal.

The display format is 6XX.YY.

XX indicates the customized software version.

YY indicates the customized software version update record.

H00-04	Name	Encoder version			Setting Condition	At display	Related Mode	-
	Value Range	-	Unit	-	Effective Time	-	Default	-

Displays the encoder software version.

The display format is 20XX.Y, with one decimal place.

20 indicates that the encoder resolution is 20-bit (1048576 P/r).

H00-05	Name	Serial encoder motor SN			Setting Condition	At display	Related Mode	-
	Value Range	-	Unit	-	Effective Time	-	Default	-

Displays the code of the serial-type motor, which is determined by the motor model.

H00-08	Name	Absolute encoder type			Setting Condition	At stop	Related Mode	-
	Value Range	0 to 65535	Unit	-	Effective Time	Next power-on	Default	-

When a 23-bit absolute encoder motor is used, if this parameter is set to 14100, it means a multi-turn absolute encoder. Other values indicate a single-turn absolute encoder.

H00-09	Name	Rated voltage			Setting Condition	At stop	Related Mode	-
	Value Range	0 to 220 1 to 380	Unit	V	Effective Time	Next power-on	Default	-

H00-10	Name	Rated power			Setting Condition	At stop	Related Mode	-
	Value Range	0.01 to 655.35	Unit	kW	Effective Time	Next power-on	Default	-

H00-11	Name	Rated current			Setting Condition	At stop	Related Mode	-
	Value Range	0.01 to 655.35	Unit	A	Effective Time	Next power-on	Default	-

H00-12	Name	Rated torque			Setting Condition	At stop	Related Mode	-
	Value Range	0.01 to 655.35	Unit	N·m	Effective Time	Next power-on	Default	-

H00-13	Name	Max. torque			Setting Condition	At stop	Related Mode	-
	Value Range	0.10 to 655.35	Unit	N·m	Effective Time	Next power-on	Default	-

H00-14	Name	Rated speed			Setting Condition	At stop	Related Mode	-
	Value Range	100 to 6000	Unit	RPM	Effective Time	Next power-on	Default	-

H00-15	Name	Max. speed			Setting Condition	At stop	Related Mode	-
	Value Range	100 to 6000	Unit	RPM	Effective Time	Next power-on	Default	-

H00-16	Name	Moment of inertia Jm			Setting Condition	At stop	Related Mode	-
	Value Range	0.01 to 655.35	Unit	$kgcm^2$	Effective Time	Next power-on	Default	-

H00-17	Name	Number of PMSM pole pairs			Setting Condition	At stop	Related Mode	-
	Value Range	2 to 360	Unit	Pole pair	Effective Time	Next power-on	Default	-

H00-18	Name	Stator resistance			Setting Condition	At stop	Related Mode	-
	Value Range	0.001 to 65.535	Unit	Ω	Effective Time	Next power-on	Default	-

H00-19	Name	Stator inductance Lq			Setting Condition	At stop	Related Mode	-
	Value Range	0.01 to 655.35	Unit	mH	Effective Time	Next power-on	Default	-

H00-20	Name	Stator inductance Ld			Setting Condition	At stop	Related Mode	-
	Value Range	0.01 to 655.35	Unit	mH	Effective Time	Next power-on	Default	-

H00-21	Name	Linear back EMF coefficient			Setting Condition	At stop	Related Mode	-
	Value Range	0.01 to 655.35	Unit	mV/RPM	Effective Time	Next power-on	Default	-

H00-22	Name	Torque coefficient Kt			Setting Condition	At stop	Related Mode	-
	Value Range	0.01 to 655.35	Unit	N·m/Arms	Effective Time	Next power-on	Default	-

H00-23	Name	Electrical constant Te			Setting Condition	At stop	Related Mode	-
	Value Range	0.01 to 655.35	Unit	ms	Effective Time	Next power-on	Default	-

H00-24	Name	Mechanical constant Tm			Setting Condition	At stop	Related Mode	-
	Value Range	0.01 to 655.35	Unit	ms	Effective Time	Next power-on	Default	-

H00-28	Name	Absolute encoder position offset			Setting Condition	At stop	Related Mode	-
	Value Range	0 to 1073741824	Unit	P/r	Effective Time	Next power-on	Default	-

H00-30	Name	Encoder selection (Hex)			Setting Condition	At stop	Related Mode	-
	Value Range	0x000: Common incremental encoder 0x013: Inovance 20-bit or 23-bit serial encoder	Unit	1	Effective Time	Next power-on	Default	0x013

H00-31	Name	Encoder PPR			Setting Condition	At stop	Related Mode	-
	Value Range	1 to 1073741824	Unit	P/r	Effective Time	Next power-on	Default	1048576

H00-33	Name	Electrical angle corresponding to Z signal			Setting Condition	At stop	Related Mode	-
	Value Range	0.0 to 360	Unit	°	Effective Time	Next power-on	Default	180

H00-34	Name	Electrical angle of phase U rising edge			Setting Condition	At stop	Related Mode	-
	Value Range	0.0 to 360	Unit	°	Effective Time	Next power-on	Default	180

9.2.2 Group H01: Servo Drive Parameters

H01-00	Name	MCU software version			Setting Condition	At display	Related Mode	-
	Value Range	0 to 65535	Unit	-	Effective Time	-	Default	-

Displays the MCU software version.

The display format is XXXX.Y, with one decimal place.

H01-01	Name	FPGA software version			Setting Condition	At display	Related Mode	-
	Value Range	0 to 65535	Unit	-	Effective Time	-	Default	-

Displays the FPGA software version.

The display format is XXXX.Y, with one decimal place.

H01-02	Name	Servo drive SN			Setting Condition	At stop	Related Mode	-
	Value Range	0 to 65535	Unit	-	Effective Time	Next power-on	Default	-

Sets the SN of the servo drive.

Value	Servo Drive SN	Description
30004	T005	The rated drive power is 1.3 kW. The main circuit inputs three-phase 380 V.
30005	T009	The rated drive power is 1.8 kW. The main circuit inputs three-phase 380 V.
30006	T013	The rated drive power is 2.9 kW. The main circuit inputs three-phase 380 V.
30007	T017	The rated drive power is 4.4 kW. The main circuit inputs three-phase 380 V.
30008	T025	The rated drive power is 7.5 kW. The main circuit inputs three-phase 380 V.
30009	T032	The rated drive power is 15 kW. The main circuit inputs three-phase 380 V.
30010	T037	The rated drive power is 18.5 kW. The main circuit inputs three-phase 380 V.
30013	T075	The rated drive power is 37 kW. The main circuit inputs three-phase 380 V.
30016	T091	The rated drive power is 45 kW. The main circuit inputs three-phase 380 V.
	T112	The rated drive power is 55 kW. The main circuit inputs three-phase 380 V.
	T150	The rated drive power is 75 kW. The main circuit inputs three-phase 380 V.

If the servo drive SN is set incorrectly, Er.120 (Product model matching fault) will occur.

9.2.3 Group H02: Basic Control Parameters

H02-00	Name	Control mode			Setting Condition	At stop	Related Mode	-
	Value Range	0 to 8	Unit	-	Effective Time	Immediately	Default	1

Sets the control mode of the servo drive.

<table>
<tr><th>Value</th><th>Control Mode</th><th>Description</th></tr>
<tr><td>0</td><td>Speed mode</td><td>For parameter settings in the speed mode, see Section 5.3.</td></tr>
<tr><td>1</td><td>Position mode</td><td>For parameter settings in the position mode, see Section 5.2.</td></tr>
<tr><td>2</td><td>Torque mode</td><td>For parameter settings in the torque mode, see Section 5.4.</td></tr>
<tr><td>3</td><td>Torque mode ↔ Speed mode</td><td>Allocate a DI with the function FunIN.10: M1_SEL (Mode switchover) and determine the terminal logic.<table><tr><th>M1_SEL Terminal Logic</th><th>Control Mode</th></tr><tr><td>Inactive</td><td>Torque mode</td></tr><tr><td>Active</td><td>Speed mode</td></tr></table></td></tr>
<tr><td>4</td><td>Speed mode ↔ Position mode</td><td>Allocate a DI with the function FunIN.10: M1_SEL (Mode switchover) and determine the terminal logic.<table><tr><th>M1_SEL Terminal Logic</th><th>Control Mode</th></tr><tr><td>Inactive</td><td>Speed mode</td></tr><tr><td>Active</td><td>Position mode</td></tr></table></td></tr>
<tr><td>5</td><td>Torque mode ↔ Position mode</td><td>Allocate a DI with the function FunIN.10: M1_SEL (Mode switchover) and determine the terminal logic.<table><tr><th>M1_SEL Terminal Logic</th><th>Control Mode</th></tr><tr><td>Inactive</td><td>Torque mode</td></tr><tr><td>Active</td><td>Position mode</td></tr></table></td></tr>
<tr><td>6</td><td>Torque mode ↔ Speed mode ↔ Position mode</td><td>Allocate two DIs with the function FunIN.10: M1_SEL (Mode switchover) and FunIN.11: M2_SEL (Mode switchover) and determine the terminal logic.<table><tr><th>M2_SEL Terminal Logic</th><th>M1_SEL Terminal Logic</th><th>Control Mode</th></tr><tr><td>Inactive</td><td>Inactive</td><td>Torque mode</td></tr><tr><td>Active</td><td>Inactive</td><td>Speed mode</td></tr><tr><td>-</td><td>Active</td><td>Position mode</td></tr></table></td></tr>
<tr><td>8</td><td>CANopen control mode</td><td>It is applicable to -CO models only. For details, see “7.3.2 CANopen Communication Parameter Setting”.</td></tr>
</table>

When H02-00 is set to 3, 4, 5, or 6, see *“5.5 Hybrid Control Mode”* for parameter settings.

H02-01	Name	Absolute system selection			Setting Condition	At stop	Related Mode	PST
	Value Range	0 to 2	Unit	1	Effective Time	Next power-on	Default	0
Selects the absolute position function of the servo drive.								

H02-02	Name	Rotation direction selection			Setting Condition	At stop	Related Mode	PST
	Value Range	0 to 1	Unit	-	Effective Time	Next power-on	Default	0

Defines the forward direction of the motor when viewed from the motor shaft side.

Value	Rotation Direction	Description
0	CCW as the forward direction	When the forward reference is input, the motor rotates in the CCW direction viewed from the motor shaft side; that is, the motor rotates counterclockwise.
1	CW as the forward direction	When the forward reference is input, the motor rotates in the CW direction viewed from the motor shaft side; that is, the motor rotates clockwise.

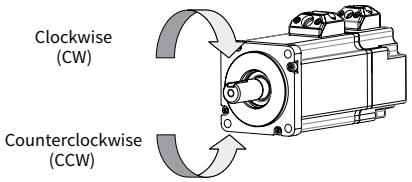

H02-03	Name	Output pulse phase			Setting Condition	At stop	Related Mode	PST
	Value Range	0 to 1	Unit	-	Effective Time	Next power-on	Default	0

Defines the relationship between phase A and phase B on the condition that the motor direction of rotation remains unchanged when pulse output is enabled.

Value	Output Pulse Phase	Remarks
0	Phase A leads phase B.	Phase A leads phase B by 90° in encoder frequency-division output pulses. 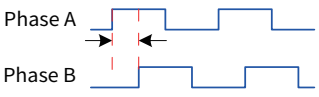
1	Phase A lags behind phase B.	Phase A lags behind phase B by 90° in encoder frequency-division output pulses. 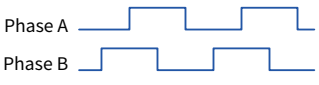

H02-05	Name	Stop mode at S-ON OFF			Setting Condition	At stop	Related Mode	PST
	Value Range	0 to 1	Unit	-	Effective Time	Immediately	Default	0

Defines the deceleration mode of the servo motor for stopping rotating upon S-ON OFF and the motor status after stop.

Value	Stop Mode
0	Coast to stop, keeping de-energized status
1	Stop at zero speed, keeping de-energized status

Set a proper stop mode according to the mechanical status and running requirements.

For comparison of stop modes, see *"5.1.8 Servo OFF"*.

H02-06	Name	Stop mode at No.2 fault			Setting Condition	At stop	Related Mode	PST
	Value Range	0 to 1	Unit	-	Effective Time	Immediately	Default	0

Defines the deceleration mode of the servo motor for stopping rotating and the servo motor status when a No.2 fault occurs.

Value	Stop Mode
0	Coast to stop, keeping de-energized status
1	Stop at zero speed, keeping de-energized status

For details about No.2 faults, see *"Chapter 11 Troubleshooting"*.

For comparison of stop modes, see *"5.1.8 Servo OFF"*.

Note:

If a No.2 fault occurs after the brake is applied, the servo drive executes the value "1" forcibly.

H02-07	Name	Stop mode at overtravel			Setting Condition	At stop	Related Mode	PST
	Value Range	0 to 2	Unit	-	Effective Time	Immediately	Default	1

Defines the deceleration mode of the servo motor for stopping rotating and the servo motor status when overtravel occurs.

Value	Stop Mode
0	Coast to stop, keeping de-energized status
1	Stop at zero speed, keeping position lock state
2	Stop at zero speed, keeping de-energized status

When the servo motor drives the vertical axis, to ensure safety, set H02-07 to 1 to make the motor shaft in the position lock state when overtravel occurs.

For comparison of stop modes, see *"5.1.8 Servo OFF"*.

H02-08	Name	Stop mode at No.1 fault			Setting Condition	At stop	Related Mode	PST
	Value Range	0	Unit	-	Effective Time	Immediately	Default	0

Defines the deceleration mode of the servo motor for stopping rotating and the servo motor status when a No.1 fault occurs.

Value	Stop Mode
0	Coast to stop, keeping de-energized status

For details about No.1 faults, see *"Chapter 11 Troubleshooting"*.

For comparison of stop modes, see *"5.1.8 Servo OFF"*.

H02-09	Name	Delay from brake output ON to command received			Setting Condition	During operation	Related Mode	PS
	Value Range	0 to 500	Unit	ms	Effective Time	Immediately	Default	250

Defines the delay from the moment the brake output signal is ON to the moment the servo drive starts to receive commands after power-on.

Within the time specified in H02-09, the servo drive does not receive position/speed/torque references.

See *"5.1.6 Brake Setting"* to view the brake sequence diagram at motor standstill.

H02-10	Name	Delay from brake output OFF to motor de-energized in static state			Setting Condition	During operation	Related Mode	PS
	Value Range	1 to 1000	Unit	ms	Effective Time	Immediate-ly	Default	150

Defines the delay from the moment brake output (BK) is OFF to the moment when the motor at standstill enters the de-energized status.

See *"5.1.6 Brake Setting"*to view the brake sequence diagram at motor standstill.

H02-11	Name	Motor speed threshold at brake output OFF in rotating state			Setting Condition	During operation	Related Mode	PS
	Value Range	0 to 3000	Unit	RPM	Effective Time	Immediate-ly	Default	30

Sets the motor speed threshold at brake output OFF when the motor is in rotating state.

See *"5.1.6 Brake Setting"* to view the brake sequence diagram at motor standstill.

H02-12	Name	Delay from S-ON OFF to brake output OFF in rotating state			Setting Condition	During operation	Related Mode	PS
	Value Range	1 to 1000	Unit	ms	Effective Time	Immediate-ly	Default	500

Sets the delay from S-ON OFF to brake output OFF when the motor is in rotating state.

See *"5.1.6 Brake Setting"* to view the brake sequence diagram at motor standstill.

H02-15	Name	Warning display on the keypad			Setting Condition	At stop	Related Mode	PST
	Value Range	0 to 1	Unit	-	Effective Time	Immediate-ly	Default	0

Defines whether to switch the panel to the fault display mode when a No.3 fault occurs.

Value	Stop Mode	Description
0	Output warning information immediately	The panel displays the warning code in real time once a No.3 warning occurs.
1	Not output warning information	The panel displays only No.1 faults and No.2 faults, and does not display No.3 warning. To check whether No.3 warning occurs for the recent 10 times, view H0B-33 and H0B-34.

For details about No.3 warning, see *"Chapter 8 CANopen Communication Cases"*.

H02-18	Name	S-ON filter time constant			Setting Condition	At stop	Related Mode	PST
	Value Range	0 to 64	Unit	ms	Effective Time	Immediate-ly	Default	0

Sets the filter time constant of the DI function 1 (FunIN.1: S-ON).

When FunIN.1: S-ON is allocated to a low-speed hardware DI terminal, the signal width must be larger than (H02-18) + 3 ms. Otherwise, the S-ON signal is inactive.

When FunIN.1: S-ON is allocated to a high-speed hardware DI terminal, the signal width must be larger than (H02-18) + 0.25 ms. Otherwise, the S-ON signal is inactive.

When FunIN.1: S-ON is allocated to a VDI terminal, the signal width must be larger than (H02-18) + 1 ms. Otherwise, the S-ON signal is inactive.

The DI S-ON signal displayed on the oscilloscope of software tool does not require filter set in H02-18.

H02-30	Name	User password			Setting Condition	At stop	Related Mode	PST
	Value Range	0 to 65535	Unit	-	Effective Time	Next pow-er-on	Default	0

Sets the use password. For details, see *"4.4 User Password"*.

H02-31	Name	System parameter initialization			Setting Condition	At stop	Related Mode	PST
	Value Range	0 to 2	Unit	-	Effective Time	Immediate-ly	Default	0

Used to restore default values or clear fault records.

Value	Operation	Description
0	No operation	-
1	Restore default set-tings	Restore parameter default settings except parameters in groups H00 and H01.
2	Clear fault records	Clear faults and warnings of the recent 10 times.

When necessary, use the Inovance software tool to back up parameters except parameters in groups H00 and H01.

H02-32	Name	Default keypad display			Setting Condition	During operation	Related Mode	-
	Value Range	0 to 99	Unit	-	Effective Time	Immediate-ly	Default	50

According to the setting, the keypad can automatically switch over to the monitoring parameter display mode (parameters in group H0B). H02-32 is used to set offset in H0B.

Value	Parameter in Group H0B	Description
0	H0B-00	When the motor speed is not zero, the keypad displays the setting of H0B-00 (Actual motor speed).
1	H0B-01	The keypad displays the setting of H0B-01 (Speed reference.)

If a non-existing parameter is set, the keypad does not switch over to H0B parameter display.

H02-33	Name	EtherCAT software version			Setting Condition	At display	Related Mode	-
	Value Range	-	Unit	-	Effective Time	-	Default	-

Displays the EtherCAT software version, with four decimal places.

H02-34	Name	CAN software version			Setting Condition	At display	Related Mode	-
	Value Range	-	Unit	-	Effective Time	-	Default	-

Displays the CANlink communication software version, with two decimal places.

H02-38	Name	Braking time at short circuit			Setting Condition	During operation	Related Mode	-
	Value Range	0 to 30000	Unit	-	Effective Time	Immediate-ly	Default	5000

Sets the duration of braking at short circuit.

H02-39	Name	Max. braking current at short circuit			Setting Condition	During operation	Related Mode	-
	Value Range	0 to 3000	Unit	0.1%	Effective Time	Immediate-ly	Default	1000

Sets the maximum braking current at short circuit.

9.2.4 Group H03: Terminal Input Parameters

H03-00	Name	DI function allocation 1 (activated upon power-on)			Setting Condition	During operation	Related Mode	-
	Value Range	0 to 0xFFFF	Unit	-	Effective Time	Next pow-er-on	Default	0

Used to enable a certain DI function (FunIN.1 to FunIN.16) to be activated immediately at next power-on.

The value of H03-00 is displayed as a hexadecimal on the keypad. When it is converted to a binary value, "bit(n) = 1" indicates the FunIN.(n+1) is active.

H03-00 is input and displayed in decimal on the software tool.

For details about FunIN.1 to FunIN.16, see *"10.22 DI/DO Functions"*.

The following table lists the setpoints of H03-00.

Value (Hex)	Effective Bit	DI Function to Become Active upon Power-on	Function
0000	None	0 (No function)	None
0001	bit0	1	S-ON (Servo ON)
0002	bit1	2	ALM-RST (Fault and warning reset)
0004	bit2	3	GAIN-SEL (Gain switchover)
0008	bit3	4	CMD-SEL (Main/Auxiliary reference switchover)
0010	bit4	5	DIR-SEL (Multi-speed reference direction switchover by DI)
0020	bit5	6	CMD1 (Multi-reference switchover 1)
0040	bit6	7	CMD2 (Multi-reference switchover 2)
0080	bit7	8	CMD3 (Multi-reference switchover 3)
0100	bit8	9	CMD4 (Multi-reference switchover 4)
0200	bit9	10	M1-SEL (Mode switchover 1)
0400	bit10	11	M2-SEL (Mode switchover 2)
0800	bit11	12	ZCLAMP (Zero clamp enable)
1000	bit12	13	INHIBIT (Position reference inhibited)
2000	bit13	14	P-OT (Positive limit switch)
4000	bit14	15	N-OT (Negative limit switch)
8000	bit15	16	P-CL (Forward external torque limit)

Set H03-00 to a value listed in the preceding table.

The setting of H03-00 cannot be duplicated with the DI function allocation in group H03 and VDI function allocation in group H17. Otherwise, the setting of H03-00 is invalid. Whether a DI function is active is determined by logic of the DI terminal that is set for this function in group H03 or H17.

Do not set the DI terminal (edge valid) for the DI function (activated upon power-on), such as ALM-RST (Fault and warning reset).

Do not set the DI terminal that is switched over between active and inactive for the DI function (activated upon power-on).

H03-01	Name	DI function allocation 2 (activated upon power-on)			Setting Condition	During operation	Related Mode	-
	Value Range	0 to 0xFFFF	Unit	-	Effective Time	Next power-on	Default	0

Used to enable a certain DI function (FunIN.17 to FunIN.32) to be activated immediately at next power-on.

The value of H03-01 is displayed as a hexadecimal on the keypad. When it is converted to a binary value, "bit(n) = 1" indicates the FunIN.(n+1) is active.

H03-01 is input and displayed in decimal on the software tool.

For details about FunIN.17 to FunIN.32, see *"10.22 DI/DO Functions"*.

The following table lists the setpoints of H03-01.

Value (Hex)	Effective Bit	DI Function to Become Active upon Power-on	Function
0000	None	0 (No function)	None
0001	bit0	17	N-CL (Reverse external torque limit)
0002	bit1	18	JOGCMD+ (Forward jog)
0004	bit2	19	JOGCMD– (Forward jog)
0008	bit3	20	PosStep (Step reference)
0010	bit4	21	HX1 (Hand wheel multiplying factor 1)
0020	bit5	22	HX2 (Hand wheel multiplying factor 2)
0040	bit6	23	HX_EN (Hand wheel enable)
0080	bit7	24	GEAR_SEL (Electronic gear ratio switchover)
0100	bit8	25	ToqDirSel (Torque reference direction)
0200	bit9	26	SpdDirSel (Speed reference direction selection)
0400	bit10	27	PosDirSel (Position reference direction selection)
0800	bit11	28	PosInSen (Multi-position reference enable)
1000	bit12	29	XintFree (Interrupt positioning unlock)
2000	bit13	30	None
4000	bit14	31	HomeSwitch (Home switch)
8000	bit15	32	HomingStart (Homing enable)

Set H03-01 to a value listed in the preceding table.

H03-02	Name	DI1 function selection			Setting Condition	During operation	Related Mode	-
	Value Range	0 to 37	Unit	-	Effective Time	At stop	Default	14

Defines the function of DI1.

For details about DI functions, see *"10.22 DI/DO Functions"*.

The DI functions are described in the following table.

Value	Function
0	No function
1	S-ON (Servo ON)
2	ALM-RST (Fault and warning reset)
3	GAIN-SEL (Gain switchover)
4	CMD-SEL (Main/Auxiliary reference switchover)
5	DIR-SEL (Multi-reference direction)
6	CMD1 (Multi-reference switchover 1)
7	CMD2 (Multi-reference switchover 2)
8	CMD3 (Multi-reference switchover 3)
9	CMD4 (Multi-reference switchover 4)
10	M1-SEL (Mode switchover 1)
11	M2-SEL (Mode switchover 2)
12	ZCLAMP (Zero clamp enable)
13	INHIBIT (Position reference inhibited)
14	P-OT (Positive limit switch)
15	N-OT (Negative limit switch)
16	P-CL (Forward external torque limit)
17	N-CL (Reverse external torque limit)
18	JOGCMD+ (Forward jog)

Value	Function
19	JOGCMD– (Forward jog)
20	PosStep (Step reference)
21	HX1 (Hand wheel multiplying factor signal 1)
22	HX2 (Hand wheel multiplying factor signal 2)
23	HX_EN (Hand wheel enable signal)
24	GEAR_SEL (Electronic gear ratio switchover)
25	ToqDirSel (Torque reference direction)
26	SpdDirSel (Speed reference direction selection)
27	PosDirSel (Position reference direction selection)
28	PosInSen (Multi-position reference enable)
29	XintFree (Interrupt positioning unlock)
30	None
31	HomeSwitch (Home switch)
32	HomingStart (Homing enable)
33	XintInhibit (Interrupt positioning inhibited)
34	EmergencyStop (Emergency stop)
35	ClrPosErr (Clear position deviation)
36	V_LmtSel (Internal speed limit source)
37	PulseInhibit (Pulse input inhibited)

Note:

Set H03-02 to a value listed in the preceding table.

Different DI terminals cannot be allocated with the same function. Otherwise, Er.130 (Different DIs allocated with the same function) will occur.

After a DI function is allocated to a DI terminal and the logic of the DI terminal is set to active, do not cancel the DI function allocation. Otherwise, the DI function will remain active.

DI1 to DI7 are low-speed DI terminals. The width of the input signal must be larger than 3 ms.

DI8 and DI9 are high-speed DI terminals. The width of the input signal must be larger than 0.25 ms.

The DI signal in the oscilloscope of the software tool has been filtered. The filter time constant of low-speed DI terminals is 3 ms, and that of high-speed DI terminals is 0.25 ms. The signal, whose width is smaller than the filter time constant, is not displayed.

When the interrupt positioning function is enabled, the servo drive forcibly sets DI9 as the interrupt positioning switch. Do not set H03-18 for other DI functions.

H03-03	Name	DI1 logic selection			Setting Condition	During operation	Related Mode	-
	Value Range	0 to 4	Unit	-	Effective Time	At stop	Default	0

Defines the level logic of DI1 when the function assigned to DI1 is active.

DI1 to DI7 are low-speed DI terminals. The width of the input signal must be larger than 3 ms. Set the valid logic correctly according to the host controller and peripheral circuits. The width of the input signal is shown in the following table.

Value	Terminal Logic When DI Function Valid	Description
0	Low level	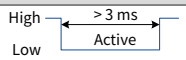
1	High level	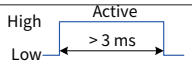
2	Rising edge	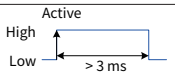
3	Falling edge	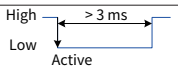
4	Rising edge and falling edge	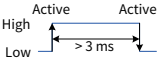

H03-04	Name	DI2 function selection			Setting Condition	During operation	Related Mode	-
	Value Range	0 to 37	Unit	-	Effective Time	At stop	Default	15

H03-05	Name	DI2 logic selection			Setting Condition	During operation	Related Mode	-
	Value Range	0 to 4	Unit	-	Effective Time	At stop	Default	0

H03-06	Name	DI3 function selection			Setting Condition	During operation	Related Mode	-
	Value Range	0 to 37	Unit	-	Effective Time	At stop	Default	13

H03-07	Name	DI3 logic selection			Setting Condition	During operation	Related Mode	-
	Value Range	0 to 4	Unit	-	Effective Time	At stop	Default	0

H03-08	Name	DI4 function selection			Setting Condition	During operation	Related Mode	-
	Value Range	0 to 37	Unit	-	Effective Time	At stop	Default	2

H03-09	Name	DI4 logic selection			Setting Condition	During operation	Related Mode	-
	Value Range	0 to 4	Unit	-	Effective Time	At stop	Default	0

H03-10	Name	DI5 function selection			Setting Condition	During operation	Related Mode	-
	Value Range	0 to 37	Unit	-	Effective Time	At stop	Default	1

Defines the function of DI5.

The S-ON function must be allocated to a DI. Otherwise, the servo drive cannot operate. DI5 is allocated with FunIN.1: S-ON by default.

H03-11	Name	DI5 logic selection			Setting Condition	During operation	Related Mode	-
	Value Range	0 to 4	Unit	-	Effective Time	At stop	Default	0
Defines the level logic of DI5 when the function allocated to DI5 is active. When a low-speed DI terminal is allocated with S-ON function, the valid signal width must be larger than (H02-18) + 3 ms. After you re-allocate the S-ON function, Er.941 (Parameter modifications activated at next power-on) will occur. In this case, the servo drive must be powered on again. Otherwise, the S-ON function is still determined by the DI or VDI.								

H03-12	Name	DI6 function selection			Setting Condition	During operation	Related Mode	-
	Value Range	0 to 37	Unit	-	Effective Time	At stop	Default	12

H03-13	Name	DI6 logic selection			Setting Condition	During operation	Related Mode	-
	Value Range	0 to 4	Unit	-	Effective Time	At stop	Default	0

H03-14	Name	DI7 function selection			Setting Condition	During operation	Related Mode	-
	Value Range	0 to 37	Unit	-	Effective Time	At stop	Default	3

H03-15	Name	DI7 logic selection			Setting Condition	During operation	Related Mode	-
	Value Range	0 to 4	Unit	-	Effective Time	At stop	Default	0

H03-16	Name	DI8 function selection			Setting Condition	During operation	Related Mode	-
	Value Range	0 to 37	Unit	-	Effective Time	At stop	Default	31
Defines the function of DI8.								

H03-17	Name	DI8 logic selection			Setting Condition	During operation	Related Mode	-
	Value Range	0 to 4	Unit	-	Effective Time	At stop	Default	0

Defines the level logic of DI8 when the function allocated to DI8 is active.

DI8 and DI9 are high-speed DI terminals. The width of the input signal must be larger than 0.25 ms. Set the valid logic correctly according to the host controller and peripheral circuits. The width of the input signal is shown in the following table.

Value	Terminal Logic When DI Function Valid	Description
0	Low level	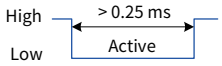
1	High level	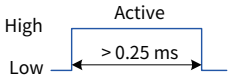
2	Rising edge	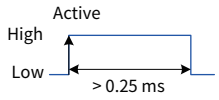
3	Falling edge	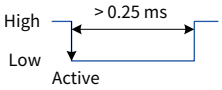
4	Rising edge and falling edge	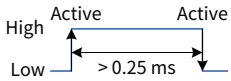

H03-18	Name	DI9 function selection			Setting Condition	During operation	Related Mode	-
	Value Range	0 to 37	Unit	-	Effective Time	At stop	Default	0
Defines the function of DI9.								

H03-19	Name	DI9 logic selection			Setting Condition	During operation	Related Mode	-
	Value Range	0 to 4	Unit	-	Effective Time	At stop	Default	0
Defines the level logic of DI9 when the function allocated to DI9 is active. When the interrupt positioning function is enabled, the servo drive forcibly sets DI9 as the interrupt positioning switch. Do not set H03-18 for other DI functions. Otherwise, Er.130 will occur. In this case, the DI9 logic is forced to be edge valid.								

H03-34	Name	DI function allocation 3 (activated upon power-on)			Setting Condition	During operation	Related Mode	-
	Value Range	0 to 0xFFFF	Unit	-	Effective Time	Next power-on	Default	0

Used to enable a certain DI function (FunIN.33 to FunIN.37) to be activated immediately at next power-on.

The value of H03-34 is displayed as a hexadecimal on the keypad. When it is converted to a binary value, "bit(n) = 1" indicates the FunIN.(n+1) is active.

H03-34 is input and displayed in decimal on the software tool. Remember data conversion during the use.

For details about FunIN.33 to FunIN.37, see *"10.22 DI/DO Functions"*.

The following table lists the setpoints of H03-34.

Value (Hex)	Effective Bit	DI Function to Become Active upon Power-on	Function
0000	None	0 (No function)	None
0001	bit0	33	XintInhibit (Interrupt positioning inhibited)
0002	bit1	34	EmergencyStop (Emergency stop)
0004	bit2	35	ClrPosErr (Clear position deviation)
0008	bit3	36	V_LmtSel (Internal speed limit source)
0010	bit4	37	PulseInhibit (Pulse input inhibited)
0020	bit5	38	None
0040	bit6	39	None
0080	bit7	40	None
0100	bit8	41	None
0200	bit9	42	None
0400	bit10	43	None
0800	bit11	44	None
1000	bit12	45	None
2000	bit13	46	None
4000	bit14	47	None
8000	bit15	48	None

Set H03-34 to a value listed in the preceding table.

H03-35	Name	DI function allocation 4 (activated upon power-on)			Setting Condition	During operation	Related Mode	-
	Value Range	0 to 0xFFFF	Unit	-	Effective Time	Next power-on	Default	0

Used to enable a certain DI function to be activated immediately at next power-on.

The value of H03-35 is displayed as a hexadecimal on the keypad. When it is converted to a binary value, "bit(n) = 1" indicates the FunIN.(n+1) is active.

H03-05 is input and displayed in decimal on the software tool. Remember data conversion during the use.

The following table lists the setpoints of H03-35.

Value (Hex)	Effective Bit	DI Function to Become Active upon Power-on	Function
0000	None	0 (No function)	None
0001	bit0	49	
0002	bit1	50	
0004	bit2	51	
0008	bit3	52	
0010	bit4	53	
0020	bit5	54	
0040	bit6	55	
0080	bit7	56	
0100	bit8	57	
0200	bit9	58	
0400	bit10	59	
0800	bit11	60	
1000	bit12	61	
2000	bit13	62	
4000	bit14	63	
8000	bit15	64	

Set H03-35 to a value listed in the preceding table.

H03-50	Name	AI1 offset			Setting Condition	During operation	Related Mode	-
	Value Range	–5000 to +5000	Unit	mV	Effective Time	Immediately	Default	0

Defines the actual AI1 input voltage when the drive sampling voltage is 0 after zero drift correction.

H03-51	Name	AI1 input filter time constant			Setting Condition	During operation	Related Mode	-
	Value Range	0 to 655.35	Unit	ms	Effective Time	Immediately	Default	2.00

Defines the filter time constant of AI1 input voltage signal.

The setting of H03-56 can prevent motor reference fluctuation due to instable analog input voltage and eliminate motor malfunction due to signal interference.

The filter function cannot eliminate or suppress the zero drift or dead zone.

H03-53	Name	AI1 dead zone			Setting Condition	During operation	Related Mode	-
	Value Range	0 to 1000.0	Unit	mV	Effective Time	Immediate-ly	Default	10.0
Defines the AI1 input voltage range when the drive sampling voltage is 0.								

H03-54	Name	AI1 zero drift			Setting Condition	During operation	Related Mode	-
	Value Range	–500.0 to +500.0	Unit	mV	Effective Time	Immediate-ly	Default	0.0

Zero drift indicates the value of the drive sampling voltage relative to GND upon zero AI voltage.

Relationship Between Sampling Voltage and AI Input Voltage after Filter	
No Offset	With Offset (Offset > 0)
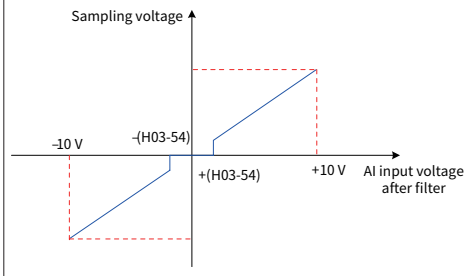	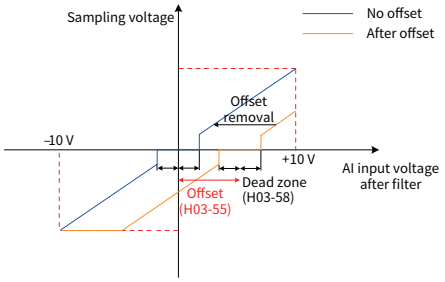

Set H0D-10 (Automatic adjustment of analog channels) to 1 (AI1 adjustment) to perform automatic adjustment on AI1 zero drift. The AI1 zero drift adjusted will be saved into H03-54.

If zero drift is larger than 500.0 mV, Er.831 (AI zero drift too large) will occur.

When the sampling voltage is larger than 11.5 V, Er.834 (AD sampling overvoltage) will occur.

In the torque control mode, if the torque reference source is analog voltage setting, see *"5.4.1 Torque Reference Input Setting"* for details about the setting of AI1.

H03-55	Name	AI2 offset			Setting Condition	During operation	Related Mode	-
	Value Range	–5000 to +5000	Unit	mV	Effective Time	Immediate-ly	Default	0

H03-56	Name	AI2 input filter time constant			Setting Condition	During operation	Related Mode	-
	Value Range	0 to 655.35	Unit	ms	Effective Time	Immediate-ly	Default	2.00

H03-58	Name	AI2 dead zone			Setting Condition	During operation	Related Mode	-
	Value Range	0 to 1000.0	Unit	mV	Effective Time	Immediate-ly	Default	10.0

H03-59	Name	AI2 zero drift			Setting Condition	During operation	Related Mode	-
	Value Range	–500.0 to +500.0	Unit	mV	Effective Time	Immediate-ly	Default	0.0

H03-80	Name	Speed corresponding to analog 10 V			Setting Condition	At stop	Related Mode	-
	Value Range	0 to 6000	Unit	RPM	Effective Time	Immediate-ly	Default	3000

Defines the corresponding motor speed when the sampling voltage is 10 V.

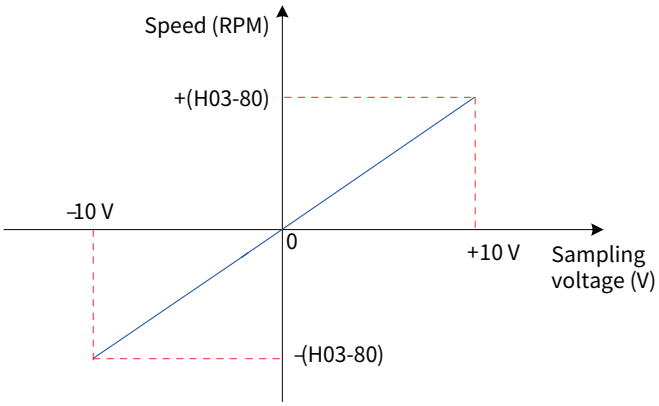

$$\text{Speed reference} = \frac{\text{Sampling voltage}}{10} \times (\text{H03-80})$$

In the position control mode, speed feedforward is used and the feedforward source is AI1 or AI2 (H05-19 set to 2 or 3).

In the speed control mode, the speed reference source is AI (H06-00 (H06-01) set to 1 or 2).

In the torque control mode, the speed limit source is AI (H07-18 set to 1 or 2).

H03-81	Name	Torque corresponding to analog 10 V			Setting Condition	At stop	Related Mode	-
	Value Range	1.00 to 8.00	Unit	Multiple	Effective Time	Immediate-ly	Default	1.00

Defines the corresponding torque when the sampling voltage is 10 V.

The torque value is expressed in multiples of the rated motor torque. 1.00 time means the rated motor torque.

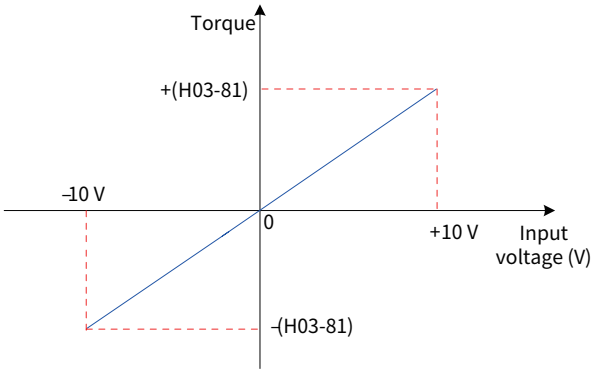

$$\text{Torque reference} = \frac{\text{Sampling voltage}}{10} \times (\text{H03-81})$$

In the torque control mode, the torque reference source is AI (H07-00 (H07-01) set to 1 or 2).

In the torque control mode, the torque limit source is AI (H07-08 set to 1 or 2).

9.2.5 Group H04: Terminal Output Parameters

H04-00	Name	DO1 function selection			Setting Condition	During operation	Related Mode	-
	Value Range	0 to 22	Unit	-	Effective Time	At stop	Default	1

Defines the function of DO1.

For details about DO functions, see *"10.22 DI/DO Functions"*.

The DO functions are described in the following table.

Value	Function	Value	Function
0	No function	12	ALMO1: 3-digit fault code output
1	S-RDY: Servo ready	13	ALMO2: 3-digit fault code output
2	TGON: Motor rotation output	14	ALMO3: 3-digit fault code output
3	ZERO: Zero speed signal	15	Xintcoin: Interrupt positioning completed
4	V-CMP: Speed matching	16	HomeAttain: Homing completed
5	COIN: Positioning completed	17	ElecHomeAttain: Electrical homing completed
6	NEAR: Positioning near	18	ToqReach: Torque reached
7	C-LT: Torque limit	19	V-Arr: Speed reached
8	V-LT: Speed limit	20	AngIntRdy: Angle auto-tuning output
9	BK: Brake output	21	DB: Dynamic braking output
10	WARN: Warning output	22	CmdOk: Internal reference output
11	ALM: Fault output		

Set H04-00 to a value listed in the preceding table.

A DO function can be allocated to different DO terminals, including DOs and VDOs.

H04-01	Name	DO1 logic selection			Setting Condition	During operation	Related Mode	-
	Value Range	0 to 1	Unit	-	Effective Time	At stop	Default	0

Defines the level logic of DO1 when the function assigned to DO1 is active.

DO1 to DO5 are low-speed DO terminals and their minimum output signal width is 1 ms. The host controller must have correct design and ensure that the valid DO logic change is received.

Value	DO1 Logic When DO1 Function Enabled	Transistor State	Min. Signal Width
0	Low level	ON	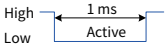
1	High level	OFF	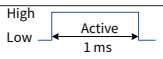

Check the setting of H04-22 (DO source) before receiving the DO logic change to check whether the DO output level is determined by the drive status or communication.

H04-02	Name	DO2 function selection			Setting Condition	During operation	Related Mode	-
	Value Range	0 to 22	Unit	-	Effective Time	At stop	Default	5

H04-03	Name	DO2 logic selection			Setting Condition	During operation	Related Mode	-
	Value Range	0 to 1	Unit	-	Effective Time	At stop	Default	0

H04-04	Name	DO3 function selection			Setting Condition	During operation	Related Mode	-
	Value Range	0 to 22	Unit	-	Effective Time	At stop	Default	3

H04-05	Name	DO3 logic selection			Setting Condition	During operation	Related Mode	-
	Value Range	0 to 1	Unit	-	Effective Time	At stop	Default	0

H04-06	Name	DO4 function selection			Setting Condition	During operation	Related Mode	-
	Value Range	0 to 22	Unit	-	Effective Time	At stop	Default	11

H04-07	Name	DO4 logic selection			Setting Condition	During operation	Related Mode	-
	Value Range	0 to 1	Unit	-	Effective Time	At stop	Default	0

H04-08	Name	DO5 function selection			Setting Condition	During operation	Related Mode	-
	Value Range	0 to 22	Unit	-	Effective Time	At stop	Default	16

H04-09	Name	DO5 logic selection			Setting Condition	During operation	Related Mode	-
	Value Range	0 to 1	Unit	-	Effective Time	At stop	Default	0

H04-22	Name	DO source selection			Setting Condition	At stop	Related Mode	-
	Value Range	0 to 31	Unit	-	Effective Time	Immediate-ly	Default	0

Defines whether the logic of a physical DO terminal (DO1 to DO5) is defined by the actual state of the drive or by communication.

The value of H04-22 is displayed in decimal on the keypad. When the value is converted to a binary equivalent:

If bit(n) in H04-22 is 0, the logic of DO(n+1) is determined by the drive state.

If bit(n) is 1, the logic of DO(n+1) is determined by communication (H31-04).

Value (Decimal)	Value (Binary)					DO Logic	
	bit4	bit3	bit2	bit1	bit0	Defined by the Drive State	Defined by Communication (H31-04)
	DO5	DO4	DO3	DO2	DO1		
0	0	0	0	0	0	DO1 to DO5	None
1	0	0	0	0	1	DO2 to DO5	DO1
...	...	...	...	...	...	...	...
31	1	1	1	1	1	None	DO1 to DO5

Set H04-22 to a value listed in the preceding table.

Be cautious when determining the logic of the DO terminal allocated with FunOUT.9: BK by communication.

Use DOs according to the following procedure:

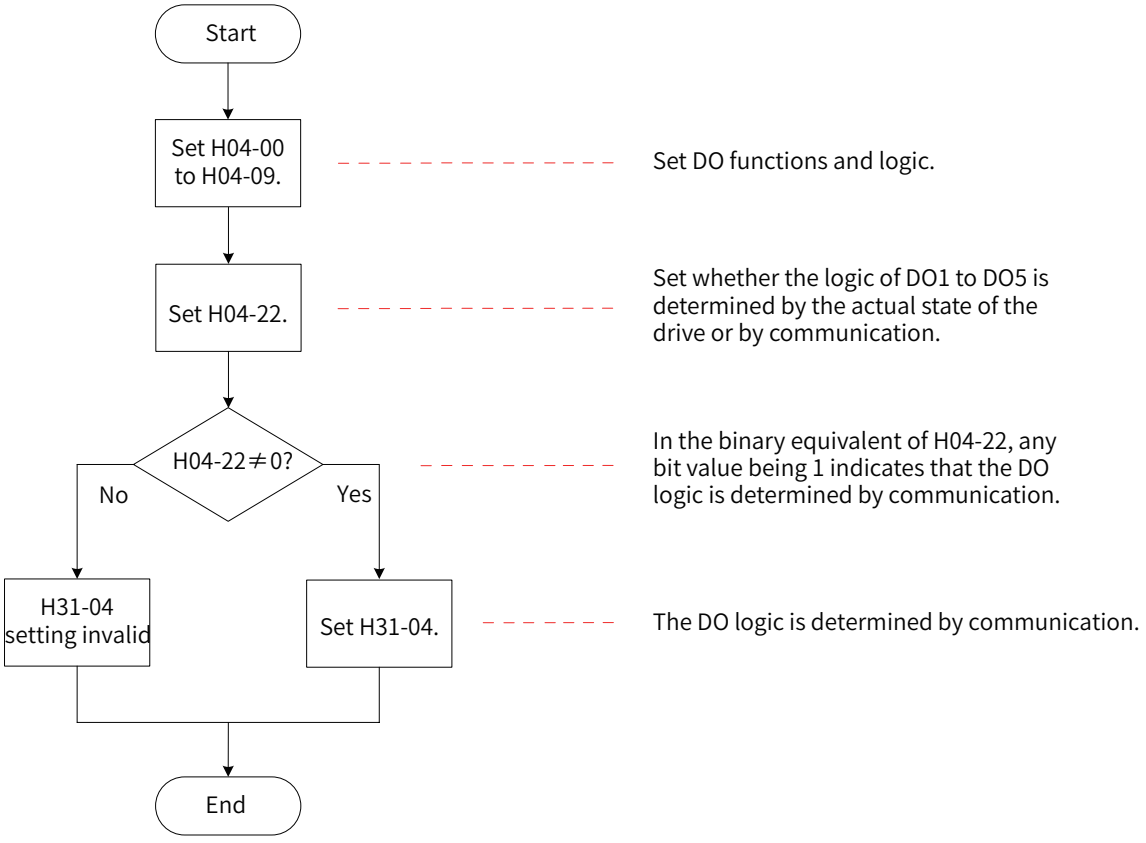

H31-04 is not displayed on the keypad and can only be modified through communication. For H31-04, "bit(n) = 1" indicates the logic of DO(n+1) is active. "bit(n) = 0" indicates the logic of DO(n+1) is inactive.

The DO output signal state can be read through monitoring parameters. For details, see description about *H0B-05* in Chapter 8.

H04-50	Name	AO1 signal source			Setting Condition	During operation	Related Mode	-
	Value Range	0 to 9	Unit	-	Effective Time	Immediate-ly	Default	0

Sets the AO1 output signal.

Value	AO1 Signal	Description
0	Motor speed (1 V/1000 RPM)	When the actual motor speed is 1000 RPM, the AO1 output voltage is 1 V in theory.
1	Speed reference (1 V/1000 RPM)	The motor speed reference indicates the speed loop input reference, including: Position loop output in the position control mode Speed reference in the speed control mode When the speed reference is 1000 RPM, the AO1 output voltage is 1 V in theory.
2	Torque reference (1 V/1 time of rated torque)	Motor torque reference, including: Speed loop output in the position or speed control mode Torque reference in the torque control mode When the torque reference is the rated motor torque, the AO1 output voltage is 1 V in theory.
3	Position deviation (0.05 V/1 reference unit)	Position deviation value which has not been divided or multiplied by the electronic gear ratio When the position deviation is one reference unit, the AO1 output voltage is 0.05 V in theory.
4	Position deviation (0.05 V/1 encoder unit)	Position deviation value which has been divided or multiplied by the electronic gear ratio When the position deviation is one encoder unit, the AO1 output voltage is 0.05 V in theory.
5	Position reference speed (1 V/1000 RPM)	It indicates the motor speed corresponding to the position reference output by each position loop cyclically in the position control mode. When the position reference speed is 1000 RPM, the AO1 output voltage is 1 V in theory. The filter time constant of position reference speed can be set in H0A-27.
6	Positioning completed	Positioning completed (COIN) signal Active: The AO1 output voltage is 5 V. Inactive: The AO1 output voltage is 0 V.
7	Speed feedforward (1 V/1000 RPM)	In the position mode, the output signal of speed feedforward control corresponds to some speed reference sources. When the speed reference of speed feedforward control output is 1000 RPM, the AO1 output voltage is 1 V in theory.
8	AI1 voltage	AI1 sampling voltage
9	AI2 voltage	AI2 sampling voltage

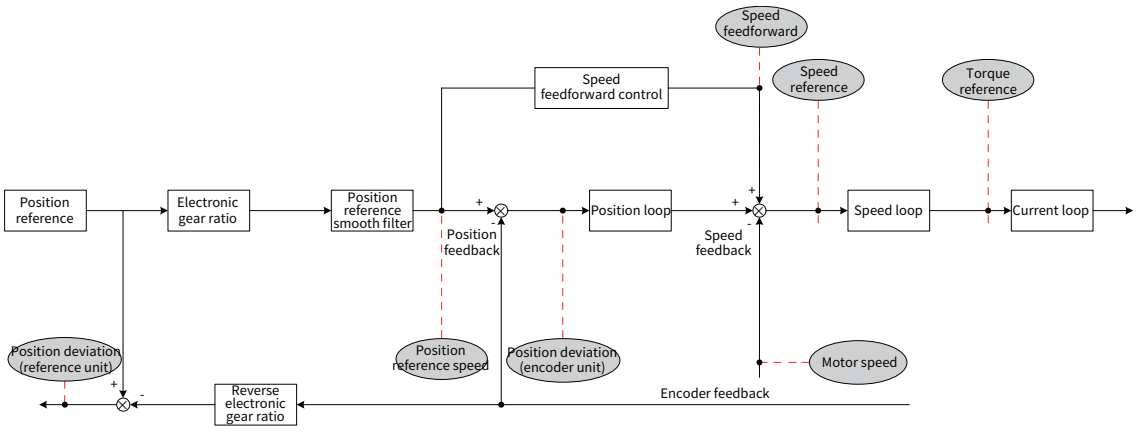

H04-51	Name	AO1 offset voltage			Setting Condition	During operation	Related Mode	-
	Value Range	–10000 to +10000	Unit	mV	Effective Time	Immediate-ly	Default	5000
Defines the actual AO1 output voltage after offset when the output voltage is 0 V in theory.								

H04-52	Name	AO1 multiplying factor			Setting Condition	During operation	Related Mode	-
	Value Range	–99.99 to +99.99	Unit	Multiple	Effective Time	Immediate-ly	Default	1.00

Defines the actual AO1 output voltage after amplification when the output voltage is 1 V in theory.

For example, H04-50 is set to 0 (AO1 output being motor speed).

Assume that the motor speed x varies between –3000 RPM and +3000 RPM, and the range of AO1 output voltage y is 0 mV to 5000 mV.

$$\begin{cases} -3000\times k+b = 0 \\ 3000\times k+b = 5000 \end{cases}$$

In the preceding formula, k is 0.83, b is 2500. Therefore, H04-51 is 2500 (mV) and H04-52 is 0.83 (times).

H04-53	Name	AO2 signal source			Setting Condition	During operation	Related Mode	-
	Value Range	0 to 9	Unit	-	Effective Time	Immediate-ly	Default	0

H04-54	Name	AO2 offset voltage			Setting Condition	During operation	Related Mode	-
	Value Range	–10000 to +10000	Unit	mV	Effective Time	Immediate-ly	Default	5000

H04-55	Name	AO2 multiplying factor			Setting Condition	During operation	Related Mode	-
	Value Range	–99.99 to +99.99	Unit	Multiple	Effective Time	Immediate-ly	Default	1.00

9.2.6 Group H05: Position Control Parameters

H05-00	Name	Position reference source			Setting Condition	At stop	Related Mode	P
	Value Range	0 to 2	Unit	-	Effective Time	Immediate-ly	Default	0

Defines the position reference source in the position control mode.

Value	Reference Source	Description
0	Pulse reference	The host controller or other pulse generators generate pulses, which are input to the servo drive through hardware terminals. The hardware terminal is selected in H05-01.
1	Step	The step displacement is set in H05-05. The step reference is sent by the DI terminal allocated with FunIN.20.
2	Multi-position reference	The running mode of the multi-position function is set by parameters in group H11. The multi-position reference is sent by the DI terminal allocated with FunIN.28.

Pulse reference is external position reference, and step reference and multi-position reference are internal position references.

H05-01	Name	Pulse reference input terminal selection			Setting Condition	At stop	Related Mode	P
	Value Range	0 to 1	Unit	-	Effective Time	Immediate-ly	Default	0

When the position reference source is set to pulse input (H05-00 set to 0) in the position control mode, the hardware input terminal is selected according to the input pulse frequency.

Value	Input Terminal	Interface Mode
0	Low speed	Differential input terminals: PULSE+, PULSE–, SIGN+, and SIGN– 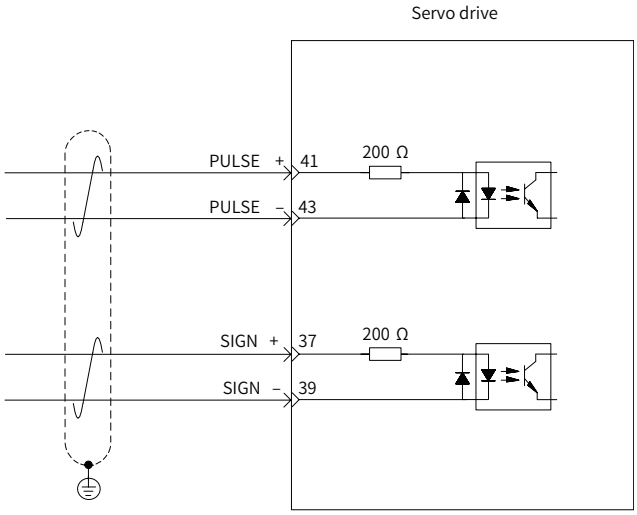 Max. pulse frequency: 500 kpps
		Open-collector input terminals: PULLHI, PULSE+, PULSE–, SIGN+, and SIGN– 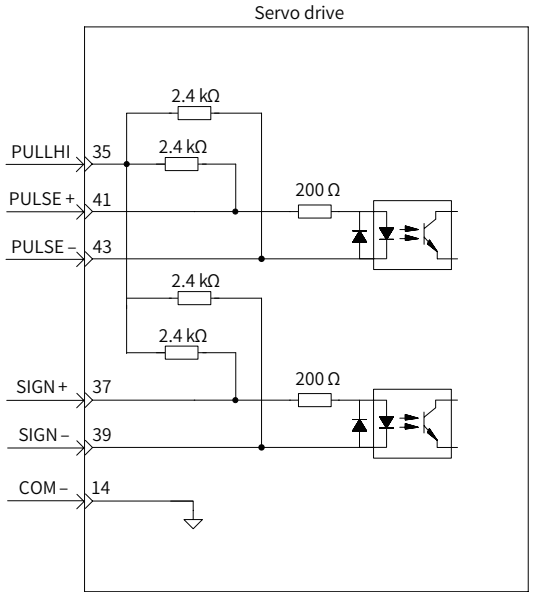 Max. pulse frequency: 200 kpps

(Next page)

H05-01	Name	Pulse reference input terminal selection			Setting Condition	At stop	Related Mode	P
	Value Range	0 to 1	Unit	-	Effective Time	Immediate-ly	Default	0

When the position reference source is set to pulse input (H05-00 set to 0) in the position control mode, the hardware input terminal is selected according to the input pulse frequency.

Value	Input terminal	Interface Mode
1	High speed	Differential input terminals: HPULSE+, HPULSE–, HSIGN+, and HSIGN– 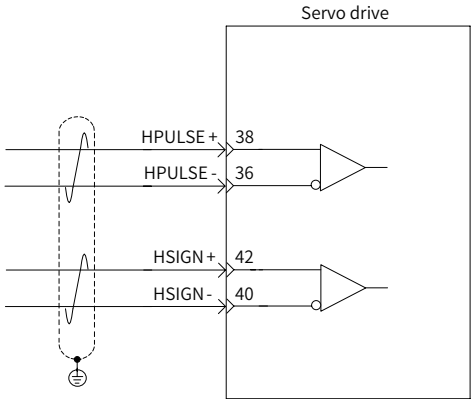 Max. pulse frequency: 4 Mpps

H05-02	Name	Pulses per revolution			Setting Condition	At stop	Related Mode	P
	Value Range	0 to 1048576	Unit	P/r	Effective Time	Next pow-er-on	Default	0

Sets the number of position references when the motor rotates one revolution.

When H05-02 is set to 0, the electronic gear ratios 1 and 2 (H05-07 to H05-13) and electronic gear ratio switchover condition (H05-39) are valid.

When H05-02 is not 0, $\text{Electronic gear ratio } \frac{B}{A} = \frac{\text{Encoder resolution}}{\text{H05-02}}$. In this case, the electronic gear ratios 1 and 2 are invalid.

The encoder resolution is 1048576 P/r.

H05-04	Name	First-order low-pass filter time constant			Setting Condition	At stop	Related Mode	P
	Value Range	0 to 6553.5	Unit	ms	Effective Time	Immediate-ly	Default	0.0

Sets the time constant of first-order low-pass filter for position reference (encoder unit).

If position reference P is rectangular wave or trapezoidal wave, the position reference after first-order low-pass filtering is as follows:

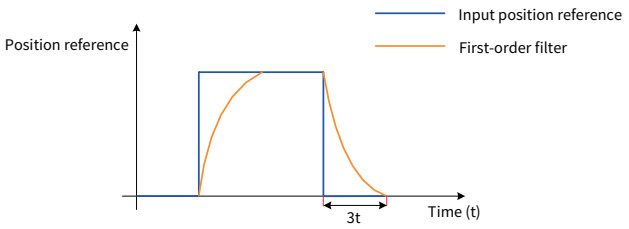

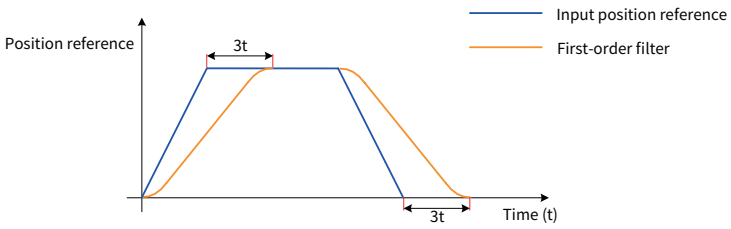

This function does not affect the displacement value (position reference sum).

An excessively high setpoint delays the response. Set a proper filter time constant based on actual conditions.

H05-05	Name	Step			Setting Condition	At stop	Related Mode	P
	Value Range	–9999 to +9999	Unit	Reference unit	Effective Time	Immediate-ly	Default	50

Sets the position reference sum when the main position reference source is set to step setting (H05-00 set to 1).

Motor displacement = H05-05 x Electronic gear ratio. Positive/negative of the setting of H05-05 determines forward/reverse rotation of the motor.

H05-06	Name	Moving average filter time constant			Setting Condition	At stop	Related Mode	P
	Value Range	0 to 128.0	Unit	ms	Effective Time	Immediate-ly	Default	0.0

Sets the time constant of moving average filter for position reference (encoder unit). If position reference P is rectangular wave or trapezoidal wave, the position reference after moving average filter is as follows:

Position Reference Being Rectangular Wave	Position Reference Being Trapezoidal Wave
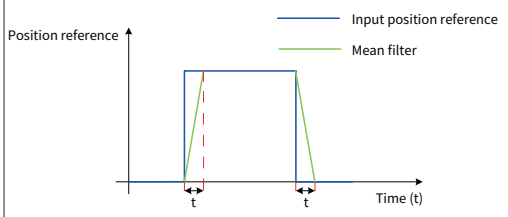	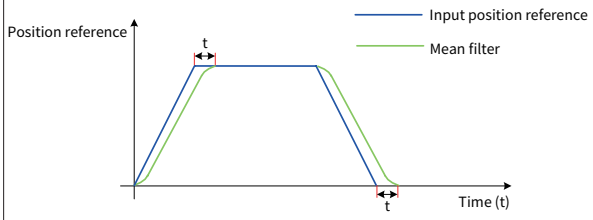

This function does not affect the displacement value (position reference sum). An excessively high setpoint delays the response. Set a proper filter time constant based on actual conditions.

H05-07	Name	Electronic gear ratio 1 (numerator)			Setting Condition	During operation	Related Mode	P
	Value Range	1 to 1073741824	Unit	-	Effective Time	Immediately	Default	1048576

The default value is 1048576.

Defines the numerator of electronic gear ratio 1 for frequency-division/multiplication of position reference (reference unit).

It is valid when H05-02 (Pulses per revolution) is set to 0.

H05-09	Name	Electronic gear ratio 1 (denominator)			Setting Condition	During operation	Related Mode	P
	Value Range	1 to 1073741824	Unit	-	Effective Time	Immediately	Default	10000

The default value is 10000.

Defines the denominator of electronic gear ratio 1 for frequency-division/multiplication of position reference (reference unit).

It is valid when H05-02 (Pulses per revolution) is set to 0.

H05-11	Name	Electronic gear ratio 2 (numerator)			Setting Condition	During operation	Related Mode	P
	Value Range	1 to 1073741824	Unit	-	Effective Time	Immediately	Default	1048576

The default value is 1048576.

Defines the numerator of electronic gear ratio 2 for frequency-division/multiplication of position reference (reference unit).

It is valid when H05-02 (Pulses per revolution) is set to 0.

H05-13	Name	Electronic gear ratio 2 (denominator)			Setting Condition	During operation	Related Mode	P
	Value Range	1 to 1073741824	Unit	-	Effective Time	Immediately	Default	10000

The default value is 10000.

Defines the denominator of electronic gear ratio 2 for frequency-division/multiplication of position reference (reference unit).

It is valid when H05-02 (Pulses per revolution) is set to 0.

H05-15	Name	Pulse reference form			Setting Condition	At stop	Related Mode	P
	Value Range	0 to 3	Unit	-	Effective Time	Next power-off	Default	0

Sets the input pulse form when the main position reference source is pulse input (H05-00 set to 0).

The following table describes the maximum frequencies and minimum time widths of position pulse references input from different terminals.

H02-02	H05-15	Pulse Form	Signal	Pulse Diagram of Forward RUN	Pulse Diagram of Reverse RUN
0	0	Pulse + direction Positive logic	PULSE SIGN	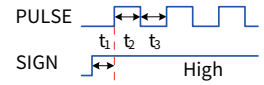	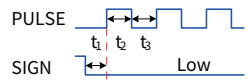
	1	Pulse + direction Negative logic	PULSE SIGN	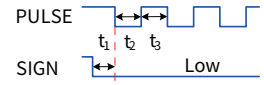	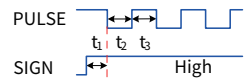
	2	Phase A + phase B quadrature pulse 4-frequency multiplication	PULSE (phase A) SIGN (phase B)	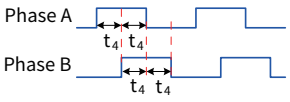 Phase A leads phase B by 90° .	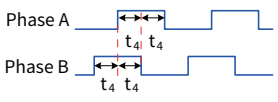 Phase B leads phase A by 90° .
	3	CW + CCW	PULSE (CW) SIGN (CCW)	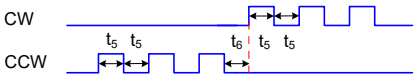 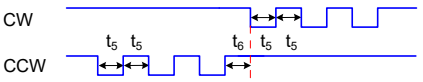	
1	0	Pulse + direction Positive logic	PULSE SIGN	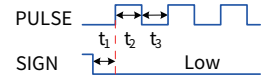	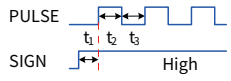
	1	Pulse + direction Negative logic	PULSE SIGN	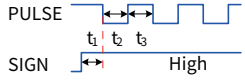	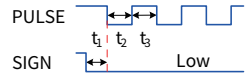
	2	Phase A + phase B quadrature pulse 4-frequency multiplication	PULSE (phase A) SIGN (phase B)	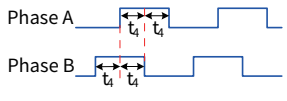 Phase B leads phase A by 90° .	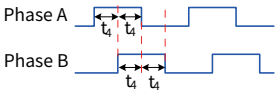 Phase A leads phase B by 90° .
	3	CW + CCW	PULSE (CW) SIGN (CCW)	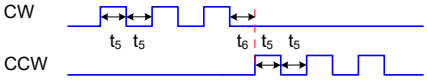 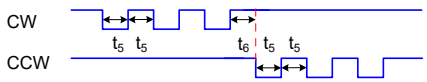	

The rising time and fall time of position pulse references must be smaller than 0.1 μs.

Input Terminal		Max. Frequency	Min. Time Width (μs)					
			t_1	t_2	t_3	t_4	t_5	t_6
High-speed pulse input terminal		4 Mpps	0.125	0.125	0.125	0.25	0.125	0.125
Low-speed pulse input terminal	Differential input	500 kpps	1	1	1	2	1	1
	Open collector input	200 kpps	2.5	2.5	2.5	5	2.5	2.5

H05-16	Name	Clear action			Setting Condition	At stop	Related Mode	P
	Value Range	0 to 2	Unit	-	Effective Time	Immediate-ly	Default	0

Defines the condition for clearing the position deviation.

Position deviation = (Position reference – Position feedback) (encoder unit)

Value	Clear Condition	Description
0	Clear position deviation when S-ON is switched off or when a fault occurs.	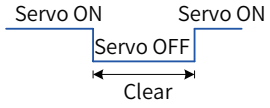
1	Clear position deviation pulses when S-ON is switched off or when a fault occurs.	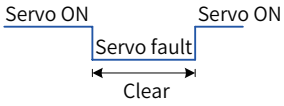
2	Clear position deviation when S-ON is switched off or when the ClrPosErr signal is input from DI.	Allocate a DI terminal with the DI function 35 (FunIN.35: ClrPosErr, Clear position deviation). You are recommended to use a high-speed DI terminal and set the terminal logic to edge valid. 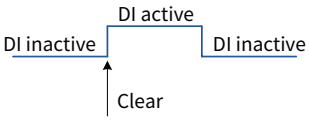 (Rising edge valid)
		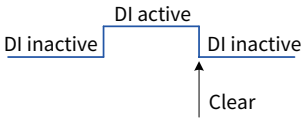 (Falling edge valid)

If the absolute value of position deviation is larger than the value of H0A-10 (Threshold of excessive position deviation), Er.B00 (Excessive position deviation) will occur.

H05-17	Name	Number of encoder frequency-division pulses			Setting Condition	At stop	Related Mode	-
	Value Range	35 to 32767	Unit	P/r	Effective Time	Next pow-er-on	Default	2500

Defines the number of pulses outputted by PAO or PBO per revolution.

After 4-frequency multiplication, the pulse output resolution is:

Pulse output resolution per revolution = (H05-17) x 4

H05-19	Name	Speed feedforward control			Setting Condition	At stop	Related Mode	P
	Value Range	0 to 3	Unit	-	Effective Time	Immediate-ly	Default	1

Defines the source of the speed loop feedforward signal.

In the position control mode, the speed feedforward control can improve the position reference responsivity.

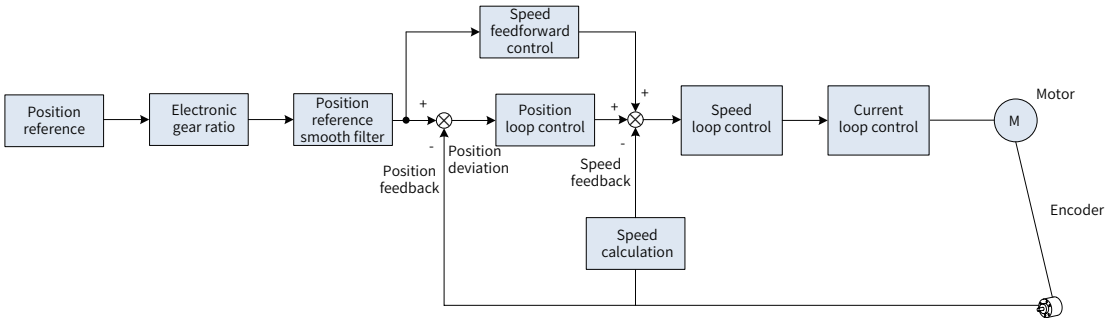

Value	Speed Feedforward Source	Description
0	No speed feedforward	-
1	Internal speed feedforward	Defines the speed corresponding to the position reference (encoder unit) as the speed feedforward source.
2	AI1 used as speed feedforward input	Defines the speed corresponding to the AI1 input as the speed feedforward source. For AI1 setting, see descriptions of H03-80, H03-50, H03-51, H03-53, and H03-54.
3	AI2 used as speed feedforward input	Defines the speed corresponding to the AI2 input as the speed feedforward source. For AI2 setting, see descriptions of H03-80, H03-55, H03-56, H03-58, and H03-59.

Speed feedforward control parameters are H08-18 (Speed feedforward filter time constant) and H08-19 (Speed feedforward gain). For details about these parameters, see *"Chapter 6 Adjustment"*.

H05-20	Name	Condition for positioning completed/ near signal output			Setting Condition	At stop	Related Mode	P
	Value Range	0 to 2	Unit	-	Effective Time	Immediate-ly	Default	0

In the position control mode, when the absolute value of position deviation is within the setting of H05-21 (Threshold of positioning completed) during drive running, the servo drive outputs the positioning completed signal (FunOUT.5: COIN) or positioning near signal (FunOUT.6: NEAR. You can define the condition for positioning completed/near signal output in H05-20.

Value	Output Condition
0	The absolute value of position deviation is smaller than the value of H05-21.
1	The absolute value of position deviation is smaller than the value of H05-21 and the position reference after filtering is 0.
2	The absolute value of position deviation is smaller than the value of H05-21 and the position reference is 0.
3	The absolute value of position deviation is smaller than the value of H05-21/H05-22 and the position reference is 0, and the positioning completed/near signal is hold for the time set in H05-60.

H05-21	Name	Positioning completed threshold			Setting Condition	During operation	Related Mode	P
	Value Range	1 to 65535	Unit	Encoder/reference unit	Effective Time	Immediately	Default	734

The default value is 734.

Defines the threshold of the absolute value of position deviation when the drive outputs the positioning completed signal (COIN).

Positioning completed signal: FunOUT.5: COIN

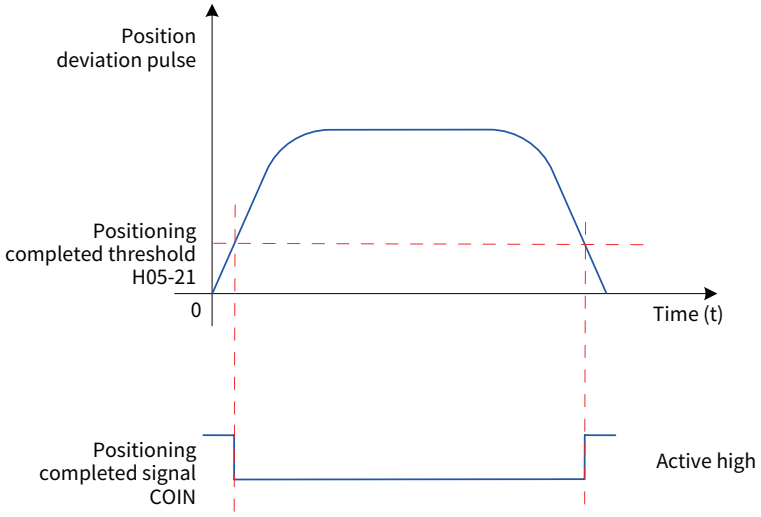

The positioning completed signal is valid only when the servo drive is in the running state in the position control mode.

H05-22	Name	Positioning near threshold			Setting Condition	During operation	Related Mode	P
	Value Range	1 to 65535	Unit	Encoder/reference unit	Effective Time	Immediately	Default	65535

Defines the threshold of the absolute value of position deviation when the drive outputs the positioning near signal (NEAR).

Positioning near signal: FunOUT.6: NEAR

Note:

H05-22 must be greater than H05-21.

H05-21 reflects only the absolute threshold when the positioning completed signal is active. It is irrelevant to the positioning accuracy.

When the speed feedforward gain (H08-19) is large or the servo drive runs at a low speed, the absolute position deviation is small. A large value of H05-21 in this case will cause the positioning completed signal to be always active. Decrease H05-21 to improve the effectiveness of this signal.

When both the value of H05-21 and the position deviation are small, change the output condition of positioning completed/near signal in H05-20.

H05-23	Name	Interrupt positioning selection			Setting Condition	At stop	Related Mode	P
	Value Range	0 to 1	Unit	-	Effective Time	Next power-on	Default	0

Defines whether to enable interrupt positioning.

Value	Interrupt Positioning
0	Disabled
1	Enabled

When this function is enabled, DI9 is forced to input the interrupt positioning signal and its logic is edge valid.

The interrupt positioning signal is shielded when the homing function is used.

When the servo motor is performing interrupt positioning, other internal and external position references are shielded. After interrupt positioning is completed, the condition for responding to other position references is determined by H05-29.

H05-24	Name	Displacement of interrupt positioning			Setting Condition	During operation	Related Mode	P
	Value Range	0 to 1073741824	Unit	Reference unit	Effective Time	Immediately	Default	10000

Defines the position reference for interrupt positioning.

When H05-24 is set to 0, the interrupt positioning function is disabled.

Actual motor position reference (encoder unit) for interrupt positioning = H05-24 x Electronic gear ratio

If the position deviation is large before the interrupt positioning function is enabled and the setting of H05-24 is too small, the motor will rotate in the reverse direction.

H05-26	Name	Constant running speed at interrupt positioning			Setting Condition	During operation	Related Mode	P
	Value Range	0 to 6000	Unit	RPM	Effective Time	Immediately	Default	200

Defines the maximum motor speed for interrupt positioning.

Value	Motor Speed Before Function Enabled	Max. Speed for Interrupt Positioning	Motor Rotation Direction for Interrupt Positioning
0	< 1	1	-
	⩾ 1	Motor speed before the interrupt positioning function is enabled	Same as the motor rotation direction before this function is enabled
1 to 6000	-	Setting of H05-26	Determined by H02-02 (Rotation direction)

H05-27	Name	Acceleration/Deceleration time of interrupt positioning			Setting Condition	During operation	Related Mode	P
	Value Range	0 to 1000	Unit	ms	Effective Time	Immediately	Default	10

Defines the time for the motor to accelerate from 0 RPM to 1000 RPM or decelerate from 1000 RPM to 0 RPM for interrupt positioning.

The actual motor acceleration time t during interrupt positioning is:

$$t = \frac{|\text{H05-26} - \text{Motor speed before interrupt positioning}|}{1000} \times (\text{H05-27})$$

H05-29	Name	Interrupt positioning cancellation signal selection			Setting Condition	During operation	Related Mode	P
	Value Range	0 to 1	Unit	-	Effective Time	Immediately	Default	1

Sets whether to unlock the interrupt positioning signal.

Value	Meaning	Description
0	Disabled	After interrupt positioning is completed, the servo drive directly responds to other position references.
1	Enabled	After interrupt positioning is completed, the servo drive does not directly respond to other position references. After you enable the DI function 29 (FunIN.29: XintFree, unlock interrupt positioning), the servo drive can respond to other position references.

Note:

Set H05-29 to 1 normally, which helps to prevent motor malfunction due to input of interference position reference after interrupt positioning is completed.

H05-30	Name	Homing selection			Setting Condition	During operation	Related Mode	P
	Value Range	0 to 6	Unit	-	Effective Time	Immediate-ly	Default	0

Defines the homing mode and the trigger signal source.

Value	Signal Source	Description	
		Homing Mode	Signal Source
0	Disabled	The homing function is disabled.	
1	Homing enabled through HomingStart signal input from DI	Homing	DI function FunIN.32 (HomingStart, homing enable)
2	Electrical homing enabled through HomingStart signal input from DI	Electrical homing	DI function FunIN.32 (HomingStart, homing enable)
3	Homing started immediately upon power-on	Homing	S-ON signal active for the first time after power-on again in the position mode
4	Homing started immediately	Homing	S-ON signal active in the position mode After homing, set H05-30 to 0.
5	Electrical homing started	Electrical homing	S-ON signal active in the position mode After homing, set H05-30 to 0.
6	Current position as home	Homing	Not required After homing, set H05-30 to 0.

For usage of homing, see *"5.2.7 Interrupt Positioning"*.

H05-31	Name	Homing mode			Setting Condition	At stop	Related Mode	P
	Value Range	0 to 13	Unit	-	Effective Time	Immediate-ly	Default	0

Defines the default motor direction of rotation, deceleration point, and home during homing.

Value	Homing Mode			Description
	Homing Direction	Deceleration Point	Home	
0	Forward	Home switch	Home switch	Forward/Reverse: consistent with the setting of H02-02 (Rotation direction). Home switch: DI function FunIN.31 (HomeSwitch) Positive limit switch: DI function FunIN.14 (P-OT) Negative limit switch: DI function FunIN.15 (N-OT)
1	Reverse	Home switch	Home switch	
2	Forward	Motor Z signal	Motor Z signal	
3	Reverse	Motor Z signal	Motor Z signal	
4	Forward	Home switch	Motor Z signal	
5	Reverse	Home switch	Motor Z signal	
6	Forward	Positive limit switch	Positive limit switch	
7	Reverse	Negative limit switch	Negative limit switch	
8	Forward	Positive limit switch	Motor Z signal	
9	Reverse	Negative limit switch	Motor Z signal	
10	Forward	Mechanical final limit position	Mechanical final limit position	
11	Reverse	Mechanical final limit position	Mechanical final limit position	
12	Forward	Mechanical final limit position	Motor Z signal	
13	Reverse	Mechanical final limit position	Motor Z signal	

H05-32	Name	Speed of high-speed homing			Setting Condition	During operation	Related Mode	P
	Value Range	0 to 3000	Unit	RPM	Effective Time	Immediate-ly	Default	100

Defines the motor speed at searching for the deceleration point signal when H05-30 is set to 1, 3, or 4.

It sets the maximum motor speed when H05-30 is set to 2 or 5.

A too small speed will cause too long time on searching for the home switch signal. In this case, Er.601 (Homing time-out) will occur.

H05-33	Name	Speed of low-speed homing			Setting Condition	During operation	Related Mode	P
	Value Range	0 to 1000	Unit	RPM	Effective Time	Immediate-ly	Default	10

Defines the motor speed at searching for the home point signal when H05-30 is set to 1, 3, or 4.

If the motor has been close to the home switch, it will immediately search for the home at a low speed set in H05-33 once the homing function is enabled.

H05-33 must be set to a value low enough to prevent mechanical impact at stop.

H05-34	Name	Acceleration/Deceleration time during homing			Setting Condition	At stop	Related Mode	P
	Value Range	0 to 1000	Unit	ms	Effective Time	Immediate-ly	Default	1000

Defines the time for the motor to accelerate from 0 RPM to 1000 RPM or decelerate from 1000 RPM to 0 RPM when H05-30 is set to 1, 2, 3, 4, or 5.

The actual motor acceleration time t during homing is:

$$t = \frac{H05\text{-}32}{1000} \times (H05\text{-}34)$$

H05-35	Name	Duration limit of homing			Setting Condition	At stop	Related Mode	P
	Value Range	0 to 65535	Unit	ms	Effective Time	Immediate-ly	Default	10000

Defines the maximum homing time.

When H05-35 is set to a too small value or the home is not found within the time set in H05-35, Er.601 (Homing time-out) will occur.

H05-36	Name	Offset of mechanical home			Setting Condition	At stop	Related Mode	P
	Value Range	–1073741824 to +1073741824	Unit	Reference unit	Effective Time	Immediate-ly	Default	0

Defines the absolute position value (H0B-07) of the motor after homing.

It sets the position relationship between mechanical home and mechanical zero according to the setting of H05-40.

It sets the displacement from the target position from the mechanical home when electrical homing is enabled.

H05-38	Name	Servo pulse output source			Setting Condition	At stop	Related Mode	P
	Value Range	0 to 2	Unit	-	Effective Time	Next pow-er-on	Default	0

Defines the output source of the pulse output terminal.

In the fully closed-loop control mode, the frequency-division output function cannot be used, and the frequency-division output terminal is used as the input terminal of external optical scale signal.

Value	Output Source	Description
0	Encoder frequency-division output	The encoder feedback signal is output after being divided based on the setting of H05-17 during motor rotation. The encoder frequency-division output mode is recommended when the host computer is used for closed-loop feedback.
1	Pulse reference synchronous output	The input pulse is synchronously output only when H05-00 is set to 0. When pulses of multi-axis servo are synchronously tracked, pulse reference synchronous output is recommended.
2	Frequency division or synchronous output inhibited	The pulse output terminal has no output. In this case, the frequency-division output terminal is used as the input terminal of external optical scale signal.

Pulse output terminals:

Signal	Output Mode	Output Terminal	Max. Pulse Frequency
Phase A signal	Differential output	PAO+, PAO–	2 Mpps
Phase B signal	Differential output	PBO+, PBO–	2 Mpps
Phase Z signal	Differential output	PZO+, PZO–	2 Mpps
	Open collector output	PZ-OUT, GND	100 kpps

The signal width of phase A/B pulses is determined by the motor speed. The signal width of phase Z pulses is half of that of phase A/B pulses.

The output polarity of phase Z signal is determined by the setting of H05-41 (Z pulse output polarity).

H05-39	Name	Electronic gear ratio switchover condition			Setting Condition	At stop	Related Mode	P
	Value Range	0 to 1	Unit	-	Effective Time	Immediately	Default	0

Defines the electronic gear ratio switchover condition.

Value	Switchover Condition	Description
0	Switchover after position reference (reference unit) is kept 0 for 2.5 ms	Allocate a DI terminal with the DI function 24 (FunIN.24: GEAR_SEL, electronic gear ratio switchover).
1	Switchover in real time	

It is valid when H05-02 (Pulses per revolution) is set to 0.

H05-40	Name	Mechanical home offset and action upon active limit signal			Setting Condition	At stop	Related Mode	P
	Value Range	0 to 3	Unit	-	Effective Time	Immediately	Default	0

Defines the offset relationship between the mechanical home and mechanical zero, as well as the action upon overtravel during homing.

Value	Mechanical Home Offset and Action upon Active Limit Signal	Description	
		Mechanical home	Action upon Active Limit Signal
0	H05-36 as coordinate after homing, triggering homing again in the reverse direction after reaching the limit switch	The mechanical home is different from the mechanical zero. After homing is completed, the motor stops at the mechanical home, and the mechanical home coordinate is forced to H05-36.	After the homing enable signal is sent again, the servo drive performs homing in the reverse direction.
1	H05-36 as relative offset after homing, triggering homing again in the reverse direction after reaching the limit switch	The mechanical home is the same as the mechanical zero. After positioning the mechanical home, the motor continues to move according to the setting of H05-36 and then stops.	After the homing enable signal is sent again, the servo drive performs homing in the reverse direction.
2	H05-36 as coordinate after homing, reverse homing applied automatically upon active limit signal	The mechanical home is different from the mechanical zero. After homing is completed, the motor stops at the mechanical home, and the mechanical home coordinate is forced to H05-36.	The servo drive automatically continuous to perform homing in the reverse direction.
3	H05-36 as relative offset after homing, reverse homing applied automatically upon active limit signal	The mechanical home is the same as the mechanical zero. After positioning the mechanical home, the motor continues to move according to the setting of H05-36 and then stops.	The servo drive automatically continuous to perform homing in the reverse direction.

After the homing operation is completed (including homing and electrical homing), the absolute motor position (H0B-07) is the same as the mechanical home offset (H05-36).

The homing completed signal (FunOUT.16: HomeAttain) or electrical homing completed signal (FunOUT.17: ElecHomeAttain) is output only after H0B-07 is equal to H05-36, and is irrelevant to the status of the S-ON signal.

For the homing triggering signal, see *"5.2.7 Interrupt Positioning"*.

H05-41	Name	Z pulse output polarity			Setting Condition	At stop	Related Mode	P
	Value Range	0 to 1	Unit	-	Effective Time	Next pow-er-on	Default	1

Defines the output level when the Z pulse of pulse output terminal is active.

H02-03 (Output pulse phase)	H05-41 (Z pulse output polarity)	Pulse Output Diagram of Forward RUN	Pulse Output Diagram of Reverse RUN
0	0	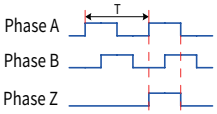 Phase A leads phase B by 90° .	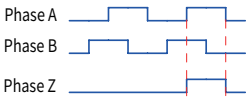 Phase B leads phase A by 90° .
	1	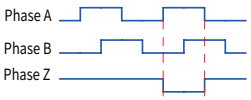 Phase A leads phase B by 90° .	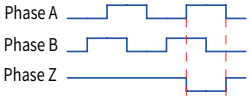 Phase B leads phase A by 90° .
1	0	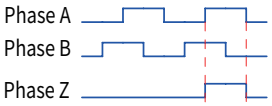 Phase B leads phase A by 90° .	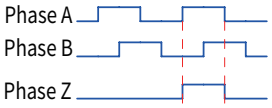 Phase A leads phase B by 90° .
	1	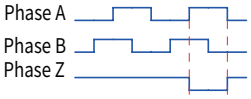 Phase B leads phase A by 90° .	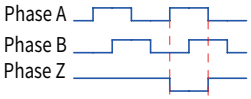 Phase A leads phase B by 90° .

It is recommended to use the active edge outputted by Z signal when a high precision frequency-division output of Z signal is required.

Value	Z Pulse Output Polarity
0	Positive (high level upon active Z pulse)
1	Negative (low level upon active Z pulse)

When H05-41 is 0, the effective change edge is falling edge.

When H05-41 is 1, the effective change edge is rising edge.

H05-43	Name	Position pulse edge			Setting Condition	During operation	Related Mode	PST
	Value Range	0 to 1	Unit	-	Effective Time	Next pow-er-on	Default	0

Defines the valid edge of pulse reference. When it is set to 0, the falling edge of the pulse is valid. When it is set to 1, the rising edge of the pulse is valid.

Value	Position Pulse Edge
0	Falling edge valid
1	Rising edge valid

H05-46	Name	Position offset in absolute position linear mode (low 32 bits)			Setting Condition	At stop	Related Mode	PST
	Value Range	–2147483648 to +2147483647	Unit	Encoder unit	Effective Time	Next power-on	Default	0
H05-48	Name	Position offset in absolute position linear mode (high 32 bits)			Setting Condition	At stop	Related Mode	PST
	Value Range	–2147483648 to +2147483647	Unit	Encoder unit	Effective Time	Next power-on	Default	0
In the absolute position linear mode (H02-01 set to 1), the position offset is the difference between absolute position of current encoder and the mechanical position (encoder unit).								

H05-50	Name	Mechanical gear ratio in absolute position rotation mode (numerator)			Setting Condition	At stop	Related Mode	PST
	Value Range	1 to 65535	Unit	1	Effective Time	Next power-on	Default	65535
H05-51	Name	Mechanical gear ratio in absolute position rotation mode (denominator)			Setting Condition	At stop	Related Mode	PST
	Value Range	1 to 65535	Unit	1	Effective Time	Next power-on	Default	1
Defines the transmission ratio between the mechanical rotary load and the motor in the absolute position rotation mode (H02-01 set to 2).								

H05-52	Name	Pulses per load revolution in absolute position rotation mode (low 32 bits)			Setting Condition	At stop	Related Mode	PST
	Value Range	0 to 4294967295	Unit	Encoder unit	Effective Time	Next power-on	Default	0

H05-54	Name	Pulses per load revolution in absolute position rotation mode (high 32 bits)			Setting Condition	At stop	Related Mode	PST
	Value Range	0 to 127	Unit	Encoder unit	Effective Time	Next power-on	Default	0
Defines the number of pulses per revolution of the rotary load in the absolute position rotation mode (H02-01 set to 2).								

H05-56	Name	Speed threshold of homing upon hit-and-stop			Setting Condition	During operation	Related Mode	P
	Value Range	0 to 1000	Unit	RPM	Effective Time	Immediately	Default	2
Defines the speed threshold for judging whether the load reaches the mechanical position during homing upon hit-and-stop.								

H05-58	Name	Torque limit of homing upon hit-and-stop			Setting Condition	During operation	Related Mode	P
	Value Range	0 to 300.0	Unit	%	Effective Time	Immediately	Default	100.0
Defines the maximum positive/negative torque limit during homing upon hit-and-stop.								

H05-59	Name	Window time of positioning completed			Setting Condition	During operation	Related Mode	P
	Value Range	0 to 30000	Unit	ms	Effective Time	Immediate-ly	Default	0
When the position deviation remains smaller than the threshold of positioning completed for more than the time set in this parameter, the positioning completed signal can output the valid state.								

H05-60	Name	Holding time of positioning completed			Setting Condition	During operation	Related Mode	P
	Value Range	0 to 30000	Unit	ms	Effective Time	Immediate-ly	Default	0
Defines the valid time of the positioning completed signal (COIN) when H05-20 is set to 3. During the time, the positioning completed signal (COIN) becomes invalid if the position reference is 0. If the setting is 0, the signal remains active until the next reference is received.								

H05-61	Name	Number of encoder frequency-division pulses (32-bit)			Setting Condition	At stop	Related Mode	P
	Value Range	0 to 262143	Unit	P/r	Effective Time	Next pow-er-on	Default	0
When the value is smaller than 35, the number of encoder frequency-division pulses is determined by H05-17. When the value is equal to or larger than 35, the number of encoder frequency-division pulses is determined by H05-61.								

9.2.7 Group H06: Speed Control Parameters

H06-00	Name	Source of main speed reference A			Setting Condition	At stop	Related Mode	S
	Value Range	0 to 2	Unit	-	Effective Time	Immediately	Default	0

Defines the source of main speed reference A.

Value	Reference Source	Description
0	Digital setting	The source of main speed reference A is set by H06-03.
1	AI1	The main speed reference A is input from AI1. Correspondence between voltage input from AI1 and speed reference is determined by parameters H03-50, H03-51, H03-53, H03-54, and H03-80.
2	AI2	The main speed reference A is input from AI2. Correspondence between voltage input from AI2 and speed reference is determined by parameters H03-55, H03-56, H03-58, H03-59, and H03-80. For details, see Section 6.3.1.

◆ Note:
Digital setting is internal speed reference. AI1 and AI2 are external speed reference sources. For details about AI1 and AI2 terminals, see *"Chapter 3 Wiring"*.

H06-01	Name	Source of auxiliary speed reference B			Setting Condition	At stop	Related Mode	S
	Value Range	0 to 5	Unit	-	Effective Time	Immediately	Default	1

Defines the source of auxiliary speed reference B.

Value	Reference Source	Description
0	Digital setting	The source of auxiliary speed reference B is set by H06-03.
1	AI1	The auxiliary speed reference B is input from AI1. Correspondence between voltage input from AI1 and speed reference is determined by parameters H03-50, H03-51, H03-53, H03-54, and H03-80.
2	AI2	The auxiliary speed reference B is input from AI2. Correspondence between voltage input from AI2 and speed reference is determined by parameters H03-55, H03-56, H03-58, H03-59, and H03-80.
3	-	Inactive
4	-	Inactive
5	Multi-speed reference	The source of auxiliary speed reference B is determined by internal multi-speed references. For settings of multi-speed parameters, see parameters in group H12.

◆ Note:
Digital setting and multi-speed references are internal speed references. AI1 and AI2 are external speed reference sources. For details about AI1 and AI2 terminals, see *"Chapter 3 Wiring"*.

H06-02	Name	Speed reference source			Setting Condition	At stop	Related Mode	S
	Value Range	0 to 4	Unit	-	Effective Time	Immediately	Default	0

Defines the speed reference source.

Value	Control Mode	Description
0	Source of main speed reference A	The reference source is defined by H06-00.
1	Source of auxiliary speed reference B	The reference source is defined by H06-01.
2	A + B	The reference source is the product of A + B (H06-00 + H06-01).
3	Switched between A and B	The reference source is switched between A and B as defined by FunIN.4 (Cmd_SEL).
4	Communication	The speed reference is defined by operating on H31-09 through communication (unit: 0.001 RPM).

State of FunIN.4 (Cmd_ SEL)	Reference Source
Inactive	Source of main speed reference A
Active	Source of auxiliary speed reference B

H06-03	Name	Speed reference value set through key-pad			Setting Condition	During operation	Related Mode	S
	Value Range	–6000 to +6000	Unit	RPM	Effective Time	Immediate-ly	Default	200

It defines the speed reference when H06-00 or H06-01 is set to 1 (Digital setting).

H06-04	Name	Jog speed reference value			Setting Condition	During operation	Related Mode	PST
	Value Range	0 to 6000	Unit	RPM	Effective Time	Immediate-ly	Default	100

Defines the jog speed reference when the DI jog function is enabled.

The DI jog function can be enabled in normal drive running status. It is irrelevant to the control mode.

H06-05	Name	Acceleration ramp time constant of speed reference			Setting Condition	During operation	Related Mode	S
	Value Range	0 to 65535	Unit	ms	Effective Time	Immediate-ly	Default	0

H06-06	Name	Deceleration ramp time constant of speed reference			Setting Condition	During operation	Related Mode	S
	Value Range	0 to 65535	Unit	ms	Effective Time	Immediate-ly	Default	0

Defines the acceleration/deceleration ramp time constant of speed references. The acceleration/ deceleration time constant of multi-speed references are defined only by parameters in group H12.

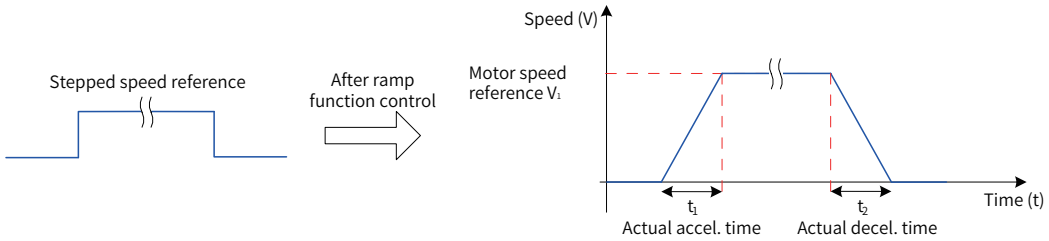

H06-05 defines the time for the speed reference to accelerate from 0 RPM to 1000 RPM.

H06-06 defines the time for the speed reference to decelerate from 1000 RPM to 0 RPM.

The formulas for calculating the actual acceleration/deceleration time are as follows:

$$\text{Actual accel. time } t_1 = \frac{\text{Speed reference}}{1000} \times \text{Acceleration ramp time of speed reference}$$

$$\text{Actual decel. time } t_2 = \frac{\text{Speed reference}}{1000} \times \text{Deceleration ramp time of speed reference}$$

H06-07	Name	Max. speed limit			Setting Condition	During operation	Related Mode	S
	Value Range	0 to 6000	Unit	RPM	Effective Time	Immediate-ly	Default	6000

H06-08	Name	Positive speed limit			Setting Condition	During operation	Related Mode	S
	Value Range	0 to 6000	Unit	RPM	Effective Time	Immediate-ly	Default	6000

H06-09	Name	Negative speed limit			Setting Condition	During operation	Related Mode	S
	Value Range	0 to 6000	Unit	RPM	Effective Time	Immediate-ly	Default	6000

Defines the speed reference limit in the speed control mode. The speed reference limit sources are as follows:

H06-07 specifies both the positive and negative limits of speed references. If speed references exceed the setting of H06-07, the speed references will be limited as this value.

H06-08 specifies the positive speed limit. If the positive speed reference exceeds the setting of H06-08, the reference will be limited as this value.

H06-09 specifies the negative speed limit. If the negative speed reference exceeds the setting of H06-09, the reference will be limited as this value.

The maximum motor speed (the default limit) varies with the actual motor model.

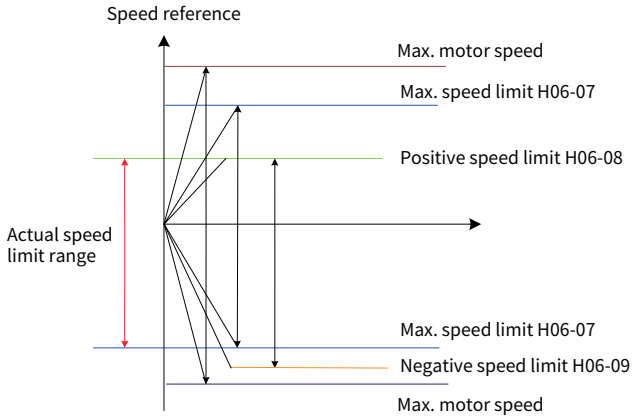

Therefore, the motor speed reference in the positive/negative direction is limited as below:

|Positive speed limit| ⩽ min {maximum motor speed, H06-07, H06-08}

|Negative speed limit| ⩽ min {maximum motor speed, H06-07, H06-09}

H06-11	Name	Torque feedforward control			Setting Condition	During operation	Related Mode	PS
	Value Range	0 to 1	Unit	-	Effective Time	Immediate-ly	Default	1

Defines whether to enable the internal torque feedforward function in a non-torque control mode.

The torque feedforward function can improve the torque reference responsivity and reduce the position deviation during operation at constant acceleration/deceleration rate.

Value	Torque Feedforward Control	Description
0	No torque feedforward	-
1	Internal torque feedforward	The torque feedforward signal source is speed reference. From output of position controller in the position mode. From user speed reference in the speed mode.

Parameters of torque feedforward include H08-20 (Torque feedforward gain) and H08-21 (Torque feedforward filter time constant). For details, see *"6.4.4 Feedforward Gain"*.

In a non-torque control mode, the control block diagram of torque feedforward is as follows:

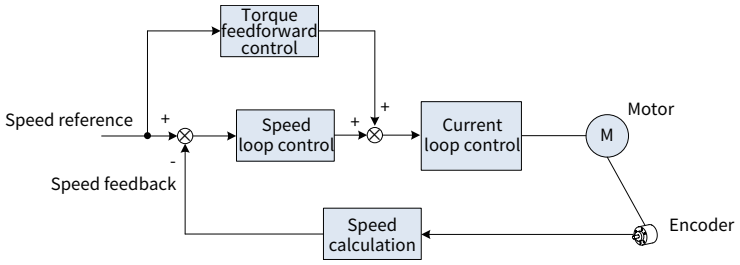

H06-15	Name	Zero clamp speed threshold			Setting Condition	During operation	Related Mode	S
	Value Range	0 to 6000	Unit	RPM	Effective Time	Immediate-ly	Default	10

In the speed control mode, if DI function FunIN.12 (ZCLAMP) is enabled, and the speed reference amplitude is smaller than or equal to the value of H06-15, the servo motor enters the zero clamp state. At this moment, a position loop is built inside the servo drive and the speed reference is invalid. The servo motor is clamped with ±1 pulse of the position at which zero clamp becomes valid. Even if the motor rotates due to external force, it will return to the zero position and be clamped.

When the speed reference amplitude is larger than the value of H06-15, the servo motor exits the zero clamp state and continues running according to the input speed reference.

If the signal of the DI terminal with FunIN.12 (ZCLAMP) is inactive, the zero clamp function is disabled.

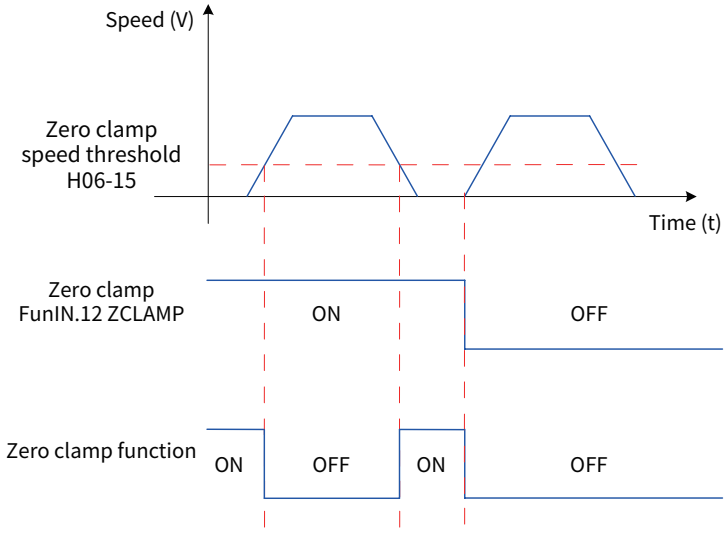

H06-16	Name	Motor speed threshold			Setting Condition	During operation	Related Mode	S
	Value Range	0 to 1000	Unit	RPM	Effective Time	Immediate-ly	Default	20

When the absolute value of the actual motor speed after filter reaches the setting of H06-16 (Motor speed threshold), the motor can be considered to rotate. At this moment, the servo drive outputs the motor rotation signal (FunOUT.2: TGON) to confirm that the motor has rotated. When the absolute value of the actual motor speed after filter is smaller than the setting of H06-16, the motor is considered not to rotate.

Judgment on the motor rotation signal (FunOUT.2: TGON) is not influenced by the servo drive running status and control mode.

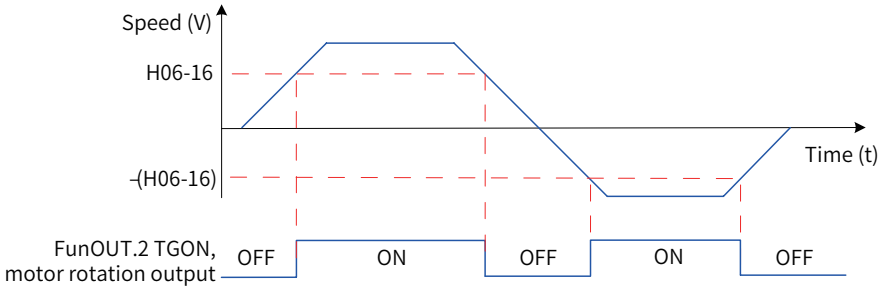

◆ Note:

In the preceding figure, ON indicates that the motor rotation DO signal is active, and OFF indicates that the motor rotation DO signal is inactive.

The filter time constant of motor speed can be set in H0A-27 (Speed DO filter time constant).

H06-17	Name	Threshold of speed matching signal			Setting Condition	During operation	Related Mode	S
	Value Range	0 to 100	Unit	RPM	Effective Time	Immediate-ly	Default	10

In the speed control mode, when the absolute value of the difference between the motor speed after filter and the speed reference satisfies the setting of H06-17, the actual motor speed is considered to reach the speed reference. At this moment, the servo drive outputs the speed matching signal (FunOUT.4: V-Cmp). When the absolute value of the difference between the motor speed after filter and the speed reference exceeds the setting of H06-17, the speed matching signal is inactive.

If the servo drive is not in running status or in the speed control mode, the speed matching signal (FunOUT.4: V-Cmp) is always inactive.

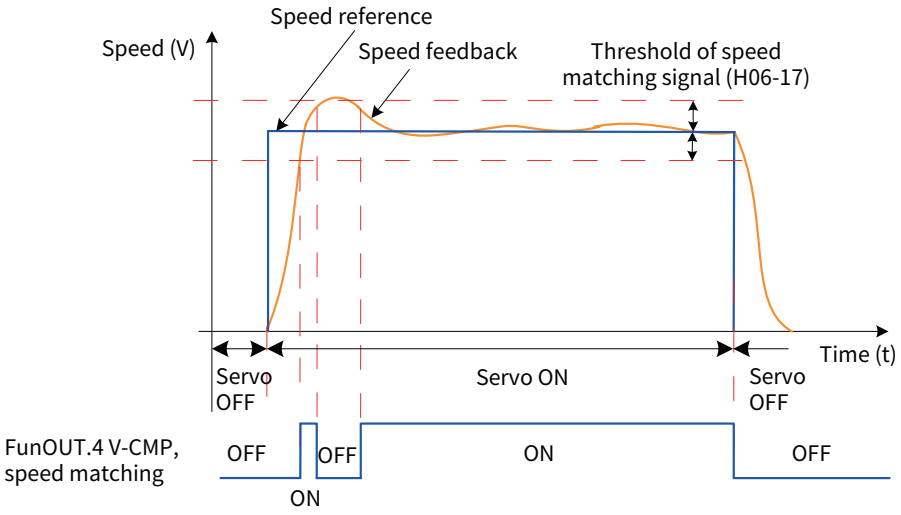

◆ Note:

In the preceding figure, ON indicates that the speed matching DO signal is active, and OFF indicates that the speed matching DO signal is inactive.

The filter time constant of motor speed can be set in H0A-27 (Speed DO filter time constant).

H06-18	Name	Threshold of speed reached signal			Setting Condition	During operation	Related Mode	S
	Value Range	10 to 6000	Unit	RPM	Effective Time	Immediate-ly	Default	1000

When the absolute value of the motor speed after filter is greater than the setting of H06-18, the actual motor speed is considered to reach the desired value. At this moment, the servo drive outputs the speed reached signal (FunOUT.19: V-Arr). When the absolute value of the motor speed after filter is smaller than or equal to the setting of H06-18, the speed reached signal is inactive.

Judgment on the speed reached signal (FunOUT.19: V-Arr) is not influenced by the servo drive running status and control mode.

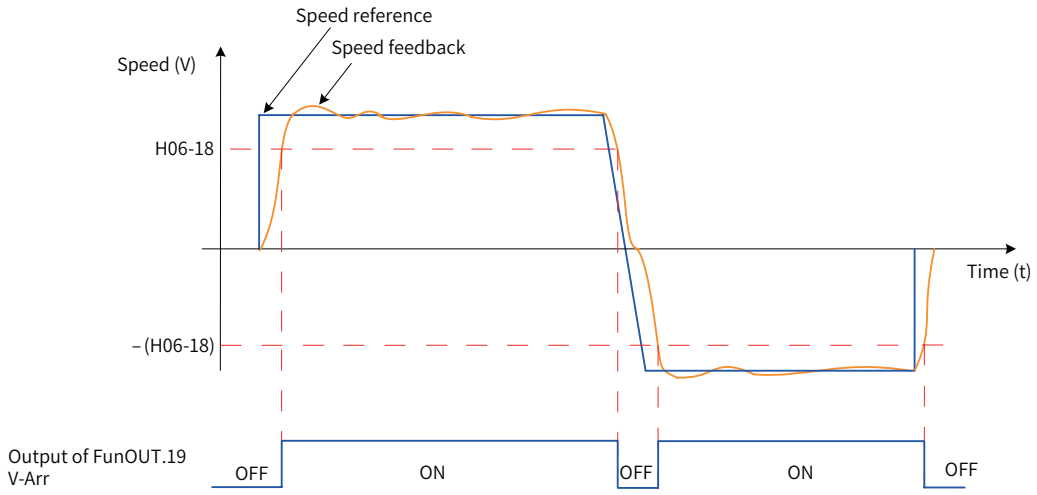

◆ Note:

In the preceding figure, ON indicates that the speed reached DO signal is active, and OFF indicates that the speed reached DO signal is inactive.

The filter time constant of motor speed can be set in H0A-27 (Speed DO filter time constant).

H06-19	Name	Threshold of zero speed output signal			Setting Condition	During operation	Related Mode	S
	Value Range	1 to 6000	Unit	RPM	Effective Time	Immediate-ly	Default	10

When the absolute value of the motor speed after filter is smaller than the setting of H06-19, the actual motor speed is considered to close to 0. At this moment, the servo drive outputs the zero speed signal (FunOUT.3: V-Zero). When the absolute value of the motor speed after filter is greater than or equal to the setting of H06-19, the zero speed signal is inactive.

Judgment on the zero speed signal (FunOUT.3: V-Zero) is not influenced by the servo drive running status and control mode.

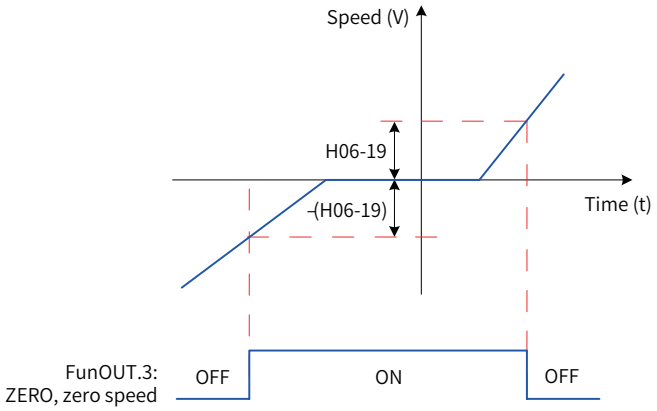

◆ Note:

In the preceding figure, ON indicates that the zero speed DO signal is active, and OFF indicates that the zero speed DO signal is inactive.

The filter time constant of motor speed can be set in H0A-27 (Speed DO filter time constant).

9.2.8 Group H07: Torque Control Parameters

H07-00	Name	Source of main torque reference A			Setting Condition	At stop	Related Mode	T
	Value Range	0 to 2	Unit	-	Effective Time	Immediately	Default	0

Defines the source of main torque reference A.

Value	Reference Source	Description
0	Digital setting	The source of main torque reference A is set by H07-03.
1	AI1	The main torque reference A is input from AI1. Correspondence between voltage input from AI1 and speed reference is determined by parameters H03-50, H03-51, H03-53, H03-54, and H03-81.
2	AI2	The main torque reference A is input from AI2. Correspondence between voltage input from AI2 and speed reference is determined by parameters H03-55, H03-56, H03-58, H03-59, and H03-81.

◆ Note:
Digital setting is internal torque reference. AI1 and AI2 are external torque reference sources. For details about AI1 and AI2 terminals, see *"Chapter 3 Wiring"*.

H07-01	Name	Source of auxiliary torque reference B			Setting Condition	At stop	Related Mode	T
	Value Range	0 to 2	Unit	-	Effective Time	Immediately	Default	1

Defines the source of auxiliary torque reference B.

Value	Reference Source	Description
0	Digital setting	The source of auxiliary torque reference B is set by H07-03.
1	AI1	The auxiliary torque reference B is input from AI1. Correspondence between voltage input from AI1 and speed reference is determined by parameters H03-50, H03-51, H03-53, H03-54, and H03-81. For details, see Section 6.4.1.
2	AI2	The auxiliary torque reference B is input from AI2. Correspondence between voltage input from AI2 and speed reference is determined by parameters H03-55, H03-56, H03-58, H03-59, and H03-81. For details, see Section 6.4.1.

◆ Note:
Digital setting is internal torque reference. AI1 and AI2 are external torque reference sources. For details about AI1 and AI2 terminals, see *"Chapter 3 Wiring"*.

H07-02	Name	Torque reference source			Setting Condition	At stop	Related Mode	T
	Value Range	0 to 3	Unit	-	Effective Time	Immediate-ly	Default	0

Selects the torque reference source.

Value	Control Mode	Description
0	Source of main torque reference A	The reference source is defined by H07-00.
1	Source of auxiliary torque reference B	The reference source is defined by H07-01.
2	A + B	The reference source is the product of A + B (H07-00 + H07-01).
3	Switched between A and B	The reference source is switched between A and B as defined by FunIN.4 (Cmd_SEL). State of FunIN.4 (Cmd_ SEL): Inactive → Source of main torque reference A State of FunIN.4 (Cmd_ SEL): Active → Source of auxiliary torque reference B
4	Communication	The torque reference is defined by operating on H31-11 through communication.

H07-03	Name	Torque reference set through keypad			Setting Condition	During operation	Related Mode	T
	Value Range	–300.0 to +300.0	Unit	%	Effective Time	Immediate-ly	Default	0

Defines the torque reference when H07-00 or H07-01 is set to 1 (Digital setting.)

The setpoint 100.0% corresponds to the rated torque of the motor.

H07-05	Name	Torque reference filter time constant			Setting Condition	During operation	Related Mode	PST
	Value Range	0 to 30.00	Unit	ms	Effective Time	Immediate-ly	Default	0.79

H07-06	Name	2nd torque reference filter time constant			Setting Condition	During operation	Related Mode	PST
	Value Range	0 to 30.00	Unit	ms	Effective Time	Immediate-ly	Default	0.79

Defines the torque reference filter time constant.

Low-pass filter of torque reference helps to smoothen the torque reference and reduce vibration.

A very large filter time constant reduces the responsivity. Check the responsivity during the setting.

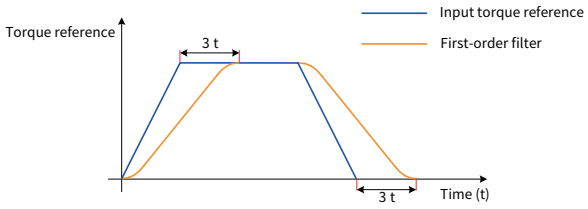

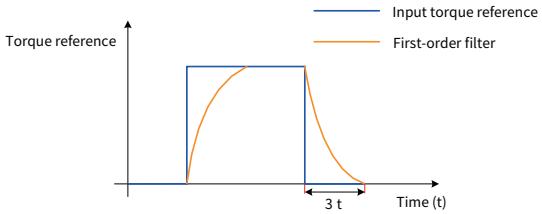

◆ Note:

The servo drive provides two low-pass filters for torque references. By default, the 1st filter is used.

In the position or speed control mode, gain switchover can be used. Once certain conditions are met, the drive switches to the 2nd filter. For details about gain switchover, see *"6.4.2 Gain Switchover"*.

H07-07	Name	Torque limit source			Setting Condition	At stop	Related Mode	PST
	Value Range	0 to 4	Unit	-	Effective Time	Immediate-ly	Default	0

Defines the torque limit source. For details, see *"5.4.3 Torque Reference Limit"*.

Value	Limit Source
0	Forward/Reverse internal torque limit
1	Forward/Reverse external torque limit (selected through P-CL and N-CL)
2	T-LMT as external torque limit
3	Smaller of forward/reverse external torque limit and T-LMT as external torque limit (selected through P-CL and N-CL)
4	Switchover between forward/reverse internal torque limit and T-LMT torque limit (selected through P-CL and N-CL)

◆ Note:
Torque limit is valid for position control, speed control, torque control, and hybrid control.

H07-08	Name	T-LMT selection			Setting Condition	At stop	Related Mode	PST
	Value Range	1 to 2	Unit	-	Effective Time	Immediate-ly	Default	2

Selects the analog input channel of the torque limit when H07-07 is set to 2, 3, or 4.

Value	Reference Source	Description
1	AI1	AI1 used as the external torque limit input source
2	AI2	AI2 used as the external torque limit input source

For settings of AI, see *"5.4.1 Torque Reference Input Setting"*. For the final torque limit, see *"5.4.3 Torque Reference Limit"*.

H07-09	Name	Forward internal torque limit			Setting Condition	During operation	Related Mode	PST
	Value Range	0.0 to 300.0	Unit	%	Effective Time	Immediate-ly	Default	300.0

H07-10	Name	Reverse internal torque limit			Setting Condition	During operation	Related Mode	PST
	Value Range	0.0 to 300.0	Unit	%	Effective Time	Immediate-ly	Default	300.0

Defines the forward/reverse internal torque limit when H07-07 is set to 0 or 4. The setpoint 100.0% corresponds to the rated torque of the motor.

◆ Note:
1. If the value of H07-09 and H07-10 is too small, insufficient torque may occur during acceleration/deceleration of the servo motor.
2. If the setpoint exceeds the maximum torque of the servo motor and servo drive, the actual torque is limited to the maximum torque of the servo motor and servo drive.
3. For the final torque limit, see *"5.4.3 Torque Reference Limit"*.

H07-11	Name	Forward external torque limit			Setting Condition	During operation	Related Mode	PST
	Value Range	0.0 to 300.0	Unit	%	Effective Time	Immediate-ly	Default	300.0

H07-12	Name	Reverse external torque limit			Setting Condition	During operation	Related Mode	PST
	Value Range	0.0 to 300.0	Unit	%	Effective Time	Immediate-ly	Default	300.0

Defines the forward/reverse external torque limit when H07-07 is set to 1 or 3. The setpoint 100.0% corresponds to the rated torque of the motor. For the final torque limit, see *"5.4.3 Torque Reference Limit"*.

H07-17	Name	Speed limit source			Setting Condition	During operation	Related Mode	T
	Value Range	0 to 2	Unit	-	Effective Time	Immediate-ly	Default	0

Defines the speed limit source in the torque control mode.
After the speed limit is set, the actual motor speed is restricted to be within the speed limit. After the motor speed reaches the speed limit, the motor keeps running at this limit constantly.

Value	Limit Source	Description
0	Internal speed limit	The speed limit is determined by H07-19 and H07-20.
1	V-LMT as external speed limit	The speed limit value in different directions is determined by the smaller of the speed corresponding to the voltage input from AI and H07-19 (Positive speed limit) and H07-20 (Negative speed limit).
2	Speed limit selected through DI	FunIN.36 invalid: H07-19 used as positive/negative speed limit FunIN.36 valid: H07-20 used as positive/negative speed limit

◆ Note:
For details about speed limit in the torque mode, see *"6.4.4 Feedforward Gain"*.

H07-18	Name	V-LMT selection			Setting Condition	During operation	Related Mode	T
	Value Range	1 to 2	Unit	-	Effective Time	Immediate-ly	Default	1

Selects the AI channel when external analog (V-LMT) is used as the speed limit source in the torque mode.

Value	Reference Source	Description
1	AI1	AI1 used as the external speed limit input source
2	AI2	AI2 used as the external speed limit input source

H07-19	Name	Positive speed limit /1st speed limit in torque control			Setting Condition	During operation	Related Mode	T
	Value Range	0 to 6000	Unit	RPM	Effective Time	Immediate-ly	Default	3000

H07-20	Name	Negative speed limit /2nd speed limit in torque control			Setting Condition	During operation	Related Mode	T
	Value Range	0 to 6000	Unit	RPM	Effective Time	Immediate-ly	Default	3000

Defines the speed limit set through digital setting in the torque mode. For details, see *"6.4.4 Feedforward Gain"*.

H07-21	Name	Base value for torque reached			Setting Condition	During operation	Related Mode	PST
	Value Range	0.0 to 300.0	Unit	%	Effective Time	Immediate-ly	Default	0.0

H07-22	Name	Valid value for torque reached			Setting Condition	During operation	Related Mode	PST
	Value Range	0.0 to 300.0	Unit	%	Effective Time	Immediate-ly	Default	20.0

H07-23	Name	Invalid value for torque reached			Setting Condition	During operation	Related Mode	PST
	Value Range	0.0 to 300.0	Unit	%	Effective Time	Immediate-ly	Default	10.0

The torque reached function (FunOUT.18: ToqReach) is used to judge whether the actual torque reference reaches the range of the valid value for torque reached. If yes, the servo drive outputs the corresponding DO signal to the host controller.

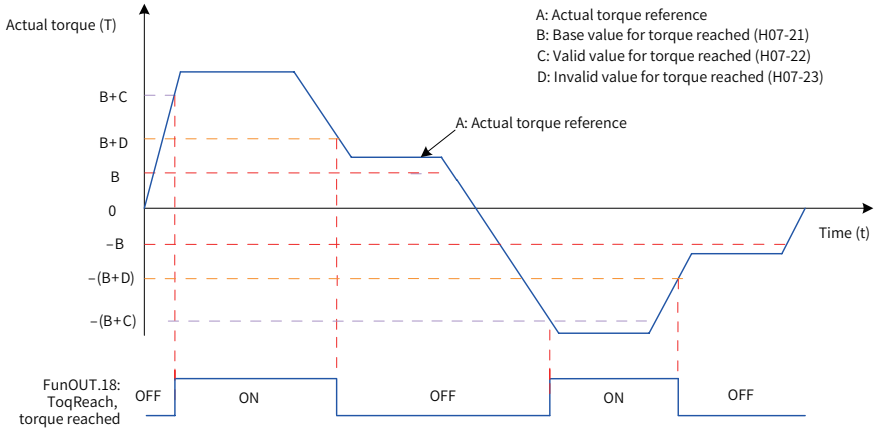

A: Actual torque reference (H0B-02)

B: Base value for torque reached (H07-21)

C: Valid value for torque reached (H07-22)

D: Invalid value for torque reached (H07-23)

C and D are offsets on the basis of B.

The torque reached DO signal becomes active when the actual torque reference meets the condition:

$$|A| \geqslant B + C$$

Otherwise, the torque reached DO signal remains inactive.

The torque reached DO signal becomes inactive when the actual torque reference meets the condition:

$$|A| < B + D$$

Otherwise, the torque reached DO signal remains active.

H07-40	Name	Speed limit window in torque control			Setting Condition	During operation	Related Mode	T
	Value Range	0.5 to 30.0	Unit	ms	Effective Time	Immediate-ly	Default	1.0

In the torque mode, when absolute value of the actual motor speed (see *"5.4.4 Speed Limit in Torque Control"*) exceeds the speed limit for the time of H07-40, the servo drive regards that the motor speed is limited and outputs the speed limit signal (FunOUT.8: V-LT) to the host controller. If any of the conditions is not met, the speed limit signal is inactive.

The speed limit signal (FunOUT.8: V-LT) is judged only in the torque control mode and servo running status.

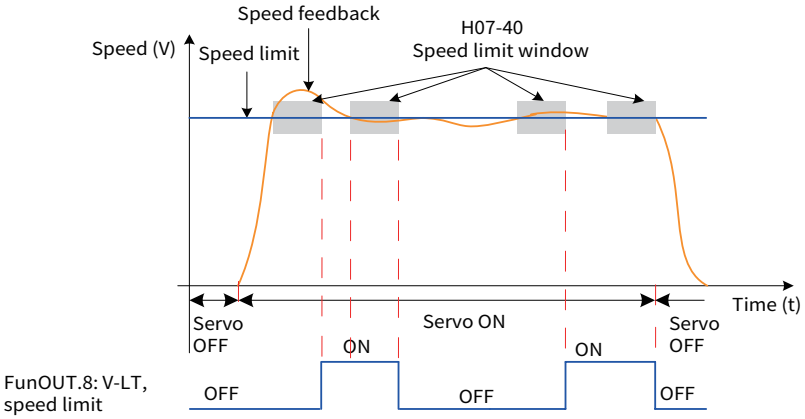

■ Note:

In the preceding figure, ON indicates that the speed limit DO signal is active, and OFF indicates that the speed limit DO signal is inactive.

9.2.9 Group H08: Gain Parameters

H08-00	Name	Speed loop gain			Setting Condition	During operation	Related Mode	PS
	Value Range	0.1 to 2000.0	Unit	Hz	Effective Time	Immediately	Default	25.0

Defines the speed loop proportional gain.

This parameter determines the responsivity of the speed loop. The higher the setpoint, the faster the speed loop response is. Note that an excessively high setpoint may cause vibration.

In the position control mode, the position loop gain must be increased together with the speed loop gain.

H08-01	Name	Speed loop integral time constant			Setting Condition	During operation	Related Mode	PS
	Value Range	0.15 to 512.00	Unit	ms	Effective Time	Immediately	Default	31.83

Defines the speed loop integral time constant.

The lower the setpoint, the better the integral action, and the quicker will the deviation value be close to 0.

◆ Note:

There is no integral action when H08-01 is set to 512.00.

H08-02	Name	Position loop gain			Setting Condition	During operation	Related Mode	P
	Value Range	0.0 to 2000.0	Unit	Hz	Effective Time	Immediately	Default	40.0

Defines the proportional gain of the position loop.

This parameter determines the responsivity of the position loop. A high setpoint shortens the positioning time. Note that an excessively high setpoint may cause vibration.

H08-00, H08-01, H08-02, and H07-05 (Torque reference filter time constant) are called the 1st gain.

H08-03	Name	2nd speed loop gain			Setting Condition	During operation	Related Mode	PS
	Value Range	0.1 to 2000.0	Unit	Hz	Effective Time	Immediately	Default	40.0

H08-04	Name	2nd speed loop integral time constant			Setting Condition	During operation	Related Mode	PS
	Value Range	0.15 to 512.00	Unit	ms	Effective Time	Immediately	Default	40.00

H08-05	Name	2nd position loop gain			Setting Condition	During operation	Related Mode	P
	Value Range	0.0 to 2000.0	Unit	Hz	Effective Time	Immediately	Default	64.0

Defines the 2nd gain of the position loop and speed loop. H08-03, H08-04, H08-05, and H07-06 (2nd torque reference filter time constant) are called the 2nd gain.

For details about gain switchover, see *"6.4.2 Gain Switchover"*.

H08-08	Name	2nd gain mode setting			Setting Condition	During operation	Related Mode	PST
	Value Range	0 to 1	Unit	-	Effective Time	Immediate-ly	Default	1

Defines the mode for switching to the 2nd gain.

Value	Meaning
0	Fixed at 1st gain. P/PI of the speed loop control is switched over through DI function 3 (FunIN.3: GAIN_SEL, gain switchover). GAIN_SEL invalid: PI control GAIN_SEL valid: P control
1	The 1st gain (H08-00 to H08-02 and H07-05) and the 2nd gain (H08-03 to H08-05, and H07-06) are switched over according to the setting of H08-09.

H08-09	Name	Gain switchover condition			Setting Condi-tion	During opera-tion	Related Mode	PST
	Value Range	0 to 10	Unit	-	Effective Time	Immediately	Default	0

Defines the gain switchover condition.

Value	Gain Switchover Condition	Description
0	Fixed at 1st gain	The 1st gain is always used.
1	Switchover through external DI	The gain is switched over by using the GAIN-SEL signal. GAIN_SEL invalid: 1st gain (H08-00 to H08-02, and H07-05) GAIN_SEL valid: 2nd gain (H08-03 to H08-05, and H07-06) If the GAIN-SEL signal cannot be allocated to a DI terminal, the 1st gain is always used.
2	Large torque reference	When the absolute value of torque reference exceeds (level + dead time, %) in the 1st gain, the drive switches to the 2nd gain. When the absolute value of torque reference is smaller than or equal to (level – dead time, %) and this status lasts within the delay (H08-10) in the 2nd gain, the drive returns to the 1st gain.
3	Large speed reference	When the absolute value of speed reference exceeds (level + dead time, RPM) in the 1st gain, the drive switches to the 2nd gain. When the absolute value of speed reference is smaller than or equal to (level – dead time, RPM) and this status lasts within the delay (H08-10) in the 2nd gain, the drive returns to the 1st gain.
4	Large speed reference change rate	It is valid only in non-speed control modes. When the absolute value of speed reference change rate exceeds (level + dead time, 10 RPM/s) in the 1st gain, the drive switches to the 2nd gain. When the absolute value of speed reference change rate is smaller than or equal to (level – dead time, 10 RPM/s) and this status lasts within the delay (H08-10) in the 2nd gain, the drive returns to the 1st gain. The 1st gain is always used in the speed control mode.
5	High/Low-speed threshold of speed reference	When the absolute value of speed reference exceeds (level – dead time, RPM) in the 1st gain, the drive starts to switch to the 2nd gain and the gain changes gradually. When the absolute value of the speed reference reaches (level + dead time, RPM), the drive completely switches to the 2nd gain. When the absolute value of speed reference is smaller than (level + dead time, RPM) in the 2nd gain, the drive starts to return to the 1st gain and the gain changes gradually. When the absolute value of the speed reference reaches (level – dead time, RPM), the drive completely returns to the 1st gain.
6	Excessive position deviation	It is valid only in the position control mode and fully closed-loop control mode. When the absolute value of position deviation exceeds (level + dead time, encoder unit) in the 1st gain, the drive switches to the 2nd gain. When the absolute value of position deviation is smaller than (level – dead time, encoder unit) and this status lasts within the delay (H08-10) in the 2nd gain, the drive returns to the 1st gain. The 1st gain is always used when the drive is not in the position control mode and fully closed-loop control mode.
7	Position reference available	It is valid only in the position control mode and fully closed-loop control mode. When the position reference is not 0 in the 1st gain, the drive switches to the 2nd gain. When the position reference is 0 and this status lasts within the delay (H08-10) in the 2nd gain, the drive returns to the 1st gain. The 1st gain is always used when the drive is not in the position control mode and fully closed-loop control mode.
8	Positioning completed	It is valid only in the position control mode and fully closed-loop control mode. When positioning is not completed in the 1st gain, the drive switches to the 2nd gain. When positioning is not completed and this status lasts within the delay (H08-10) in the 2nd gain, the drive returns to the 1st gain. The 1st gain is always used when the drive is not in the position control mode and fully closed-loop control mode.
9	Large actual motor speed	It is valid only in the position control mode and fully closed-loop control mode. When the absolute value of actual motor speed exceeds (level + dead time, RPM) in the 1st gain, the drive switches to the 2nd gain. When the absolute value of actual motor speed is smaller than or equal to (level – dead time, RPM) and this status lasts within the delay (H08-10) in the 2nd gain, the drive returns to the 1st gain. The 1st gain is always used when the drive is not in the position control mode and fully closed-loop control mode.

H08-09	Name	Gain switchover condition			Setting Condition	During operation	Related Mode	PST
	Value Range	0 to 10	Unit	-	Effective Time	Immediately	Default	0

Value	Gain Switchover Condition	Description
10	Position reference available + actual speed	It is valid only in the position control mode and fully closed-loop control mode. When the position reference is not 0 in the 1st gain, the drive switches to the 2nd gain. When the position reference is 0 and this status lasts within the delay (H08-10) in the 2nd gain, the drive still uses the 2nd gain. When the position reference is 0 and the delay (H08-10) is reached, if the absolute value of actual motor speed is smaller than (level, RPM), the speed loop integral time constant is fixed to the value of H08-04 (2nd speed loop integral time constant), the drive returns to the 1st gain on the other aspects. If the absolute value of actual motor speed is smaller than (level – dead time, RPM), the speed loop integral time constant returns to the value of H08-01. The 1st gain is always used when the drive is not in the position control mode and fully closed-loop control mode.

H08-10	Name	Gain switchover delay			Setting Condition	During operation	Related Mode	PST
	Value Range	0.0 to 1000.0	Unit	ms	Effective Time	Immediately	Default	5.0
Defines the delay when the drive switches from the 2nd gain set to the 1st gain set.								

H08-11	Name	Gain switchover level			Setting Condition	During operation	Related Mode	PST
	Value Range	0 to 20000	Unit	Based on the switchover condition	Effective Time	Immediately	Default	50
Defines the gain switchover level. Gain switchover is affected by both the level and the dead time, as defined by H08-09. The unit of gain switchover level varies with the switchover condition.								

H08-12	Name	Gain switchover dead time			Setting Condition	During operation	Related Mode	PST
	Value Range	0 to 20000	Unit	Based on the switchover condition	Effective Time	Immediately	Default	30
Defines the dead time for gain switchover. Gain switchover is affected by both the level and the dead time, as defined by H08-09. The unit of gain switchover dead time varies with the switchover condition. ◆ Note: Set H08-11 to be greater than or equal to H08-12. If H08-11 is set to be smaller than H08-12, the servo drive will set H08-11 to be equal to H08-12.								

H08-13	Name	Position gain switchover time			Setting Condition	During operation	Related Mode	P
	Value Range	0.0 to 1000.0	Unit	ms	Effective Time	Immediately	Default	3.0

In the position control mode, if H08-05 (2nd position loop gain) is much larger than H08-02 (Position loop gain), set the time for switching from H08-02 to H08-05.

It can reduce the impact caused by an increase in the position loop gain.

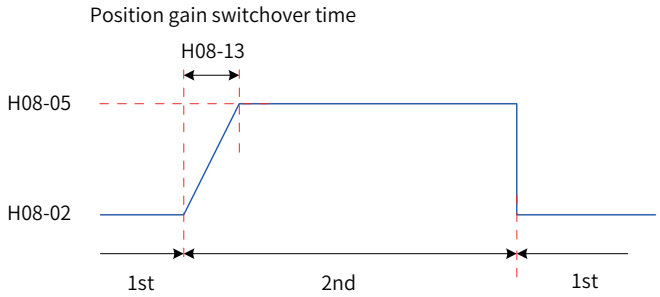

If H08-05 is smaller than or equal to H08-02, this parameter is invalid and the servo drive immediately switches to the 2nd gain.

H08-15	Name	Load moment of inertia ratio			Setting Condition	During operation	Related Mode	PST
	Value Range	0.00 to 120.00	Unit	Multiple	Effective Time	Immediate-ly	Default	1.00

Defines the mechanical load inertia ratio relative to the motor moment of inertia.

$$\text{Load inertia ratio} = \frac{\text{Rotational inertia of mechanical load}}{\text{Motor rotor inertia}}$$

When H08-15 is set to 0, it indicates the motor carries no load; if it is set to 1.00, it indicates the mechanical load inertia is the same as the motor moment of inertia.

When online or offline inertia auto-tuning is used, the servo drive automatically calculates and updates the value of H08-15.

When online inertia auto-tuning is used (H09-03 set to a non-zero value), the servo drive sets this parameter automatically and manual setting is not allowed. When H09-03 is set to 0 to disable online inertia auto-tuning, you can manually set this parameter.

◆ Note:

When the value of H08-15 is equal to the actual inertia ratio, the value of H08-00 or H08-03 (Speed loop gain) can represent the maximum follow-up frequency of actual speed loop.

H08-18	Name	Speed feedforward filter time constant			Setting Condition	During operation	Related Mode	P
	Value Range	0.00 to 64.00	Unit	ms	Effective Time	Immediate-ly	Default	0.50

Defines the filter time constant of speed feedforward.

H08-19	Name	Speed feedforward gain			Setting Condition	During operation	Related Mode	P
	Value Range	0.0 to 100.0	Unit	%	Effective Time	Immediate-ly	Default	0.0

In the position control and fully closed-loop control modes, speed feedforward is the product of speed feedforward signal multiplied by H08-19 and is part of the speed reference.

Increasing the setpoint improves the responsivity to position references and reduces the position deviation during operation at a constant speed.

Set H08-18 to a fixed value first, and then increase the value of H08-19 gradually from 0 to a certain value at which speed feedforward achieves the desired effect.

Adjust H08-18 and H08-19 repeatedly until a balanced performance is achieved.

◆ Note:

For how to enable the speed feedforward function and select the speed feedforward signal, see *H05-19 (Speed feedforward control)*.

H08-20	Name	Torque feedforward filter time constant			Setting Condition	At stop	Related Mode	PS
	Value Range	0.00 to 64.00	Unit	ms	Effective Time	Immediately	Default	0.50
Defines the filter time constant of torque feedforward.								

H08-21	Name	Torque feedforward gain			Setting Condition	During operation	Related Mode	PS
	Value Range	0.0 to 200.0	Unit	%	Effective Time	Immediately	Default	0.0

In control modes other than torque control, torque feedforward is the product of torque feedforward signal multiplied by H08-21 and is part of the torque reference.

Increasing the setpoint improves the responsivity to variable speed references.

Increasing the setpoint improves the responsivity to position references and reduces the position deviation during operation at a constant speed.

During parameter adjustment, set H08-20 (Torque feedforward filter time constant) to the default value first, and then increase H08-21 gradually to enhance the effect of torque feedforward. When speed overshoot occurs, keep H08-21 unchanged and increase the value of H08-20. Adjust H08-20 and H08-21 repeatedly until a balanced performance is achieved.

◆ Note:

For how to enable the torque feedforward function and select the torque feedforward signal, see *H06-11 (Torque feedforward control)*.

H08-22	Name	Speed feedback filter option			Setting Condition	At stop	Related Mode	PS
	Value Range	0 to 4	Unit	-	Effective Time	Immediately	Default	0

Defines the moving average filtering times for speed feedback.
The higher the setpoint, the weaker the speed feedback fluctuation, but the longer the feedback delay will be.

Value	Meaning
0	Disabled
1	Two times
2	Four times
3	Eight times
4	Sixteen times

◆ Note:

When H08-22 is set to a value greater than 0, H08-23 (Cutoff frequency of speed feedback low-pass filter) is invalid.

H08-23	Name	Cutoff frequency of speed feedback low-pass filter			Setting Condition	During operation	Related Mode	PS
	Value Range	100 to 4000	Unit	Hz	Effective Time	Immediately	Default	4000

Defines the cutoff frequency for first-order low-pass filtering on the speed feedback.

◆ Note:

The lower the setpoint, the weaker the speed feedback fluctuation, and the longer the feedback delay will be.

Setting this parameter to 4000 Hz negates the filtering effect.

H08-24	Name	PDFF control coefficient			Setting Condition	During operation	Related Mode	PS
	Value Range	0.0 to 100.0	Unit	-	Effective Time	Immediately	Default	100.0

Defines the control mode of the speed loop.

When the setpoint is 100.0, PI control (default control mode of the speed loop) is applied to the speed loop, which features fast dynamic response.

When the setpoint is 0.0, speed loop integral action is enhanced, which filters out low-frequency interference but also slows down the dynamic response.

H08-24 can be used to keep a good responsivity of the speed loop, with anti-interference capacity in low-frequency bands improved and speed feedback overshoot unaffected.

9.2.10 Group H09: Automatic Gain Adjustment Parameters

H09-00	Name	Automatic gain adjustment mode			Setting Condition	During operation	Related Mode	PST
	Value Range	0 to 2	Unit	-	Effective Time	Immediately	Default	0

Defines different gain adjustment modes. Related gain parameters can be set manually or automatically according to the rigidity meter.

Value	Meaning	Description
0	Invalid, gain parameters tuned manually	
1	Valid, gain parameters tuned automatically based on the rigidity meter setting	The 2nd gain does not change automatically based on the rigidity meter setting.
2	Positioning mode. Gain parameters are tuned automatically based on the rigidity meter setting.	The 2nd gain changes automatically based on the rigidity meter setting. It is one rigidity level higher than the 1st gain but does not exceed the highest rigidity level.

H09-01	Name	Rigidity level			Setting Condition	During operation	Related Mode	PST
	Value Range	0 to 31	Unit	-	Effective Time	Immediately	Default	12

Defines the rigidity level of the servo system. The higher the rigidity level, the stronger the gains and the quicker the response will be. But an excessively high rigidity level will cause vibration

The setpoint 0 indicates the lowest rigidity and 31 indicates the highest rigidity.

H09-02	Name	Adaptive notch mode			Setting Condition	During operation	Related Mode	PST
	Value Range	0 to 4	Unit	-	Effective Time	Immediately	Default	0

Defines the operation mode of the adaptive notch.

Value	Meaning
0	Parameters of the 3rd and 4th adaptive notches are not updated, but can be manually set.
1	One adaptive notch (3rd notch) is valid and its parameters are updated in real time based on vibration. The parameters cannot be set manually.
2	Two adaptive notches (3rd and 4th notches) are valid and their parameters are updated in real time based on vibration. The parameters cannot be set manually.
3	Only resonance frequency is detected and displayed in H09-24.
4	The 3rd and 4th notches are cleared and their settings are restored to default.

H09-03	Name	Online inertia auto-tuning mode			Setting Condition	During operation	Related Mode	PST
	Value Range	0 to 3	Unit	-	Effective Time	Immediately	Default	0

Defines whether to enable online inertia auto-tuning and the inertia ratio update speed during online inertia auto-tuning.

Value	Meaning	Description
0	Disabled	
1	Enabled, changing slowly	Applicable to the scenario where the actual load inertia ratio changes slowly.
2	Enabled, changing normally	Applicable to the scenario where the actual load inertia ratio changes slowly.
3	Enabled, changing quickly	Applicable to the scenario where the actual load inertia ratio changes quickly.

H09-04	Name	Low-frequency resonance suppression mode			Setting Condition	During operation	Related Mode	P
	Value Range	0 to 1	Unit	-	Effective Time	Immediate-ly	Default	0

Defines the low-frequency resonance suppression mode.

Value	Meaning
0	Manually set parameters of low-frequency resonance suppression filter (H09-38 and H09-39)
1	Automatically set parameters of low-frequency resonance suppression filter (H09-38 and H09-39)

H09-05	Name	Offline inertia auto-tuning mode			Setting Condition	At stop	Related Mode	PST
	Value Range	0 to 1	Unit	-	Effective Time	Immediate-ly	Default	0

Defines the offline inertia auto-tuning mode. The offline inertia auto-tuning function can be enabled through H0D-02.

Value	Meaning	Description
0	Positive/Negative triangle wave mode	Applicable to the scenario where the motor moveable travel is short.
1	JOG mode	Applicable to the scenario where the motor moveable travel is long.

For details about offline inertia auto-tuning, see *"6.2.1 Offline Inertia Auto-Tuning"*.

H09-06	Name	Max. speed of inertia auto-tuning			Setting Condition	At stop	Related Mode	PST
	Value Range	100 to 1000	Unit	RPM	Effective Time	Immediate-ly	Default	500

Defines the maximum permissible motor speed reference in the offline inertia auto-tuning mode.

During inertia auto-tuning, the higher the speed, the more accurate the auto-tuned values. Use the default setpoint in general cases.

H09-07	Name	Time constant for accelerating to the maximum speed during inertia auto-tuning			Setting Condition	At stop	Related Mode	PST
	Value Range	20 to 800	Unit	ms	Effective Time	Immediate-ly	Default	125

Defines the time for the motor to accelerate from 0 RPM to the maximum speed of inertia auto-tuning (H09-06) during offline inertia auto-tuning.

H09-08	Name	Inertia auto-tuning interval			Setting Condition	At stop	Related Mode	PST
	Value Range	50 to 10000	Unit	ms	Effective Time	Immediate-ly	Default	800

Defines the interval time between two consecutive speed references when H09-05 (Offline inertia auto-tuning mode) is set to 1 (Positive/Negative triangular wave mode).

H09-09	Name	Number of motor revolutions per inertia auto-tuning			Setting Condition	At display	Related Mode	PST
	Value Range	0.00 to 2.00	Unit	r	Effective Time	-	Default	-

Defines the motor revolutions per inertia auto-tuning when H09-05 (Offline inertia auto-tuning mode) is set to 1 (Positive/Negative triangular wave mode).

◆ Note:
When using the offline inertia auto-tuning function, check that the travel distance of the motor at the stop position is larger than the value of H09-09. If not, decrease the value of H09-06 (Maximum speed for inertia auto-tuning) or H09-07 (Time constant for accelerating to max. speed during inertia auto-tuning) properly until the motor travel distance fulfills the requirement.

H09-12	Name	1st notch frequency			Setting Condition	During operation	Related Mode	PS
	Value Range	50 to 4000	Unit	Hz	Effective Time	Immediately	Default	4000

Defines the center frequency of the notch, which is the mechanical resonance frequency.

In the torque control mode, setting the notch frequency to 4000 Hz deactivates the notch function.

H09-13	Name	1st notch width level			Setting Condition	During operation	Related Mode	PS
	Value Range	0 to 20	Unit	-	Effective Time	Immediately	Default	2

Defines the width level of the notch. Use the default value in general cases.

Width level is the ratio of the notch width to the notch center frequency.

H09-14	Name	1st notch depth level			Setting Condition	During operation	Related Mode	PS
	Value Range	0 to 99	Unit	-	Effective Time	Immediately	Default	0

Defines the depth level of the notch.

The depth level of the notch is the ratio between the input to the output at the notch center frequency.

The higher the setpoint, the lower the notch depth and the weaker the mechanical resonance suppression will be. Note that an excessively high setpoint may cause system instability.

For the use of notch, see *"6.6 Vibration Suppression"*.

H09-15	Name	2nd notch frequency			Setting Condition	During operation	Related Mode	PS
	Value Range	50 to 4000	Unit	Hz	Effective Time	Immediately	Default	4000

H09-16	Name	2nd notch width level			Setting Condition	During operation	Related Mode	PS
	Value Range	0 to 20	Unit	-	Effective Time	Immediately	Default	2

H09-17	Name	2nd notch depth level			Setting Condition	During operation	Related Mode	PS
	Value Range	0 to 99	Unit	-	Effective Time	Immediately	Default	0

Description of the 2nd notch parameters is the same as that of the 1st notch parameters.

H09-18	Name	3rd notch frequency			Setting Condition	During operation	Related Mode	PS
	Value Range	50 to 4000	Unit	Hz	Effective Time	Immediate-ly	Default	4000

H09-19	Name	3rd notch width level			Setting Condition	During operation	Related Mode	PS
	Value Range	0 to 20	Unit	-	Effective Time	Immediate-ly	Default	2

H09-20	Name	3rd notch depth level			Setting Condition	During operation	Related Mode	PS
	Value Range	0 to 99	Unit	-	Effective Time	Immediate-ly	Default	0

For the 3rd notch parameters, see parameters H09-12, H09-13, and H09-14.

Note:

The 3rd notch can be configured as an adaptive notch (H09-02 set to 1 or 2). In this case, the notch parameters are updated automatically by the servo drive and cannot be modified manually. When the notch frequency is 4000 Hz, the notch function is disabled.

H09-21	Name	4th notch frequency			Setting Condition	During operation	Related Mode	PS
	Value Range	50 to 4000	Unit	Hz	Effective Time	Immediate-ly	Default	4000

H09-22	Name	4th notch width level			Setting Condition	During operation	Related Mode	PS
	Value Range	0 to 20	Unit	-	Effective Time	Immediate-ly	Default	2

H09-23	Name	4th notch depth level			Setting Condition	During operation	Related Mode	PS
	Value Range	0 to 99	Unit	-	Effective Time	Immediate-ly	Default	0

For the 4th notch parameters, see parameters H09-12, H09-13, and H09-14.

Note:

The 4th notch can be configured as an adaptive notch (H09-02 set to 1 or 2). In this case, the notch parameters are updated automatically by the servo drive and cannot be modified manually. When the notch frequency is 4000 Hz, the notch function is disabled.

H09-24	Name	Auto-tuned resonance frequency			Setting Condition	At display	Related Mode	PS
	Value Range	0 to 2	Unit	Hz	Effective Time	-	Default	0

When H09-02 (Adaptive notch mode) is set to 3, the current mechanical resonance frequency is displayed.

H09-30	Name	Torque disturbance compensation gain			Setting Condition	During operation	Related Mode	PS
	Value Range	0.0 to 100.0	Unit	%	Effective Time	Immediately	Default	0.0

Sets the torque disturbance compensation gain in non-torque control modes.

Torque disturbance compensation can suppress impact of external disturbance torque on the speed. The larger the setpoint, the better the compensation effect and anti-interference performance will be. But an excessively high setpoint will cause vibration and noise. This parameter must be used together with H09-31.

H09-31	Name	Filter time constant of torque disturbance observer			Setting Condition	During operation	Related Mode	PS
	Value Range	0.00 to 25.00	Unit	ms	Effective Time	Immediately	Default	0.50

Sets the filter time constant of torque disturbance compensation filter in non-torque control modes.

This parameter has the smoothing effect on disturbance torque compensation (H09-30). The larger the setpoint, the more slowly the disturbance torque compensation takes effect. But the noise will be reduced.

Set H09-31 to a larger value first, and then increase the value of H09-30 gradually from 0 to a certain value at which disturbance observer achieves the desired effect. Finally, gradually decrease the value of H09-31 on the condition that the disturbance observer keeps valid.

H09-38	Name	Low-frequency resonance frequency			Setting Condition	During operation	Related Mode	P
	Value Range	1.0 to 100.0	Unit	Hz	Effective Time	Immediately	Default	100.0

Sets the frequency of low-frequency resonance suppression filter in position control and fully closed-loop control modes. When it is set to 100.0 Hz, the filter is invalid.

When H09-04 is set to 1 (Automatically set parameters of low-frequency resonance suppression filter), this parameter is automatically set by the servo drive.

H09-39	Name	Filter setting of low-frequency resonance frequency			Setting Condition	During operation	Related Mode	P
	Value Range	0 to 10	Unit	-	Effective Time	Immediately	Default	2

Defines the width level of the low-frequency suppression notch in position control and fully closed-loop control modes. Use the default value in general cases.

Value	Center Frequency for Suppression	Width for Suppression
0	H09-38	0, only vibration at the center frequency suppressed
1 to 10	H09-38	H09-38 x H09-39 x 4%

A large setpoint of H09-39 increases the frequency range of low-frequency resonance suppression but prolongs the positioning time. A small setpoint of H09-39 cannot suppress low-frequency resonance in the application (such as belt) where vibration frequency of the load changes. Thus, set this parameter repeatedly to seek the best effect.

When H09-04 is set to 1 (Automatically set parameters of low-frequency resonance suppression filter), this parameter is automatically set by the servo drive.

When H09-38 is set to 100.0 Hz, the filter is invalid.

9.2.11 Group H0A: Fault and Protection Parameters

H0A-03	Name	Retentive upon power failure			Setting Condition	During operation	Related Mode	-
	Value Range	0 to 1	Unit	-	Effective Time	Immediate-ly	Default	0

Sets whether to enable the retentive upon power failure function.

Value	Function	Description
0	Disabled	The function is disabled.
1	Enabled	The function is enabled. The servo drive automatically saves the encoder feedback pulse count (H0B-17) at power failure, which can be viewed in the corresponding parameter after next power-on.

H0A-04	Name	Motor overload protection gain			Setting Con-dition	At stop	Related Mode	-
	Value Range	50 to 300	Unit	%	Effective Time	Immediately	Default	100

Determines the motor overload duration before Er.620 (Motor overload) is reported.

You can change the setpoint to advance or delay the time when overload protection is triggered based on the motor temperature. The setpoint 50% indicates the time is cut by half; 150% indicates the time is prolonged by 50%.

Set this parameter based on the actual temperature of the motor.

H0A-08	Name	Overspeed threshold			Setting Condition	During operation	Related Mode	PST
	Value Range	0 to 10000	Unit	RPM	Effective Time	Immediate-ly	Default	0

Defines the overspeed threshold of the motor.

Value	Overspeed Threshold	Er.500 Detecting Condition
0	Max. motor speed x 1.2	After detecting that the speed feedback is larger than the overspeed threshold for several times, Er.500 (Overspeed fault) occurs.
1 to 10000	H0A-08 ⩾ (Max. motor speed x 1.2) Overspeed threshold: Max. motor speed x 1.2	
	H0A-08 > (Max. motor speed x 1.2) Overspeed threshold: H0A-08	

H0A-09	Name	Maximum position pulse frequency			Setting Condition	At stop	Related Mode	P
	Value Range	100 to 4000	Unit	kHz	Effective Time	Immediate-ly	Default	4000

Sets the maximum frequency of input pulses when the position reference source is set to pulse input (H05-00 set to 0) in the position control mode.

If the actual input pulse frequency is greater than the value of H0A-09, Er.B01 (Position reference input abnormal) will occur.

H0A-10	Name	Threshold of excessive position deviation			Setting Condi-tion	During opera-tion	Related Mode	P
	Value Range	1 to 1073741824	Unit	Encoder/reference unit	Effective Time	Immedi-ately	Default	3145728

The default value is 3145728.

Defines the threshold for excessive position deviation in the position control mode.

When the position deviation exceeds this threshold, the drive reports Er.B00 (Excessive position deviation).

H0A-12	Name	Runaway protection selection			Setting Condition	During operation	Related Mode	PST
	Value Range	0 to 1	Unit	-	Effective Time	Immediate-ly	Default	1

Sets whether to enable the runaway protection function.

Value	Function	Description
0	Disabled	In the applications where the motor drives vertical axis or is driven by load, set H0A-12 to 0 to disable runaway fault (Er.234) detection.
1	Enabled	Enable the runway protection function.

H0A-16	Name	Threshold of low-frequency resonance position deviation			Setting Condition	During operation	Related Mode	P
	Value Range	1 to 1000	Unit	Encoder unit	Effective Time	Immediate-ly	Default	5

Sets the position deviation threshold at which the servo drive detects low-frequency resonance when the automatic low-frequency resonance suppression function is enabled (H09-04 set to 1).

The system considers that low-frequency resonance occurs when the position deviation exceeds H0A-16. Resonance may be detected more easily if this parameter is set to a small value.

H0A-17	Name	Position setting unit			Setting Condition	At stop	Related Mode	P
	Value Range	0 to 1	Unit	-	Effective Time	Immediate-ly	Default	0

Defines the unit for the position settings in H05-21, H05-22, and H0A-10.

Value	Description
0	Encoder unit
1	Reference unit

H0A-19	Name	DI8 filter time constant			Setting Condition	At stop	Related Mode	-
	Value Range	0 to 255	Unit	25 ns	Effective Time	Next pow-er-on	Default	80

H0A-20	Name	DI9 filter time constant			Setting Condition	At stop	Related Mode	-
	Value Range	0 to 255	Unit	25 ns	Effective Time	Next pow-er-on	Default	80

DI8 and DI9 are high-speed DI terminals. When peak interference exists on the external input signals, set H0A-19 or H0A-20 to eliminate the peak interference.

◆ Note:

The oscilloscope in Inovance software tool displays DI8 and DI9 signals before filtering, and does not display signals of width lower than 0.25 ms.

H0A-24	Name	Filter time constant of low-speed pulse input terminal			Setting Condition	At stop	Related Mode	P
	Value Range	0 to 255	Unit	25 ns	Effective Time	Next power-on	Default	30

Sets the filter time constant of low-speed pulse input terminal which is used (H05-01 set to 0) when the position reference source is pulse input (H05-00 set to 0) in the position control mode.

When peak interference exists in the low-speed pulse input terminal, set H0A-24 to suppress the peak interference and prevent motor malfunction due to interference signal input to the servo drive.

Max. Frequency	Recommended Filter Time Constant (Unit: 25 ns)
< 167 k	30
167 k to 250 k	20
250 k to 500 k	10

H0A-25	Name	Filter time constant of speed feedback display value			Setting Condition	At stop	Related Mode	-
	Value Range	0 to 5000	Unit	ms	Effective Time	Immediately	Default	50

Sets the filter time constant of speed feedback signal to make the speed smoother.

H0A-26	Name	Motor overload shielding			Setting Condition	At stop	Related Mode	-
	Value Range	0 to 1	Unit	-	Effective Time	Immediately	Default	0

Defines whether to enable motor overload detection.

Value	Function
0	Not shield
1	Disable motor overload warning (Er.909) and fault detection (Er.620)

◆ Note:

Take caution when using the motor overload shielding function as it may easily lead to motor damage.

H0A-27	Name	Speed DO filter time constant			Setting Condition	At stop	Related Mode	-
	Value Range	0 to 5000	Unit	ms	Effective Time	Immediately	Default	10

Defines the low-pass filter time constant of the speed information for speed feedback and position references.

H0A-27 is used for speed-related DO signals (motor rotation output TGON, speed matching V-CMP, speed reached V-ARR, and zero speed signal ZERO). For details about the four DO signals, see *"5.3.5 Speed-related DO Signals"*.

H0A-27 defines the filter time constant for the position reference to convert to speed.

H0A-28	Name	Quadrature encoder filter time constant			Setting Condition	At stop	Related Mode	-
	Value Range	0 to 255	Unit	25 ns	Effective Time	Next power-on	Default	30

This parameter is used to suppress peak interference on feedback signals from the incremental quadrature encoder.

The recommended filter time constants based on the actual motor speeds are listed as follows:

Actual Motor Speed (Unit: RPM)	Recommended Filter Time Constant (Unit: 25 ns)
4000 to 6000	20
< 4000	30

H0A-30	Name	Filter time constant of high-speed pulse input terminal			Setting Condition	At stop	Related Mode	P
	Value Range	0 to 255	Unit	25 ns	Effective Time	Next power-on	Default	3

Sets the filter time constant of high-speed pulse input terminal which is used (H05-01 set to 1) when the position reference source is pulse input (H05-00 set to 1) in the position control mode.

When peak interference exists in the high-speed pulse input terminal, set H0A-30 to suppress the peak interference and prevent motor malfunction due to interference signal input to the servo drive.

Max. Frequency	Recommended Filter Time Constant (Unit: 25 ns)
500 k to 1 M	5
> 1 M	3

H0A-32	Name	Time window of locked rotor over-temperature protection			Setting Condition	During operation	Related Mode	-
	Value Range	10 to 65535	Unit	ms	Effective Time	Immediately	Default	200

Defines the over-temperature duration before Er.630 (Motor stall) is detected by the servo drive.

H0A-32 can be used to adjust the sensitivity of motor stall over-temperature detection.

H0A-33	Name	Locked rotor over-temperature protection			Setting Condition	During operation	Related Mode	-
	Value Range	0 to 1	Unit	-	Effective Time	Immediately	Default	1

Defines whether to enable the detection for Er.630 (Motor stall over-temperature protection).

Value	Function
0	Shield detection
1	Enable detection

H0A-36	Name	Encoder multi-turn overflow fault selection			Setting Condition	At stop	Related Mode	PST
	Value Range	0 to 1	Unit	-	Effective Time	Immediately	Default	0

Defines whether to shield the encoder multi-turn overflow fault in the absolute position linear mode (H02-01 set to 1).

Value	Function
0	Not shield
1	Shield

H0A-40	Name	Soft limit function			Setting Condition	At stop	Related Mode	PST
	Value Range	0 to 2	Unit	1	Effective Time	Immediate-ly	Default	0

Value	Function
0	Disabled
1	Enabled immediately after power-on
2	Enabled after homing

H0A-41	Name	Soft limit maximum value			Setting Condition	At stop	Related Mode	PST
	Value Range	–2147483648 to +2147483647	Unit	Reference unit	Effective Time	Immediate-ly	Default	2147483648

H0A-43	Name	Soft limit minimum value			Setting Condition	At stop	Related Mode	PST
	Value Range	–2147483648 to +2147483647	Unit	Reference unit	Effective Time	Immediate-ly	Default	–2147483648

Soft limit setting:

When H0A-40 is set to 0, the soft limit function is disabled.

When H0A-40 is set to 1, the soft limit function is enabled immediately after the servo drive is powered on. When the absolute position counter (H0B-07) is greater than the value of H0A-41, the servo drive reports the warning Er.950 and stops at the forward limit. When the absolute position encounter (H0B-07) is smaller than the value of H0A-43, the servo drive reports the warning Er.952 and stops at the reverse limit.

When H0A-40 is set to 2, the soft limit function is enabled after homing at power on. When the absolute position counter (H0B-07) is greater than the value of H0A-41, the servo drive reports the warning Er.950 and stops at the forward limit after homing. When the absolute position encounter (H0B-07) is smaller than the value of H0A-43, the servo drive reports the warning Er.952 and stops at the reverse limit after homing.

H0A-47	Name	Brake protection detection function			Setting Condition	During operation	Related Mode	ALL
	Value Range	0 to 1	Unit	-	Effective Time	Immediate-ly	Default	0

When this parameter is set to 0, the brake protection detection function is disabled. When this parameter is set to 1, the function is enabled.

H0A-48	Name	Soft limit function			Setting Condition	During operation	Related Mode	ALL
	Value Range	0 to 300.0	Unit	%	Effective Time	Immediate-ly	Default	30.0

Z-shaft gravity load auto-tuning is performed when H0D-24 is set to 1. The auto-tuned result is stored to H0A-48 after auto-tuning is successful. You can also manually set this parameter.

9.2.12 Group H0B: Monitoring Parameters

H0B-00	Name	Actual motor speed			Type	At display	Related Mode	PST
	Value Range	-	Unit	RPM			Default	-

Indicates the actual motor speed after round-off, which is accurate to 1 RPM.

Set in H0A-25 (Filter time constant of speed feedback display value) the filter time constant for H0B-00.

H0B-01	Name	Speed reference			Type	At display	Related Mode	PS
	Value Range	-	Unit	RPM			Default	-

Indicates the present speed reference (accurate to 1 RPM) of the drive in the position and speed control modes.

H0B-02	Name	Internal torque reference			Type	At display	Related Mode	PST
	Value Range	-	Unit	%			Default	-

Displays the present torque reference (accurate to 0.1%). The value 100.0% corresponds to the rated torque of the motor.

H0B-03	Name	Monitored DI status			Type	At display	Related Mode	PST
	Value Range	-	Unit	-			Default	-

Displays the level status of nine DIs without filtering.

Upper LED segments ON: high level (indicated by "1")
Lower LED segments ON: low level (indicated by "0")

For example, if DI1 is low level and DI2 and DI9 are high level, the binary value is 111111110, the decimal value of H0B-03 read from Inovance software tool is 510.

The keypad displays as follows:

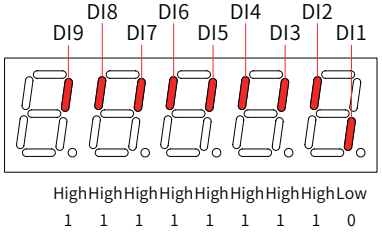

H0B-05	Name	Monitored DO status			Type	At display	Related Mode	PST
	Value Range	-	Unit	-			Default	-

Displays the level status of five DOs without filtering.

Upper LED segments ON: high level (indicated by "1")
Lower LED segments ON: low level (indicated by "0")

For example, if DO1 is low level and DO2 and DO5 are high level, the binary value is 11110, and the decimal value of H0B-05 read from Inovance software tool is 30.

The keypad displays as follows:

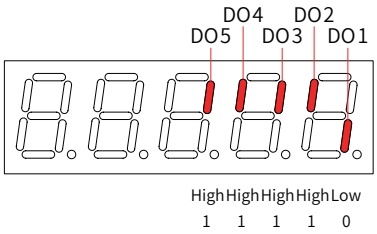

H0B-07	Name	Absolute position counter			Type	At display	Related Mode	PST
	Value Range	-	Unit	Reference unit			Default	-

Indicates the present absolute position (reference unit) of the motor in the position control mode.

This parameter is a 32-bit integer, which is displayed as a decimal on the keypad.

H0B-09	Name	Mechanical angle			Type	At display	Related Mode	PST
	Value Range	-	Unit	Encoder unit			Default	-

Displays the present mechanical angle (encoder unit) of the motor. The setpoint 0 indicates the mechanical angle is 0°.

$$\text{Actual mechanical angle} = \frac{\text{H0B-09}}{\text{H0B-09 max. value} + 1} \times 360.0°$$

Maximum value of H0B-09 for an incremental encoder: Number of encoder pulses per revolution x 4 – 1. For example, for the 2500-PPR incremental encoder, the maximum value of H0B-09 is 9999.

Maximum value of H0B-09 for an absolute encoder is 65535.

H0B-10	Name	Electrical angle			Type	At display	Related Mode	PST
	Value Range	-	Unit	°			Default	-

Indicates the present electrical angle of the motor, which is accurate to 0.1° .

The electrical angle variation range is ±360.0° during rotation. If the motor has four pairs of poles, each revolution generates four rounds of angle change from 0° to 359° . Similarly, if the motor has five pairs of poles, each revolution generates five rounds of angle change from 0° to 359° .

H0B-11	Name	Speed corresponding to the position reference			Type	At display	Related Mode	P
	Value Range	-	Unit	RPM			Default	-

Displays the speed corresponding to the position reference per control cycle of the servo drive in the position mode.

H0A-27 defines the filter time constant for the position reference to convert to speed.

H0B-12	Name	Average load ratio			Type	At display	Related Mode	PST
	Value Range	-	Unit	%			Default	-
Displays the percentage of the average load torque to the rated torque of the motor, which is accurate to 0.1%. The value 100.0% corresponds to the rated torque of the motor.								

H0B-13	Name	Input position reference counter			Type	At display	Related Mode	P
	Value Range	-	Unit	Reference unit			Default	-
Counts and displays the number of position references not divided or multiplied by the electronic gear ratio during servo running in the position mode. This parameter is a 32-bit integer, which is displayed as a decimal on the keypad.								

H0B-15	Name	Encoder position deviation counter			Type	At display	Related Mode	P
	Value Range	-	Unit	Encoder unit			Default	-
Counts and displays the position deviation value after being divided or multiplied by the electronic gear ratio in the position mode. This parameter is a 32-bit integer, which is displayed as a decimal on the keypad. ◆ Note: H0B-15 can be cleared when the condition defined in H05-16 (Clear action) is met.								

H0B-17	Name	Feedback pulse counter			Type	At display	Related Mode	PST
	Value Range	-	Unit	Encoder unit			Default	-
Counts the position pulses fed back by the encoder in any control mode. This parameter is a 32-bit integer, which is displayed as a decimal on the keypad.								

H0B-19	Name	Total power-on time			Type	At display	Related Mode	PST
	Value Range	-	Unit	s			Default	-
Records the total operating time of the servo drive. This parameter is a 32-bit integer, which is displayed as a decimal on the keypad. ◆ Note: If the servo drive is switched on and off repeatedly within a short period of time, a deviation within 1 hour may be present in the total power-on time record.								

H0B-21	Name	AI1 sampling voltage			Type	At display	Related Mode	PST
	Value Range	-	Unit	V			Default	-
Displays the actual sampling voltage of AI1, which is accurate to 0.01 V.								

H0B-22	Name	AI2 sampling voltage			Type	At display	Related Mode	PST
	Value Range	-	Unit	V			Default	-
Displays the actual sampling voltage of AI2, which is accurate to 0.01 V.								

H0B-24	Name	RMS value of phase current			Type	At display	Related Mode	PST
	Value Range	-	Unit	A			Default	-
Displays the RMS value of the phase current of the servo motor, which is accurate to 0.01 A.								

H0B-26	Name	Bus voltage			Type	At display	Related Mode	PST
	Value Range	-	Unit	V			Default	-
Displays the DC bus voltage of the main circuit input voltage after rectification, which is accurate to 0.01 V.								

H0B-27	Name	Module temperature			Type	At display	Related Mode	PST
	Value Range	-	Unit	°C			Default	-
Indicates the temperature of the module inside the servo drive, which can be used as a reference for estimating the actual temperature of the drive.								

H0B-33	Name	Fault log			Setting Condition	During operation	Related Mode	PST
	Value Range	0 to 9	Unit	-	Effective Time	Immediately	Default	0

Selects the latest 10 faults of the servo drive you want to view.

Value	Fault
0	Current fault
1	Last fault
2	Last 2nd fault
...	...
9	Last 9th fault

H0B-314	Name	Code of the selected fault			Type	At display	Related Mode	PST
	Value Range	-	Unit	-			Default	-

H0B-35	Name	Time stamp upon occurrence of the selected fault			Type	At display	Related Mode	PST
	Value Range	-	Unit	s			Default	-

H0B-37	Name	Motor speed upon occurrence of the selected fault			Type	At display	Related Mode	PST
	Value Range	-	Unit	RPM			Default	-

H0B-38	Name	Motor phase U current upon occurrence of the selected fault			Type	At display	Related Mode	PST
	Value Range	-	Unit	A			Default	-

H0B-39	Name	Motor phase V current upon occurrence of the selected fault			Type	At display	Related Mode	PST
	Value Range	-	Unit	A			Default	-

H0B-40	Name	Bus voltage upon occurrence of the selected fault			Type	At display	Related Mode	PST
	Value Range	-	Unit	V			Default	-

H0B-41	Name	Input terminal status upon occurrence of the selected fault			Type	At display	Related Mode	PST
	Value Range	-	Unit	-			Default	-

H0B-42	Name	Output terminal status upon occurrence of the selected fault			Type	At display	Related Mode	PST
	Value Range	-	Unit	-			Default	-

H0B-34 to H0B-42 display relevant parameter information when the fault selected in H0B-34 occurs.

H0B-53	Name	Position deviation counter			Type	At display	Related Mode	P
	Value Range	-	Unit	Reference unit			Default	-

Indicates the position deviation value which has not been divided or multiplied by the electronic gear ratio in the position control mode. This parameter is a 32-bit integer, which is displayed as a decimal on the keypad.

Position deviation (reference unit) is the value obtained after encoder position deviation calculation. The precision is compromised during division.

H0B-55	Name	Actual motor speed			Type	At display	Related Mode	PST
	Value Range	-	Unit	RPM			Default	-

Indicates the actual value of motor speed, which is accurate to 0.1 RPM.

This parameter is a 32-bit integer, which is displayed as a decimal on the keypad.

H0A-25 (Filter time constant of speed feedback display value) can be used to set the filter time constant of the speed feedback.

H0B-58	Name	Mechanical absolute position (low 32 bits)			Type	At display	Related Mode	PST
	Value Range	-	Unit	Encoder unit			Default	0
Displays the low 32-bit value (encoder unit) of the mechanical position feedback when the absolute encoder is used.								

H0B-60	Name	Mechanical absolute position (high 32 bits)			Type	At display	Related Mode	PST
	Value Range	-	Unit	Encoder unit			Default	0
Displays the high 32-bit value (encoder unit) of the mechanical position feedback when the absolute encoder is used.								

H0B-64	Name	Real-time position reference counter			Type	At display	Related Mode	PST
	Value Range	-	Unit	Reference unit			Default	-
Displays the value of the position reference counter before being divided or multiplied by the electronic gear ratio. This value is independent of the servo drive status and the control mode.								

H0B-70	Name	Number of absolute encoder revolutions			Type	At display	Related Mode	PST
	Value Range	-	Unit	1 Rev			Default	-
Indicates the number of revolutions of the absolute encoder.								

H0B-71	Name	Position of the absolute encoder within one turn			Type	At display	Related Mode	PST
	Value Range	-	Unit	Encoder unit			Default	-
Displays the position feedback of the absolute encoder within one turn.								

H0B-77	Name	Absolute position of absolute encoder (low 32 bits)			Type	At display	Related Mode	PST
	Value Range	-	Unit	Encoder unit			Default	-
Displays the low 32-bit value of the position feedback of the absolute encoder.								

H0B-79	Name	Absolute position of absolute encoder (high 32 bits)			Type	At display	Related Mode	PST
	Value Range	-	Unit	Encoder unit			Default	-
Displays the high 32-bit value of the position feedback of the absolute encoder.								

H0B-81	Name	Single-turn position of the rotating load (low 32 bits)			Type	At display	Related Mode	PST
	Value Range	-	Unit	Encoder unit			Default	-

Displays the low 32-bit value of the position feedback of the rotating load when the absolute system works in the rotation mode.

H0B-83	Name	Single-turn position of the rotating load (high 32 bits)			Type	At display	Related Mode	PST
	Value Range	-	Unit	Encoder unit			Default	-
Displays the high 32-bit value of the position feedback of the rotating load when the absolute system works in the rotation mode.								

H0B-85	Name	Single-turn position of the rotating load			Type	At display	Related Mode	PST
	Value Range	-	Unit	Reference unit			Default	-
Displays the high 32-bit value of the position feedback of the rotating load when the absolute system works in the rotation mode.								

9.2.13 Group H0C: Communication Parameters

H0C-00	Name	Servo drive axis address			Setting Condition	During operation	Related Mode	PST
	Value Range	1 to 127	Unit	-	Effective Time	Immediately	Default	1

Sets the servo drive axis address.

0: Broadcast address. The host controller writes all servo drives through the broadcast address. The servo drives act after receiving the frame with the broadcast address and do not return a response.

1 to 127: When multiple servo drives are networked, each servo drive has a unique address; otherwise, communication may fail.

H0C-02	Name	Baud rate of the serial port			Setting Condition	During operation	Related Mode	PST
	Value Range	0 to 5	Unit	-	Effective Time	Immediately	Default	5

Defines the communication rate between the servo drive and the host controller.

Value	Baud Rate
0	2400 kbp/s
1	4800 kbp/s
2	9600 kbp/s
3	19200 kbp/s
4	38400 kbp/s
5	57600 kbp/s

The baud rate set in the servo drive must be the same as that in the host controller. Otherwise, communication will fail.

H0C-03	Name	Modbus data format			Setting Condition	During operation	Related Mode	PST
	Value Range	0 to 3	Unit	-	Effective Time	Immediately	Default	0

Defines the data check mode between the servo drive and the host controller during communication.

Value	Data Format
0	No check, two stop bits
1	Even check, one stop bit
2	Odd check, one stop bit
3	No check, one stop bit

The data format of the servo drive and the host controller must be the same; otherwise, the communication fails.

H0C-08	Name	CAN communication rate			Setting Condition	During operation	Related Mode	PST
	Value Range	0 to 7	Unit	-	Effective Time	Immediately	Default	5

Defines the communication rate between the drive and the host controller in the CANlink or CANopen mode.

Value	Communication Rate
0	20 k
1	50 k
2	100 k
3	125 k
4	250 k
5	500 k
6	1 M
7	1 M

The communication rates of the servo drive and the host controller must be the same; otherwise, the communication fails.

H0C-09	Name	Communication VDI			Setting Condition	At stop	Related Mode	PST
	Value Range	0 to 1	Unit	-	Effective Time	Immediately	Default	0

Defines whether to use the VDI.

Value	Meaning
0	Disabled
1	Enabled

H0C-10	Name	VDI default value upon power-on			Setting Condition	During operation	Related Mode	PST
	Value Range	0 to 65535	Unit	-	Effective Time	Next power-on	Default	0

Sets the VDI default value upon power-on.

Use the VDI according to the following procedure:

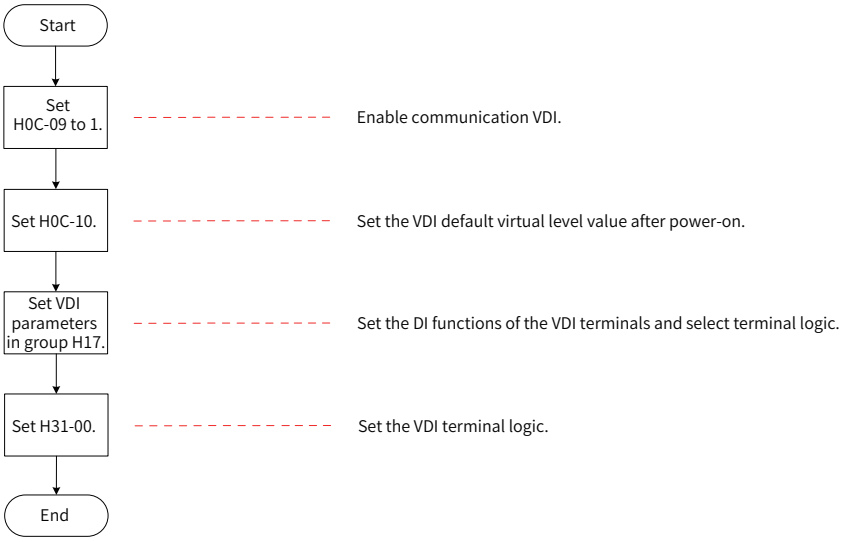

The VDI logic is determined by H0C-10 upon first power-on. Thereafter, the VDI logic is determined by H31-00 (VDI virtual level).

The value of H0C-10 displayed on the keypad is decimal, and H31-00 is not displayed on the keypad. In the converted binary value of H0C-10 (H31-00), "bit(n) = 1" indicates that the logic of VDI (n+1) is "1" and "bit(n) = 0" indicates that the logic of VDI (n+1) is "0".

H0C-11	Name	Communication VDO			Setting Condition	At stop	Related Mode	PST
	Value Range	0 to 1	Unit	-	Effective Time	Immediate-ly	Default	0

Defines whether to use the VDO.

Value	Meaning
0	Disabled
1	Enabled

H0C-12	Name	Default level of the VDO allocated with function 0			Setting Condition	At stop	Related Mode	PST
	Value Range	0 to 65535	Unit	-	Effective Time	Immediate-ly	Default	0

Sets the default virtual level of the VDO allocated with function 0 (No function).

Use VDOs according to the following procedure:

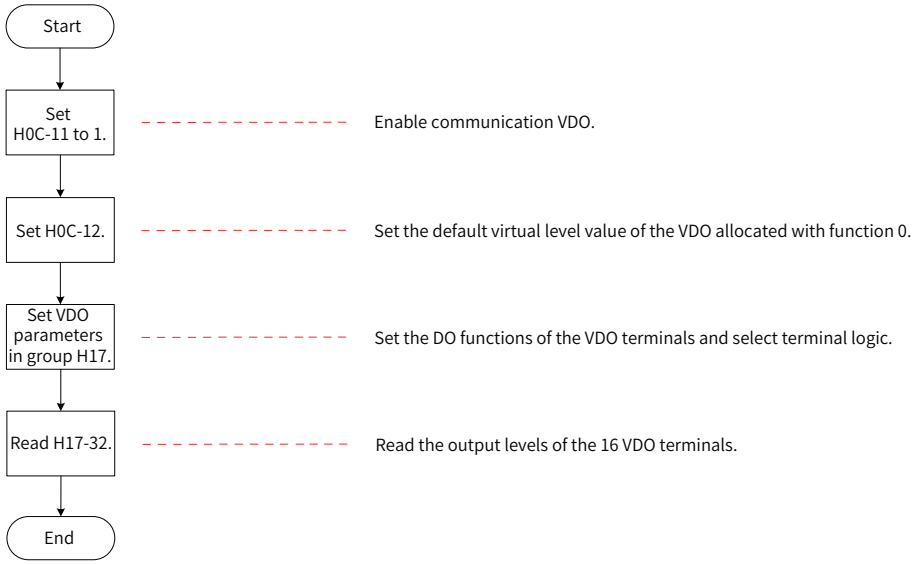

The value of H0C-12 (H17-32) displayed on the keypad is hexadecimal. In the converted binary value of H0C-12 (H17-32), "bit(n) = 1" indicates that the logic of VDO (n+1) is "1" and "bit(n) = 0" indicates that the logic of VDO (n+1) is "0".

You are recommended to set the VDO logic levels in group H17 be opposite to H0C-12 to facilitate differentiation.

H0C-13	Name	Update parameters written through Modbus communication to EEPROM			Setting Condition	During operation	Related Mode	PST
	Value Range	0 to 1	Unit	-	Effective Time	Immediate-ly	Default	1

Sets whether to store parameters written through Modbus communication to EEPROM.

Value	Meaning
0	Not update
1	Update parameters written through communication, except groups H0B and H0D, to EEPROM in real time

◆ Note:

Modification to H0C-13 will always be updated to EEPROM.

If you do not want to retain parameter modifications upon power failure, set H0C-13 to 0. Otherwise, if a great number of parameter settings are modified and the modifications are updated to EEPROM, EEPROM will be damaged and the servo drive reports the error Er.108 (Parameter storage fault). If you want to retain parameter modifications upon power failure, set H0C-13 to 1.

H0C-14	Name	Modbus error code			Setting Condition	At display	Related Mode	-
	Value Range	0 to 65535	Unit	1	Effective Time		Default	-

Displays the error code when a communication fault occurs. The error code is defined as follows:

New Protocol (Standard)	Previous protocol
0x0001: Illegal command code 0x0002: Illegal data address 0x0003: Illegal data 0x0004: Slave device fault	0x0002: Command code not being 0x03/0x06/0x10 0x0004: CRC checksum received and calculated by servo drive different from checksum in data frame 0x0008: Accessed parameter not exist 0x0010: Written parameter value exceeding limits 0x0080-: Written parameter modifiable only in the stop state but servo drive being in the running state

The value of H0C-14 displayed on the keypad is hexadecimal.

H0C-13	Name	Update parameters written through CAN communication to EEPROM			Setting Condition	During operation	Related Mode	PST
	Value Range	0 to 1	Unit	-	Effective Time	Immediately	Default	0

For details, see H0C-13.

H0C-25	Name	Modbus response delay			Setting Condition	During operation	Related Mode	PST
	Value Range	0 to 5000	Unit	1	Effective Time	Immediately	Default	1

Defines the delay from the moment the slave receives a command to the moment the slave returns a response.

H0C-26	Name	Sequence of Modbus communication data bits			Setting Condition	During operation	Related Mode	PST
	Value Range	0 to 1	Unit	1	Effective Time	Immediately	Default	1

Defines the 32-bit data transmission format of Modbus communication.

Value	32-Bit Data Sequence
0	High 16 bits before low 16 bits
1	Low 16 bits before high 16 bits

H0C-30	Name	Modbus error frame format			Setting Condition	During operation	Related Mode	PST
	Value Range	0 to 1	Unit	1	Effective Time	Immediately	Default	1

Defines the protocol for reporting communication errors.

Value	Meaning
0	Previous protocol
1	New Protocol (Standard)

9.2.14 Group H0D: Auxiliary Function Parameters

H0D-00	Name	Software reset			Setting Condition	At stop	Related Mode	-
	Value Range	0 to 1	Unit	-	Effective Time	Immediately	Default	0

Sets whether to support software reset.

Value	Function	Description
0	Disabled	
1	Enabled	Programs in the drive are reset automatically (similar to the program reset upon power-on) after the software reset function is enabled, without the need for a power cycle.

The conditions precedent are as follows:

- ◆ The servo is in the OFF state.
- ◆ There is no non-resettable fault such as No.1 fault.
- ◆ No EEPROM operation is performed. The software reset function is invalid when H0A-03 is set to 1.

H0D-01	Name	Fault reset			Setting Condition	At stop	Related Mode	-
	Value Range	0 to 1	Unit	-	Effective Time	Immediately	Default	0

Sets whether to support fault reset.

Value	Function	Description
0	Disabled	
1	Enabled	When a No.1 or No.2 resettable fault occurs, you can enable the fault reset function in the non-operational state after rectifying the fault cause, stopping the keypad from displaying the fault and allowing the drive to enter the "rdy" state. When a No.3 warning occurs, you can enable the fault reset function directly.

◆ Note:

For fault classification, see *"Chapter 8 CANopen Communication Cases"*.

After fault reset, the keypad stops displaying the fault only, but parameter modification still does not take effect.

This function is invalid to non-resettable faults. Take caution with this function if the fault causes are not removed.

H0D-02	Name	Offline inertia auto-tuning			Setting Condition	During operation	Related Mode	-
	Value Range	-	Unit	-	Effective Time	Immediately	Default	-

Used to enable offline inertia auto-tuning through the keypad. In the parameter display mode, switch to H0D-02 and press SET to enable offline inertia auto-tuning.

For details about offline inertia auto-tuning, see *"6.2.1 Offline Inertia Auto-Tuning"*.

H0D-03	Name	Reserved parameter			Setting Condition	-	Related Mode	-
	Value Range	-	Unit	-	Effective Time	-	Default	-

H0D-05	Name	Emergency stop			Setting Condition	During operation	Related Mode	
	Value Range	0 to 1	Unit	-	Effective Time	Immediate-ly	Default	0

Sets whether to enable emergency stop.

Value	Function
0	Disabled
1	Enabled

When this function is enabled, the servo drive stops immediately according to the setpoint of H02-05 regardless of its state.

H0D-10	Name	Automatic adjustment of analog channel			Setting Condition	At stop	Related Mode	-
	Value Range	0 to 2	Unit	-	Effective Time	Immediate-ly	Default	0

Sets whether to enable automatic adjustment of analog channels and selects the channel you want to adjust.

Value	Function
0	Disabled
1	AI1 adjustment
2	AI2 adjustment

When automatic adjustment of the analog channel is enabled, the drive automatically corrects the zero drift voltage of the analog channel to improve signal detection accuracy. The zero drift value after adjustment is automatically stored to the corresponding parameter (H03-54 or H03-59) in the servo drive.

H0D-11	Name	Jog trial run			Setting Condition	-	Related Mode	-
	Value Range	-	Unit	-	Effective Time	-	Default	-

The parameter to access the jog trial run function from the keypad.

You can set this parameter on the keypad to perform jog trial run. For details, see *"5.4.1 Torque Reference Input Setting"*.

This function is irrelevant to the servo control mode.

H0D-17	Name	Forced DI/DO selection			Setting Condition	During operation	Related Mode	-
	Value Range	0 to 3	Unit	-	Effective Time	Immediate-ly	Default	0

Defines whether to enable forced DI/DO.

Value	Function
0	Disabled
1	Forced DI enabled, forced DO disabled
2	Forced DO enabled, forced DI disabled
3	Forced DI and DO enabled

H0D-18	Name	Forced DI setting			Setting Condition	During operation	Related Mode	-
	Value Range	0 to 0x01FF	Unit	-	Effective Time	Immediately	Default	0x01FF

Defines the level logic of the DI functions set in group H03 when forced DI is active (H0D-17 set to 1 or 3).

The value of H0D-18 is displayed as a hexadecimal on the keypad. When it is converted to a binary value, "bit(n) = 1" indicates the level logic of DI function is high level; "bit(n) = 0" indicates the level logic of the DI function is low level.

For example,

When the H0D-18 value is 0x01FE, and the corresponding binary value is 111111110, it means that the DI1 is low level and DI2 to DI9 are high level. The nine DI levels can also be monitored through H0B-03.

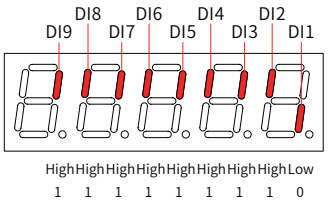

View also the DI terminal logic in group H03 when checking whether a DI function is valid.

H0D-19	Name	Forced DO setting			Setting Condition	During operation	Related Mode	-
	Value Range	0 to 0x001F	Unit	-	Effective Time	Immediately	Default	0

Defines whether the DO functions assigned in group H04 are active when forced DO is active (H0D-17 set to 2 or 3).

The value of H0D-19 is displayed as a hexadecimal on the keypad. When it is converted to a binary value, "bit(n) = 1" indicates the DO function is active; "bit(n) = 0" indicates the DO function is inactive. For example,

When the H0D-19 value is 0x1E and the corresponding binary value is 11110, it indicates that the DO1 function is invalid and functions of DO2 to DO5 are valid. The DO levels obtained based on the DO logics in group H04 and viewed in H0B-05 is shown as below. Assume that DO1 to DO5 logics in group H04 are 0, indicating low level output at function valid.

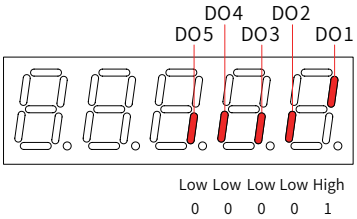

H0D-20	Name	Absolute encoder reset selection			Setting Condition	At stop	Related Mode	ALL
	Value Range	0 to 2	Unit	-	Effective Time	Immediate-ly	Default	0

Sets whether to reset the encoder internal faults and encoder feedback multi-turn data.

◆ Note: When you set H0D-20 to 2 and the faults and multi-turn data are reset, an abrupt change occurs in the encoder absolute position, and you need to perform the mechanical homing operation.

Value	Function
0	Disabled
1	Reset fault
2	Reset fault and multi-turn data

H0D-24	Name	Gravity load auto-tuning			Setting Condition	During operation	Related Mode	-
	Value Range	0 to 1	Unit	-	Effective Time	Immediate-ly	Default	0

Gravity load auto-tuning is performed when H0D-24 is set to 1. The auto-tuned result is stored to H0A-48 and the value of H0D-24 is restored to 0 after auto-tuning is successful.

9.2.15 Group H0F: Fully Closed-Loop Parameters

H0F-00	Name	Encoder feedback mode			Setting Condition	At stop	Related Mode	P
	Value Range	0 to 2	Unit	-	Effective Time	Immediate-ly	Default	0

Defines the encoder feedback signal source in fully closed-loop control.

Value	Encoder feedback mode	Description
0	Internal encoder feedback	The position feedback signals come from the motor encoder.
1	External encoder feedback	The position feedback signals come from the fully closed-loop external encoder. Electronic gear ratio 1 is used.
2	Internal/External encoder feedback switchover at electronic gear ratio switchover	The DI with function 24 (FunIN.24: GEAR_SEL) is used to control switchover. DI invalid: Internal encoder feedback, with electronic gear ratio 1 used DI valid: External encoder feedback, with electronic gear ratio 2 used

◆ Note:

In the fully closed-loop control mode, the position references are from the internal, and the speed reference unit is the internal encoder unit. Conversion is required during the speed setting; otherwise, an error will occur during running.

H0F-01	Name	External encoder operation mode			Setting Condition	At stop	Related Mode	P
	Value Range	0 to 1	Unit	-	Effective Time	Immediate-ly	Default	0

Defines the feedback pulse counting direction of internal and external encoders when the motor rotates in the fully closed-loop mode.

Value	Meaning	Description
0	Standard running direction	The pulse feedback counter of the internal encoder (H0F-18) is in the same direction as that of the external encoder (H0F-20) during rotation of the motor.
1	Reverse running direction	The pulse feedback counter of the counting direction of pulse feedback counter of the internal encoder (H0F-18) is opposite to the external encoder (H0F-20) during rotation of the motor.

◆ Note:

1: Ensure to check before trial run. For details, see *"5.1.1 Checklist Before Running"*.

2: Incorrect setting of this function will cause a runaway accident.

H0F-04	Name	External encoder pulses per motor revolution			Setting Condition	At stop	Related Mode	P
	Value Range	0 to 1073741824	Unit	External encoder unit	Effective Time	Next power-on	Default	10000

Defines the pulses fed back by the external encoder per revolution of the motor.

It defines the quantity relationship between feedback pulses from the external encoder and those from the internal encoder.

Calculate the value of this parameter through analyzing mechanical parameters. When rigid connection is applied between the motor and the external encoder (optical scale), you can also set this parameter using the following method:

1. Manually rotate the motor and observe H0F-18 (Feedback pulse counter of internal encoder) in the meantime. After ensuring that the motor has rotated for a full turn (H0F-18 set to motor resolution), calculate the change of H0F-20 (Feedback pulse counter of external encoder) and use the absolute value of the change as the value of H0F-04.

2. If H0F-18 is X1 and H0F-20 is Y1 before rotating the motor, and H0F-18 is X2 and H0F-20 is Y2 after rotating the motor, then H0F-04 = Servo motor revolution x (Y2 – Y1)/(X2 – X1). The calculated result must be positive; if not, perform step 1 again.

For non-rigid connection, an error may exist in the calculation result.

◆ Note:

Ensure that H0F-04 is set properly. Otherwise, Er.B02 (Excessive position deviation in fully closed-loop mode) may occur after the drive operates.

H0F-08	Name	Excessive position deviation in fully closed-loop mode			Setting Condition	During operation	Related Mode	P
	Value Range	0 to 1073741824	Unit	External encoder unit	Effective Time	Immediately	Default	10000

Defines the position deviation threshold at which the servo drive reports Er.B02 (Excessive position deviation in fully closed-loop mode).

When H0F-08 is set to 0, the servo drive does not detect Er.B02 and always clears the fully closed-loop position deviation.

H0F-10	Name	Clearing of position deviation in fully closed-loop mode			Setting Condition	During operation	Related Mode	P
	Value Range	0 to 100	Unit	r	Effective Time	Immediate-ly	Default	0

Defines the number of revolutions rotated by the motor per clear of the fully closed-loop position deviation during operation. The number of revolutions is reflected by H0F-18 (Feedback pulse counter of internal encoder).

Value n	Meaning
0	The servo drive always clears the fully closed-loop position deviation.
1 to 100	If the position deviation remains smaller than the value of H0F-08 after the motor turns N revolutions, the servo drive clears the position deviation at the nth revolution, and counts the position deviation and number of motor revolutions from 0 again.
	Once the position deviation becomes larger than the value of H0F-08 after the motor turns N revolutions, the servo drive immediately clears the position deviation. If external encoder feedback (H0F-00 set to 1 or 2) is used, Er.B02 will occur.

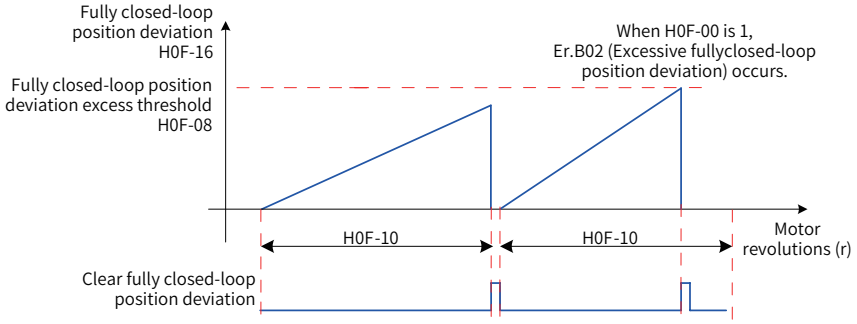

◆ Note:

The number of motor revolutions will not be cleared when the drive is in the non-operational state.

For example, assume that H0F-10 is 10:

If the motor turns for five revolutions when the S-ON signal is switched off, the servo drive clears the data to 0 when the motor turns for another five revolutions after the S-ON signal is switched on again.

Then, the servo drive clears the value for each 10 motor revolutions.

H0F-13	Name	Compound vibration suppression filter time constant			Setting Condition	At stop	Related Mode	P
	Value Range	0 to 6553.5	Unit	ms	Effective Time	Immediate-ly	Default	0

Defines the time constant for compound vibration suppression in the fully closed-loop control mode when external encoder feedback (H0F-00 set to 1 or 2) is used.

Increase the setpoint gradually and check the change in the response.

When the rigidity of the transmission mechanism between fully closed loop and internal loop is insufficient, set H0F-13 properly to improve system stability, which is to generate the effect of internal loop temporarily and form a fully closed loop again after the system is stabilized. When the rigidity is sufficient, there is no need to adjust this parameter.

H0F-16	Name	Fully closed-loop position deviation counter			Setting Condition	At display	Related Mode	P
	Value Range	–1073741824 to +1073741824	Unit	External encoder unit	Effective Time		Default	0

Counts and displays the position deviation absolute value in fully closed-loop control.

Pulse deviation in fully closed-loop control = Absolute position feedback of external encoder – Absolute position feedback conversion value of internal encoder

◆ Note:

"Compound control pulse deviation" displayed in the oscilloscope of Inovance software tool has the same definition as H0F-16. The absolute value of position deviation in fully closed-loop control is displayed.

If internal encoder feedback is used and H0F-08 is set to 0 or H0F-10 is set to 0, the value of H0F-16 is always 0.

H0F-18	Name	Internal encoder feedback pulse counter			Setting Condition	At display	Related Mode	P
	Value Range	–1073741824 to +1073741824	Unit	External encoder unit	Effective Time		Default	0

Counts and displays the number of feedback pulses of the internal encoder (after being divided or multiplied by electronic gear ratio, in internal encoder unit).

H0F-20	Name	External encoder feedback pulse counter			Setting Condition	At display	Related Mode	P
	Value Range	–1073741824 to +1073741824	Unit	External encoder unit	Effective Time	-	Default	0

Counts and displays the number of feedback pulses of the external encoder (after being divided or multiplied by electronic gear ratio, in external encoder unit).

9.2.16 Group H11: Multi-Position Parameters

H11-00	Name	Multi-position running mode			Setting Condition	At stop	Related Mode	P
	Value Range	0 to 3	Unit	-	Effective Time	Immediately	Default	1

Defines the multi-position running mode when the main position reference source is multi-position references (H05-00 set to 2) in the position control mode.

Value	Operating Mode	Remarks	Operation Curve
0	Individual operation	The drive stops after one cycle of operation. The drive automatically switches to the next speed. You can set the interval time between displacements. The multi-position reference is level-triggered.	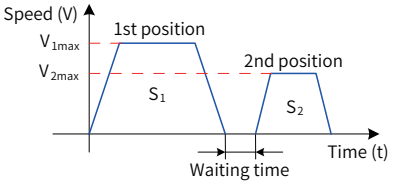 V_{1max} and V_{2max}: maximum values of speed 1 and speed 2 S_1 and S_2: 1st displacement and 2nd displacement
1	Cyclic operation	The starting displacement after the first cycle is 1st displacement. The drive automatically switches to the next speed. You can set the interval time between displacements. The multi-position reference is level-triggered.	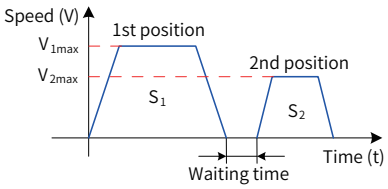
2	DI-based operation	The drive continues operating when the displacement No. is updated. The speed No. is determined by the DI logic. The interval time between displacements is determined by the command delay of the host controller. The multi-position reference is edge-triggered.	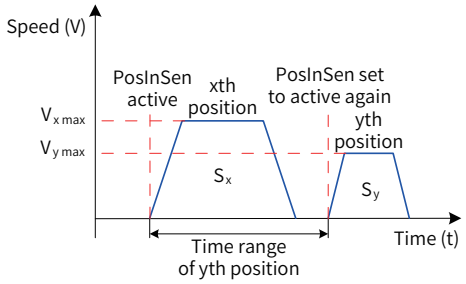 x and y: speed No. See H11-01 for the relationship between the speed No. and the DI logic. S_x and S_y: displacement x and displacement y
3	Sequential operation	The servo drive stops after running for one cycle. Cyclic operation is supported and the servo drive starts from the position No. set in H11-05. The drive automatically switches to the next speed. There is no interval time between displacements. The multi-position reference is level-triggered.	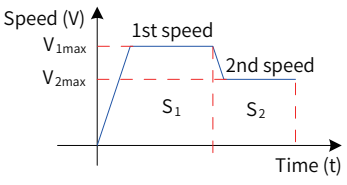

To use the multi-position function, assign FunIN.28 (PosInSen, multi-position reference enable) to a DI first. For the setting method, see *Group H03: Terminal Input Parameters*.

The positioning completed (COIN) signal is activated each time upon completion of a displacement. To determine whether a certain displacement is executed, use FunOUT.5 (COIN, positioning completed). For the setting method, see *Group H04: Terminal Output Parameters*.

The S-ON signal must remain active during operation of each speed. Otherwise, the drive stops immediately based on the stop mode defined by H02-05 and the positioning completed (COIN) signal is inactive.

In modes other than DI-based operation, if the S-ON signal is active but multi-position is disabled during operation of a certain displacement, the drive abandons the unsent displacement reference and stops, with the positioning completed (COIN) signal being active. If the multi-position function is enabled again, the displacement to be executed is defined by H11-02.

H11-01	Name	Number of position references			Setting Condition	At stop	Related Mode	P
	Value Range	1 to 16	Unit	-	Effective Time	Immediately	Default	1

Sets the total number of positions in displacement reference. You can set different displacements, running speed, and acceleration/deceleration time for each position.

H11-00 is not 2: Speeds are switched automatically in a sequence from 1, 2...H11-01.

H11-00 is 2: Assign four DIs (hardware DIs or VDIs) with DI functions 6 to 9 (FunIN.6: CMD1 to FunIN.9: CMD4) and control the DI logic through the host controller to switch between different speeds. The speed No. is a 4-bit binary value. The relationship between CMD1 to CMD4 and the speed No. is listed in the following table.

FunIN.9	FunIN.8	FunIN.7	FunIN.6	Speed No.
CMD4	CMD3	CMD2	CMD1	
0	0	0	0	1
0	0	0	1	2
...				
1	1	1	1	16

The value of CMD(n) is 1 upon active DI logic and 0 upon inactive DI logic.

H11-02	Name	Start position upon restart after pause			Setting Condition	At stop	Related Mode	P
	Value Range	0 to 1	Unit	-	Effective Time	Immediately	Default	0

Sets the start position No. when the multi-function running recovers after a pause.

◆ Pause:

1. The servo drive switches to another control mode or the interrupt positioning function is enabled during multi-position running.

2. The internal multi-position enable signal (FunIN.28: PosInSen) changes from active to inactive.

Value	Meaning	Description
0	Continue to execute the rest of the positions	For example, if H11-01 is set to 16 and the servo drives pauses when running to the 2nd position, it starts running from the 3rd position after restoring the multi-position running.
1	Start from the 1st position	For example, if H11-01 is set to 16 and the servo drives pauses when running to the 2nd position, it starts running from the 1st position after restoring the multi-position running.

◆ Note:

Once the servo drive pauses during multi-position running, it discards the uncompleted position in the current position reference.

When H11-00 is set to 2 (DI switchover), pause is permissible only when the servo drive switches to another control mode or the interrupt positioning function is enabled during running of the current position. The start position No. is determined by FunIN.6 to FunIN.9 after the multi-position running is restored.

H11-03	Name	Time unit			Setting Condition	At stop	Related Mode	P
	Value Range	0 to 1	Unit	-	Effective Time	Immediate-ly	Default	0

Sets the unit of the acceleration/deceleration time and waiting time during the multi-position running.

Acceleration/Deceleration time: time for the servo drive to change from 0 RPM to 1000 RPM or the reverse

Waiting time: time interval from ending of the current position reference to starting of the next position reference

Value	Meaning	Description
0	ms	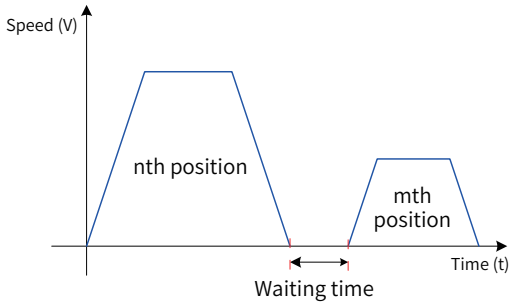
1	s	

When H11-00 is set to 3, H11-03 is invalid and there is no waiting time between positions.

When H11-00 is set to 2, H11-03 is invalid and the time interval between positions is determined by the delay time command from the host controller.

H11-04	Name	Displacement reference type			Setting Condition	At stop	Related Mode	P
	Value Range	0 to 1	Unit	-	Effective Time	Immediate-ly	Default	0

Sets the displacement reference type in the multi-position mode.

Displacement reference: sum of position references in a certain period of time

Relative displacement: position increment of the target position relative to the current motor position
Absolute displacement: position increment of the target position relative to the motor home position For example, the displacements of the nth position and mth position are respectively Pn (Pn > 0) and Pm (Pm > 0) and Pm > Pn:

Value	Displacement Reference Type	Description
0	Relative displacement reference	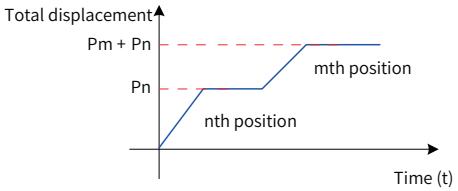 mth actual displacement: Pm
1	Absolute displacement reference	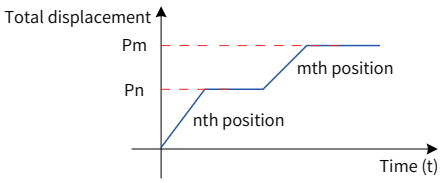 mth actual displacement: Pm – Pn

When the actual displacement is negative, the motor runs in the reverse direction.

H11-05	Name	Start position of sequential running			Setting Condition	At stop	Related Mode	P
	Value Range	0 to 16	Unit	-	Effective Time	Immedi-ately	Default	0

Sets whether to perform cyclic operation and the start position No. after the first turn when the multi-position sequential running is enabled (H11-00 set to 3).

Value	Meaning	Description
0	Not cyclic	The servo drive runs positions set tin H11-01 only once, and stops after the running is completed. Then, the motor enters the locked state.
1 to 16	1 to 16	Cyclic operation is supported and the servo drive starts from the position No. set in H11-05. H11-05 must be smaller than or equal to H11-01.

Note:

If H11-05 is greater than H11-01, H11-05 will be forced to 0.

H11-12	Name	1st displacement			Setting Condition	During operation	Related Mode	P
	Value Range	–1073741824 to +1073741824	Unit	Reference unit	Effective Time	Immedi-ately	Default	10000

Sets the 1st displacement in multi-position operation (in reference unit).

H11-14	Name	Max. running speed of 1st displacement			Setting Condition	During operation	Related Mode	P
	Value Range	1 to 6000	Unit	RPM	Effective Time	Immedi-ately	Default	200

Defines the maximum speed of 1st displacement in multi-position operation.

The maximum speed is the average operating speed when the motor is not in the acceleration/deceleration process. If H11-12 is set to a too low value, the actual motor speed will be lower than H11-14.

H11-15	Name	Acceleration/Deceleration time of 1st displacement			Setting Condition	During operation	Related Mode	P
	Value Range	0 to 65535	Unit	ms(s)	Effective Time	Immedi-ately	Default	10

Sets the time for the servo motor to accelerate from 0 RPM to 1000 RPM or the reverse for the 1st displacement.

Actual time of accelerating to the value of H11-14:

$$t = \frac{(H11\text{-}14) \times (H11\text{-}15)}{1000}$$

H11-16	Name	Waiting time after 1st displacement			Setting Condition	During operation	Related Mode	P
	Value Range	0 to 10000	Unit	ms(s)	Effective Time	Immedi-ately	Default	10

Sets the waiting time from completion of the 1st displacement to start of the next displacement.

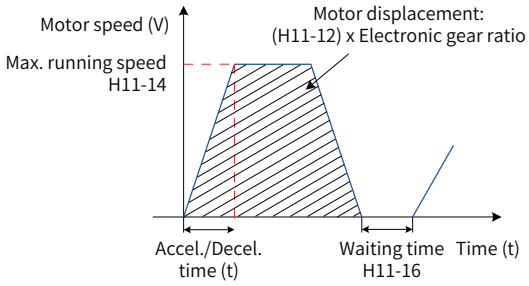

H11-17	Name	2nd displacement			Setting Condition	During operation	Related Mode	P
	Value Range	−1073741824 to +1073741824	Unit	Reference unit	Effective Time	Immedi-ately	Default	10000

H11-19	Name	Max. running speed of 2nd displacement			Setting Condition	During operation	Related Mode	P
	Value Range	1 to 6000	Unit	RPM	Effective Time	Immedi-ately	Default	200

H11-20	Name	Acceleration/Deceleration time of 2nd dis-placement			Setting Condition	During operation	Related Mode	P
	Value Range	0 to 65535	Unit	ms(s)	Effective Time	Immedi-ately	Default	10

H11-21	Name	Waiting time after 2nd displacement			Setting Condition	During operation	Related Mode	P
	Value Range	0 to 10000	Unit	ms(s)	Effective Time	Immedi-ately	Default	10

H11-22	Name	3rd displacement			Setting Condition	During operation	Related Mode	P
	Value Range	−1073741824 to +1073741824	Unit	Reference unit	Effective Time	Immedi-ately	Default	10000

H11-24	Name	Max. running speed of 3rd displacement			Setting Condition	During operation	Related Mode	P
	Value Range	1 to 6000	Unit	RPM	Effective Time	Immedi-ately	Default	200

H11-25	Name	Acceleration/Deceleration time of 3rd dis-placement			Setting Condition	During operation	Related Mode	P
	Value Range	0 to 65535	Unit	ms(s)	Effective Time	Immedi-ately	Default	10

H11-26	Name	Waiting time after 3rd displacement			Setting Condition	During operation	Related Mode	P
	Value Range	0 to 10000	Unit	ms(s)	Effective Time	Immedi-ately	Default	10

H11-27	Name	4th displacement			Setting Condition	During operation	Related Mode	P
	Value Range	–1073741824 to +1073741824	Unit	Reference unit	Effective Time	Immedi-ately	Default	10000

H11-29	Name	Max. running speed of 4th displacement			Setting Condition	During operation	Related Mode	P
	Value Range	1 to 6000	Unit	RPM	Effective Time	Immedi-ately	Default	200

H11-30	Name	Acceleration/Deceleration time of 4th dis-placement			Setting Condition	During operation	Related Mode	P
	Value Range	0 to 65535	Unit	ms(s)	Effective Time	Immedi-ately	Default	10

H11-31	Name	Waiting time after 4th displacement			Setting Condition	During operation	Related Mode	P
	Value Range	0 to 10000	Unit	ms(s)	Effective Time	Immedi-ately	Default	10

H11-32	Name	5th displacement			Setting Condition	During operation	Related Mode	P
	Value Range	–1073741824 to +1073741824	Unit	Reference unit	Effective Time	Immedi-ately	Default	10000

H11-34	Name	Max. running speed of 5th displacement			Setting Condition	During operation	Related Mode	P
	Value Range	1 to 6000	Unit	RPM	Effective Time	Immedi-ately	Default	200

H11-35	Name	Acceleration/Deceleration time of 5th dis-placement			Setting Condition	During operation	Related Mode	P
	Value Range	0 to 65535	Unit	ms(s)	Effective Time	Immedi-ately	Default	10

H11-36	Name	Waiting time after 5th displacement			Setting Condition	During operation	Related Mode	P
	Value Range	0 to 10000	Unit	ms(s)	Effective Time	Immedi-ately	Default	10

H11-37	Name	6th displacement			Setting Condition	During operation	Related Mode	P
	Value Range	–1073741824 to +1073741824	Unit	Reference unit	Effective Time	Immedi-ately	Default	10000

H11-39	Name	Max. running speed of 6th displacement			Setting Condition	During operation	Related Mode	P
	Value Range	1 to 6000	Unit	RPM	Effective Time	Immediately	Default	200

H11-40	Name	Acceleration/Deceleration time of 6th displacement			Setting Condition	During operation	Related Mode	P
	Value Range	0 to 65535	Unit	ms(s)	Effective Time	Immediately	Default	10

H11-41	Name	Waiting time after 6th displacement			Setting Condition	During operation	Related Mode	P
	Value Range	0 to 10000	Unit	ms(s)	Effective Time	Immediately	Default	10

H11-42	Name	7th displacement			Setting Condition	During operation	Related Mode	P
	Value Range	–1073741824 to +1073741824	Unit	Reference unit	Effective Time	Immediately	Default	10000

H11-44	Name	Max. running speed of 7th displacement			Setting Condition	During operation	Related Mode	P
	Value Range	1 to 6000	Unit	RPM	Effective Time	Immediately	Default	200

H11-45	Name	Acceleration/Deceleration time of 7th displacement			Setting Condition	During operation	Related Mode	P
	Value Range	0 to 65535	Unit	ms(s)	Effective Time	Immediately	Default	10

H11-46	Name	Waiting time after 7th displacement			Setting Condition	During operation	Related Mode	P
	Value Range	0 to 10000	Unit	ms(s)	Effective Time	Immediately	Default	10

H11-47	Name	8th displacement			Setting Condition	During operation	Related Mode	P
	Value Range	–1073741824 to +1073741824	Unit	Reference unit	Effective Time	Immediately	Default	10000

H11-49	Name	Max. running speed of 8th displacement			Setting Condition	During operation	Related Mode	P
	Value Range	1 to 6000	Unit	RPM	Effective Time	Immediately	Default	200

H11-50	Name	Acceleration/Deceleration time of 8th displacement			Setting Condition	During operation	Related Mode	P
	Value Range	0 to 65535	Unit	ms(s)	Effective Time	Immediately	Default	10

H11-51	Name	Waiting time after 8th displacement			Setting Condition	During operation	Related Mode	P
	Value Range	0 to 10000	Unit	ms(s)	Effective Time	Immedi-ately	Default	10

H11-52	Name	9th displacement			Setting Condition	During operation	Related Mode	P
	Value Range	–1073741824 to +1073741824	Unit	Reference unit	Effective Time	Immedi-ately	Default	10000

H11-54	Name	Max. running speed of 9th displacement			Setting Condition	During operation	Related Mode	P
	Value Range	1 to 6000	Unit	RPM	Effective Time	Immedi-ately	Default	200

H11-55	Name	Acceleration/Deceleration time of 9th dis-placement			Setting Condition	During operation	Related Mode	P
	Value Range	0 to 65535	Unit	ms(s)	Effective Time	Immedi-ately	Default	10

H11-56	Name	Waiting time after 9th displacement			Setting Condition	During operation	Related Mode	P
	Value Range	0 to 10000	Unit	ms(s)	Effective Time	Immedi-ately	Default	10

H11-57	Name	10th displacement			Setting Condition	During operation	Related Mode	P
	Value Range	–1073741824 to +1073741824	Unit	Reference unit	Effective Time	Immedi-ately	Default	10000

H11-59	Name	Max. running speed of 10th displacement			Setting Condition	During operation	Related Mode	P
	Value Range	1 to 6000	Unit	RPM	Effective Time	Immedi-ately	Default	200

H11-60	Name	Acceleration/Deceleration time of 10th dis-placement			Setting Condition	During operation	Related Mode	P
	Value Range	0 to 65535	Unit	ms(s)	Effective Time	Immedi-ately	Default	10

H11-61	Name	Waiting time after 10th displacement			Setting Condition	During operation	Related Mode	P
	Value Range	0 to 10000	Unit	ms(s)	Effective Time	Immedi-ately	Default	10

H11-62	Name	11th displacement			Setting Condition	During operation	Related Mode	P
	Value Range	–1073741824 to +1073741824	Unit	Reference unit	Effective Time	Immedi-ately	Default	10000

H11-64	Name	Max. running speed of 11th displacement			Setting Condition	During operation	Related Mode	P
	Value Range	1 to 6000	Unit	RPM	Effective Time	Immedi-ately	Default	200

H11-65	Name	Acceleration/Deceleration time of 11th dis-placement			Setting Condition	During operation	Related Mode	P
	Value Range	0 to 65535	Unit	ms(s)	Effective Time	Immedi-ately	Default	10

H11-66	Name	Waiting time after 11th displacement			Setting Condition	During operation	Related Mode	P
	Value Range	0 to 10000	Unit	ms(s)	Effective Time	Immedi-ately	Default	10

H11-67	Name	12th displacement			Setting Condition	During operation	Related Mode	P
	Value Range	–1073741824 to +1073741824	Unit	Reference unit	Effective Time	Immedi-ately	Default	10000

H11-69	Name	Max. running speed of 12th displacement			Setting Condition	During operation	Related Mode	P
	Value Range	1 to 6000	Unit	RPM	Effective Time	Immedi-ately	Default	200

H11-70	Name	Acceleration/Deceleration time of 12th dis-placement			Setting Condition	During operation	Related Mode	P
	Value Range	0 to 65535	Unit	ms(s)	Effective Time	Immedi-ately	Default	10

H11-71	Name	Waiting time after 12th displacement			Setting Condition	During operation	Related Mode	P
	Value Range	0 to 10000	Unit	ms(s)	Effective Time	Immedi-ately	Default	10

H11-72	Name	13th displacement			Setting Condition	During operation	Related Mode	P
	Value Range	–1073741824 to +1073741824	Unit	Reference unit	Effective Time	Immedi-ately	Default	10000

H11-74	Name	Max. running speed of 13th displacement			Setting Condition	During operation	Related Mode	P
	Value Range	1 to 6000	Unit	RPM	Effective Time	Immedi-ately	Default	200

H11-75	Name	Acceleration/Deceleration time of 13th dis-placement			Setting Condition	During operation	Related Mode	P
	Value Range	0 to 65535	Unit	ms(s)	Effective Time	Immedi-ately	Default	10

H11-76	Name	Waiting time after 13th displacement			Setting Condition	During operation	Related Mode	P
	Value Range	0 to 10000	Unit	ms(s)	Effective Time	Immedi-ately	Default	10

H11-77	Name	14th displacement			Setting Condition	During operation	Related Mode	P
	Value Range	–1073741824 to +1073741824	Unit	Reference unit	Effective Time	Immedi-ately	Default	10000

H11-79	Name	Max. running speed of 14th displacement			Setting Condition	During operation	Related Mode	P
	Value Range	1 to 6000	Unit	RPM	Effective Time	Immedi-ately	Default	200

H11-80	Name	Acceleration/Deceleration time of 14th dis-placement			Setting Condition	During operation	Related Mode	P
	Value Range	0 to 65535	Unit	ms(s)	Effective Time	Immedi-ately	Default	10

H11-81	Name	Waiting time after 14th displacement			Setting Condition	During operation	Related Mode	P
	Value Range	0 to 10000	Unit	ms(s)	Effective Time	Immedi-ately	Default	10

H11-82	Name	15th displacement			Setting Condition	During operation	Related Mode	P
	Value Range	–1073741824 to +1073741824	Unit	Reference unit	Effective Time	Immedi-ately	Default	10000

H11-84	Name	Max. running speed of 15th displacement			Setting Condition	During operation	Related Mode	P
	Value Range	1 to 6000	Unit	RPM	Effective Time	Immedi-ately	Default	200

H11-85	Name	Acceleration/Deceleration time of 15th dis-placement			Setting Condition	During operation	Related Mode	P
	Value Range	0 to 65535	Unit	ms(s)	Effective Time	Immedi-ately	Default	10

H11-86	Name	Waiting time after 15th displacement			Setting Condition	During operation	Related Mode	P
	Value Range	0 to 10000	Unit	ms(s)	Effective Time	Immedi-ately	Default	10

H11-87	Name	16th displacement			Setting Condition	During operation	Related Mode	P
	Value Range	–1073741824 to +1073741824	Unit	Reference unit	Effective Time	Immedi-ately	Default	10000

H11-89	Name	Max. running speed of 16th displacement			Setting Condition	During operation	Related Mode	P
	Value Range	1 to 6000	Unit	RPM	Effective Time	Immediately	Default	200

H11-90	Name	Acceleration/Deceleration time of 16th displacement			Setting Condition	During operation	Related Mode	P
	Value Range	0 to 65535	Unit	ms(s)	Effective Time	Immediately	Default	10

H11-91	Name	Waiting time after 16th displacement			Setting Condition	During operation	Related Mode	P
	Value Range	0 to 10000	Unit	ms(s)	Effective Time	Immediately	Default	10

9.2.17 Group H12: Multi-Speed Parameters

H12-00	Name	Multi-speed reference running mode			Setting Condition	At stop	Related Mode	S
	Value Range	0 to 2	Unit	-	Effective Time	Immediately	Default	1

Defines the multi-speed running mode when the speed reference source is multi-speed reference (H06-01 set to 5 and H06-02 set to 1, 2, or 3) in the speed control mode.

Value	Operating Mode	Description	Operation Curve
0	Individual operation	The drive stops after one cycle of operation. The drive automatically switches to the next speed.	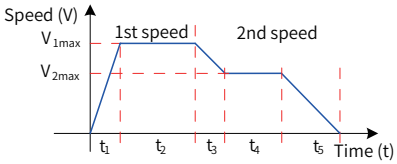 V_{1max} and V_{2max}: reference values of speed 1 and speed 2 t_1: actual acceleration/deceleration time of speed 1 t_3 and t_5: actual acceleration/deceleration time of speed 2
1	Cyclic operation	The drive starts from speed 1 after each cycle of operation. The drive automatically switches to the next speed. The cyclic operation state remains active as long as the S-ON signal is active.	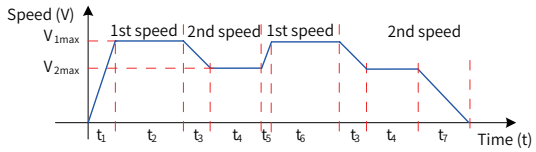 V_{1max} and V_{2max}: maximum operating speeds in position 1 and position 2.
2	External DI signal	The drive operates continuously as long as the S-ON signal is active. The speed No. is determined by the DI logic. The operating time of each speed is determined only by the interval time of speed switchover. The speed reference direction can be switched through FunIN.5 (DIR-SEL).	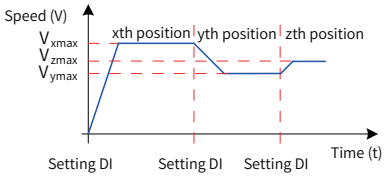 x and y: speed No. See H12-01 for the relationship between the speed No. and the DI logic. V_x and V_y: speed references for speeds x and y The speed No. determined by DI does not change, which means the speed reference operates continuously regardless of the reference operating time.

The S-ON signal must remain active during operation of each speed. Otherwise, the drive stops immediately based on the stop mode defined by H02-05.

Speed arrival (FunOUT.19: V-Arr) signal is activated every time a certain speed reaches the set value.

H12-01	Name	Number of speeds			Setting Condition	At stop	Related Mode	S
	Value Range	1 to 16	Unit	-	Effective Time	Immediately	Default	16

Defines the total number of speed references. Different speed references, operating time, and acceleration/deceleration time (four groups available) can be set for each speed.

H12-00 is not 2: Speeds are switched automatically in a sequence from 1, 2...H12-01.

H12-00 is 2: Assign four DIs (hardware DIs or VDIs) with DI functions 6 to 9 (FunIN.6: CMD1 to FunIN.9: CMD4) and control the DI logic through the host controller to switch between different speeds. The speed No. is a 4-bit binary value. The relationship between CMD1 to CMD4 and the speed No. is listed in the following table.

FunIN.9	FunIN.8	FunIN.7	FunIN.6	Speed No.
CMD4	CMD3	CMD2	CMD1	
0	0	0	0	1
0	0	0	1	2
...				
1	1	1	1	16

The value of CMD(n) is 1 upon active DI logic and 0 upon inactive DI logic.

H12-02	Name	Running time unit			Setting Condition	At stop	Related Mode	S
	Value Range	0 to 1	Unit	-	Effective Time	Immediately	Default	0

Defines the time unit in multi-speed operation.

Value	Meaning
0	s
1	min

H12-03	Name	Acceleration time 1			Setting Condition	At stop	Related Mode	S
	Value Range	0 to 65535	Unit	ms	Effective Time	Immediately	Default	10

H12-04	Name	Deceleration time 1			Setting Condition	At stop	Related Mode	S
	Value Range	0 to 65535	Unit	ms	Effective Time	Immediately	Default	10

H12-05	Name	Acceleration time 2			Setting Condition	At stop	Related Mode	S
	Value Range	0 to 65535	Unit	ms	Effective Time	Immediately	Default	50

H12-06	Name	Deceleration time 2			Setting Condition	At stop	Related Mode	S
	Value Range	0 to 65535	Unit	ms	Effective Time	Immediately	Default	50

H12-07	Name	Acceleration time 3			Setting Condition	At stop	Related Mode	S
	Value Range	0 to 65535	Unit	ms	Effective Time	Immediately	Default	100

H12-08	Name	Deceleration time 3			Setting Condition	At stop	Related Mode	S
	Value Range	0 to 65535	Unit	ms	Effective Time	Immedi-ately	Default	100

H12-09	Name	Acceleration time 4			Setting Condition	At stop	Related Mode	S
	Value Range	0 to 65535	Unit	ms	Effective Time	Immedi-ately	Default	150

H12-10	Name	Deceleration time 4			Setting Condition	At stop	Related Mode	S
	Value Range	0 to 65535	Unit	ms	Effective Time	Immedi-ately	Default	150

Four groups of acceleration/deceleration time can be set for each speed reference.

Acceleration time is the time for the motor to accelerate from 0 RPM to 1000 RPM at a constant speed.

Deceleration time is the time for the motor to decelerate from 1000 RPM to 0 RPM at a constant speed.

H12-20	Name	1st speed reference			Setting Condition	At stop	Related Mode	S
	Value Range	–6000 to +6000	Unit	RPM	Effective Time	Immedi-ately	Default	0

H12-21	Name	Running time of the 1st speed reference			Setting Condition	At stop	Related Mode	S
	Value Range	0 to 6553.5	Unit	s(min)	Effective Time	Immedi-ately	Default	5.0

Defines the running time of speed 1.

The operating time is the sum of the speed variation time from previous speed reference to present speed reference plus the average operating time of present speed reference.

If the operating time is set to 0, the drive skips this speed automatically.

As long as H12-00 (Multi-speed operation mode) is set to 2 and the speed No. determined by the external DI does not change, the drive continues operating at the speed defined by this speed reference, without being affected by the reference operating time.

H12-22	Name	Acceleration/Deceleration time of 1st speed reference			Setting Condition	At stop	Related Mode	S
	Value Range	0 to 4	Unit	-	Effective Time	Immedi-ately	Default	0

Defines the acceleration/deceleration time of speed 1.

Value	Acceleration/Deceleration Time	Remarks
0	Zero acceleration/deceleration time	Acceleration time: 0 Deceleration time: 0
1	Acceleration/Deceleration time 1	Acceleration time: H12-03 Deceleration time: H12-04
2	Acceleration/Deceleration time 2	Acceleration time: H12-05 Deceleration time: H12-06
3	Acceleration/Deceleration time 3	Acceleration time: H12-07 Deceleration time: H12-08
4	Acceleration/Deceleration time 4	Acceleration time: H12-09 Deceleration time: H12-10

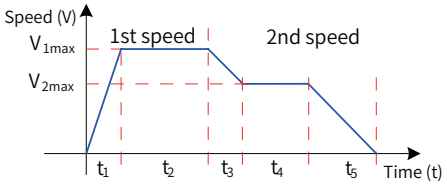

V_{1max} and V_{2max}: reference values of speed 1 and speed 2

t_1: actual acceleration/deceleration time of speed 1

t_3 and t_5: actual acceleration/deceleration time of speed 2

Running time of a certain speed = Time taken in switching from the last speed to current speed + Duration of constant-speed operation at current speed (For example, the running time of speed 1 is the sum of $t_1 + t_2$; the running time of speed 2 is the sum of $t_3 + t_4$).

Do not set the running time of a certain speed to 0. Otherwise, the drive skips this speed and switches to the next speed directly.

$$t_1 = \frac{V_1}{1000} \times \text{Acceleration time of the speed reference}$$

$$t_3 = \frac{|V_2 - V_1|}{1000} \times \text{Acceleration time of 2nd speed reference}$$

H12-23	Name	2nd speed reference			Setting Condition	At stop	Related Mode	S
	Value Range	–6000 to +6000	Unit	RPM	Effective Time	Immediately	Default	100

H12-24	Name	Running time of the 2nd speed reference			Setting Condition	At stop	Related Mode	S
	Value Range	0 to 6553.5	Unit	s(min)	Effective Time	Immediately	Default	5.0

H12-25	Name	Acceleration/Deceleration time of 2nd speed reference			Setting Condition	At stop	Related Mode	S
	Value Range	0 to 4	Unit	-	Effective Time	Immediately	Default	0

H12-26	Name	3rd speed reference			Setting Condition	At stop	Related Mode	S
	Value Range	–6000 to +6000	Unit	RPM	Effective Time	Immedi-ately	Default	300

H12-27	Name	Running time of the 3rd speed reference			Setting Condition	At stop	Related Mode	S
	Value Range	0 to 6553.5	Unit	s(min)	Effective Time	Immedi-ately	Default	5.0

H12-28	Name	Acceleration/Deceleration time of 3rd speed reference			Setting Condition	At stop	Related Mode	S
	Value Range	0 to 4	Unit	-	Effective Time	Immedi-ately	Default	0

H12-29	Name	4th speed reference			Setting Condition	At stop	Related Mode	S
	Value Range	–6000 to +6000	Unit	RPM	Effective Time	Immedi-ately	Default	500

H12-30	Name	Running time of the 4th speed reference			Setting Condition	At stop	Related Mode	S
	Value Range	0 to 6553.5	Unit	s(min)	Effective Time	Immedi-ately	Default	5.0

H12-31	Name	Acceleration/Deceleration time of 4th speed reference			Setting Condition	At stop	Related Mode	S
	Value Range	0 to 4	Unit	-	Effective Time	Immedi-ately	Default	0

H12-32	Name	5th speed reference			Setting Condition	At stop	Related Mode	S
	Value Range	–6000 to +6000	Unit	RPM	Effective Time	Immedi-ately	Default	700

H12-33	Name	Running time of the 5th speed reference			Setting Condition	At stop	Related Mode	S
	Value Range	0 to 6553.5	Unit	s(min)	Effective Time	Immedi-ately	Default	5.0

H12-34	Name	Acceleration/Deceleration time of 5th speed reference			Setting Condition	At stop	Related Mode	S
	Value Range	0 to 4	Unit	-	Effective Time	Immedi-ately	Default	0

H12-35	Name	6th speed reference			Setting Condition	At stop	Related Mode	S
	Value Range	–6000 to +6000	Unit	RPM	Effective Time	Immedi-ately	Default	900

H12-36	Name	Running time of the 6th speed reference			Setting Condition	At stop	Related Mode	S
	Value Range	0 to 6553.5	Unit	s(min)	Effective Time	Immedi-ately	Default	5.0

H12-37	Name	Acceleration/Deceleration time of 6th speed reference			Setting Condition	At stop	Related Mode	S
	Value Range	0 to 4	Unit	-	Effective Time	Immedi-ately	Default	0

H12-38	Name	7th speed reference			Setting Condition	At stop	Related Mode	S
	Value Range	–6000 to +6000	Unit	RPM	Effective Time	Immedi-ately	Default	600

H12-39	Name	Running time of the 7th speed reference			Setting Condition	At stop	Related Mode	S
	Value Range	0 to 6553.5	Unit	s(min)	Effective Time	Immedi-ately	Default	5.0

H12-40	Name	Acceleration/Deceleration time of 7th speed reference			Setting Condition	At stop	Related Mode	S
	Value Range	0 to 4	Unit	-	Effective Time	Immedi-ately	Default	0

H12-41	Name	8th speed reference			Setting Condition	At stop	Related Mode	S
	Value Range	–6000 to +6000	Unit	RPM	Effective Time	Immedi-ately	Default	300

H12-42	Name	Running time of the 8th speed reference			Setting Condition	At stop	Related Mode	S
	Value Range	0 to 6553.5	Unit	s(min)	Effective Time	Immedi-ately	Default	5.0

H12-43	Name	Acceleration/Deceleration time of 8th speed reference			Setting Condition	At stop	Related Mode	S
	Value Range	0 to 4	Unit	-	Effective Time	Immedi-ately	Default	0

H12-44	Name	9th speed reference			Setting Condition	At stop	Related Mode	S
	Value Range	–6000 to +6000	Unit	RPM	Effective Time	Immedi-ately	Default	100

H12-45	Name	Running time of the 9th speed reference			Setting Condition	At stop	Related Mode	S
	Value Range	0 to 6553.5	Unit	s(min)	Effective Time	Immedi-ately	Default	5.0

H12-46	Name	Acceleration/Deceleration time of 9th speed reference			Setting Condition	At stop	Related Mode	S
	Value Range	0 to 4	Unit	-	Effective Time	Immedi-ately	Default	0

H12-47	Name	10th speed reference			Setting Condition	At stop	Related Mode	S
	Value Range	–6000 to +6000	Unit	RPM	Effective Time	Immedi-ately	Default	–100

H12-48	Name	Running time of the 10th speed reference			Setting Condition	At stop	Related Mode	S
	Value Range	0 to 6553.5	Unit	s(min)	Effective Time	Immedi-ately	Default	5.0

H12-49	Name	Acceleration/Deceleration time of 10th speed reference			Setting Condition	At stop	Related Mode	S
	Value Range	0 to 4	Unit	-	Effective Time	Immedi-ately	Default	0

H12-50	Name	11th speed reference			Setting Condition	At stop	Related Mode	S
	Value Range	–6000 to +6000	Unit	RPM	Effective Time	Immedi-ately	Default	–300

H12-51	Name	Running time of the 11th speed reference			Setting Condition	At stop	Related Mode	S
	Value Range	0 to 6553.5	Unit	s(min)	Effective Time	Immedi-ately	Default	5.0

H12-52	Name	Acceleration/Deceleration time of 11th speed reference			Setting Condition	At stop	Related Mode	S
	Value Range	0 to 4	Unit	-	Effective Time	Immedi-ately	Default	0

H12-53	Name	12th speed reference			Setting Condition	At stop	Related Mode	S
	Value Range	–6000 to +6000	Unit	RPM	Effective Time	Immedi-ately	Default	–500

H12-54	Name	Running time of the 12th speed reference			Setting Condition	At stop	Related Mode	S
	Value Range	0 to 6553.5	Unit	s(min)	Effective Time	Immedi-ately	Default	5.0

H12-55	Name	Acceleration/Deceleration time of 12th speed reference			Setting Condition	At stop	Related Mode	S
	Value Range	0 to 4	Unit	-	Effective Time	Immedi-ately	Default	0

H12-56	Name	13th speed reference			Setting Condition	At stop	Related Mode	S
	Value Range	–6000 to +6000	Unit	RPM	Effective Time	Immedi-ately	Default	–700

H12-57	Name	Running time of the 13th speed reference			Setting Condition	At stop	Related Mode	S
	Value Range	0 to 6553.5	Unit	s(min)	Effective Time	Immedi-ately	Default	5.0

H12-58	Name	Acceleration/Deceleration time of 13th speed reference			Setting Condition	At stop	Related Mode	S
	Value Range	0 to 4	Unit	-	Effective Time	Immedi-ately	Default	0

H12-59	Name	14th speed reference			Setting Condition	At stop	Related Mode	S
	Value Range	–6000 to +6000	Unit	RPM	Effective Time	Immedi-ately	Default	–900

H12-60	Name	Running time of the 14th speed reference			Setting Condition	At stop	Related Mode	S
	Value Range	0 to 6553.5	Unit	s(min)	Effective Time	Immedi-ately	Default	5.0

H12-61	Name	Acceleration/Deceleration time of 14th speed reference			Setting Condition	At stop	Related Mode	S
	Value Range	0 to 4	Unit	-	Effective Time	Immedi-ately	Default	0

H12-62	Name	15th speed reference			Setting Condition	At stop	Related Mode	S
	Value Range	–6000 to +6000	Unit	RPM	Effective Time	Immedi-ately	Default	–600

H12-63	Name	Running time of the 15th speed reference			Setting Condition	At stop	Related Mode	S
	Value Range	0 to 6553.5	Unit	s(min)	Effective Time	Immedi-ately	Default	5.0

H12-64	Name	Acceleration/Deceleration time of 15th speed reference			Setting Condition	At stop	Related Mode	S
	Value Range	0 to 4	Unit	-	Effective Time	Immedi-ately	Default	0

H12-65	Name	16th speed reference			Setting Condition	At stop	Related Mode	S
	Value Range	–6000 to +6000	Unit	RPM	Effective Time	Immedi-ately	Default	–300

H12-66	Name	Running time of the 16th speed reference			Setting Condition	At stop	Related Mode	S
	Value Range	0 to 6553.5	Unit	s(min)	Effective Time	Immedi-ately	Default	5.0

H12-67	Name	Acceleration/Deceleration time of 16th speed reference			Setting Condition	At stop	Related Mode	S
	Value Range	0 to 4	Unit	-	Effective Time	Immedi-ately	Default	0

9.2.18 Group H17: VDI/VDO Parameters

H17-00	Name	VDI1 function selection			Setting Condition	During operation	Related Mode	-
	Value Range	0 to 37	Unit	-	Effective Time	At stop	Default	0

Sets the function of VDI1. Use the VDI according to the following procedure:

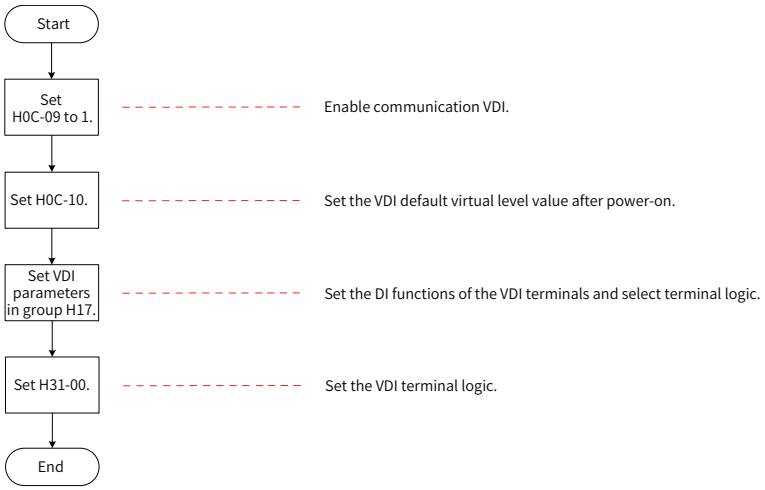

For details about DI functions, see *"10.22 DI/DO Functions"*.

◆ Note:

When the forced DI is used, logics of VDI1 to VDI9 are determined by the forced DI, that is, H0D-18.

Value	Function
0	No function
1	S-ON (Servo ON)
2	ALM-RST (Fault and warning reset)
3	GAIN-SEL (Gain switchover)
4	CMD-SEL (Main/Auxiliary reference switchover)
5	DIR-SEL (Multi-reference direction)
6	CMD1 (Multi-reference switchover 1)
7	CMD2 (Multi-reference switchover 2)
8	CMD3 (Multi-reference switchover 3)
9	CMD4 (Multi-reference switchover 4)
10	M1-SEL (Mode switchover 1)
11	M2-SEL (Mode switchover 2)
12	ZCLAMP (Zero clamp enable)
13	INHIBIT (Position reference inhibited)
14	P-OT (Positive limit switch)
15	N-OT (Negative limit switch)
16	P-CL (Forward external torque limit)
17	N-CL (Reverse external torque limit)
18	JOGCMD+ (Forward jog)

Value	Function
19	JOGCMD– (Forward jog)
20	PosStep (Step reference)
21	HX1 (Hand wheel multiplying factor signal 1)
22	HX2 (Hand wheel multiplying factor signal 2)
23	HX_EN (Hand wheel enable signal)
24	GEAR_SEL (Electronic gear ratio switchover)
25	ToqDirSel (Torque reference direction)
26	SpdDirSel (Speed reference direction selection)
27	PosDirSel (Position reference direction selection)
28	PosInSen (Multi-position reference enable)
29	XintFree (Interrupt positioning unlock)
30	None
31	HomeSwitch (Home switch)
32	HomingStart (Homing enable)
33	XintInhibit (Interrupt positioning inhibited)
34	EmergencyStop (Emergency stop)
35	ClrPosErr (Clear position deviation)
36	V_LmtSel (Internal speed limit source)
37	PulseInhibit (Pulse input inhibited)

Set H17-00 to a value listed in the preceding table.

H31-00 is not displayed on the keypad and can be set only through communication.

Each DI must be allocated with a unique function. Otherwise, Er.130 (Different DIs allocated with the same function) will occur.

H17-01	Name	VDI1 logic selection			Setting Condition	During operation	Related Mode	-
	Value Range	0 to 1	Unit	-	Effective Time	At stop	Default	0

Defines the level logic of VDI1 when the function assigned to VDI1 is active.

Value	VDI1 Logic When Function Valid	H31-00 Signal
0	Valid when the logic is 1	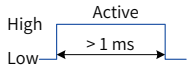
1	Valid when the written value changes from 0 to 1	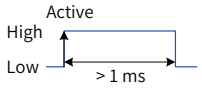

The VDI logic is determined by H0C-10 upon first power-on. Thereafter, the VDI logic is determined by H31-00 (VDI virtual level).

The value of H0C-10 displayed on the keypad is decimal, and H31-00 is not displayed on the keypad. In the converted binary value of H0C-10 (H31-00), "bit(n) = 1" indicates that the logic of VDI (n+1) is "1" and "bit(n) = 0" indicates that the logic of VDI (n+1) is "0".

H17-02	Name	VDI2 function selection			Setting Condition	During operation	Related Mode	-
	Value Range	0 to 37	Unit	-	Effective Time	At stop	Default	0

H17-03	Name	VDI2 logic selection			Setting Condition	During operation	Related Mode	-
	Value Range	0 to 1	Unit	-	Effective Time	At stop	Default	0

H17-04	Name	VDI3 function selection			Setting Condition	During operation	Related Mode	-
	Value Range	0 to 37	Unit	-	Effective Time	At stop	Default	0

H17-05	Name	VDI3 logic selection			Setting Condition	During operation	Related Mode	-
	Value Range	0 to 1	Unit	-	Effective Time	At stop	Default	0

H17-06	Name	VDI4 function selection			Setting Condition	During operation	Related Mode	-
	Value Range	0 to 37	Unit	-	Effective Time	At stop	Default	0

H17-07	Name	VDI4 logic selection			Setting Condition	During operation	Related Mode	-
	Value Range	0 to 1	Unit	-	Effective Time	At stop	Default	0

H17-08	Name	VDI5 function selection			Setting Condition	During operation	Related Mode	-
	Value Range	0 to 37	Unit	-	Effective Time	At stop	Default	0

H17-09	Name	VDI5 logic selection			Setting Condition	During operation	Related Mode	-
	Value Range	0 to 1	Unit	-	Effective Time	At stop	Default	0

H17-10	Name	VDI6 function selection			Setting Condition	During operation	Related Mode	-
	Value Range	0 to 37	Unit	-	Effective Time	At stop	Default	0

H17-11	Name	VDI6 logic selection			Setting Condition	During operation	Related Mode	-
	Value Range	0 to 1	Unit	-	Effective Time	At stop	Default	0

H17-12	Name	VDI7 function selection			Setting Condition	During operation	Related Mode	-
	Value Range	0 to 37	Unit	-	Effective Time	At stop	Default	0

H17-13	Name	VDI7 logic selection			Setting Condition	During operation	Related Mode	-
	Value Range	0 to 1	Unit	-	Effective Time	At stop	Default	0

H17-14	Name	VDI8 function selection			Setting Condition	During operation	Related Mode	-
	Value Range	0 to 37	Unit	-	Effective Time	At stop	Default	0

H17-15	Name	VDI8 logic selection			Setting Condition	During operation	Related Mode	-
	Value Range	0 to 1	Unit	-	Effective Time	At stop	Default	0

H17-16	Name	VDI9 function selection			Setting Condition	During operation	Related Mode	-
	Value Range	0 to 37	Unit	-	Effective Time	At stop	Default	0

H17-17	Name	VDI9 logic selection			Setting Condition	During operation	Related Mode	-
	Value Range	0 to 1	Unit	-	Effective Time	At stop	Default	0

H17-18	Name	VDI10 function selection			Setting Condition	During operation	Related Mode	-
	Value Range	0 to 37	Unit	-	Effective Time	At stop	Default	0

H17-19	Name	VDI10 logic selection			Setting Condition	During operation	Related Mode	-
	Value Range	0 to 1	Unit	-	Effective Time	At stop	Default	0

H17-20	Name	VDI11 function selection			Setting Condition	During operation	Related Mode	-
	Value Range	0 to 37	Unit	-	Effective Time	At stop	Default	0

H17-21	Name	VDI11 logic selection			Setting Condition	During operation	Related Mode	-
	Value Range	0 to 1	Unit	-	Effective Time	At stop	Default	0

H17-22	Name	VDI12 function selection			Setting Condition	During operation	Related Mode	-
	Value Range	0 to 37	Unit	-	Effective Time	At stop	Default	0

H17-23	Name	VDI12 logic selection			Setting Condition	During operation	Related Mode	-
	Value Range	0 to 1	Unit	-	Effective Time	At stop	Default	0

H17-24	Name	VDI13 function selection			Setting Condition	During operation	Related Mode	-
	Value Range	0 to 37	Unit	-	Effective Time	At stop	Default	0

H17-25	Name	VDI13 logic selection			Setting Condition	During operation	Related Mode	-
	Value Range	0 to 1	Unit	-	Effective Time	At stop	Default	0

H17-26	Name	VDI14 function selection			Setting Condition	During operation	Related Mode	-
	Value Range	0 to 37	Unit	-	Effective Time	At stop	Default	0

H17-27	Name	VDI14 logic selection			Setting Condition	During operation	Related Mode	-
	Value Range	0 to 1	Unit	-	Effective Time	At stop	Default	0

H17-28	Name	VDI15 function selection			Setting Condition	During operation	Related Mode	-
	Value Range	0 to 37	Unit	-	Effective Time	At stop	Default	0

H17-29	Name	VDI15 logic selection			Setting Condition	During operation	Related Mode	-
	Value Range	0 to 1	Unit	-	Effective Time	At stop	Default	0

H17-30	Name	VDI16 function selection			Setting Condition	During operation	Related Mode	-
	Value Range	0 to 37	Unit	-	Effective Time	At stop	Default	0

H17-31	Name	VDI16 logic selection			Setting Condition	During operation	Related Mode	-
	Value Range	0 to 1	Unit	-	Effective Time	At stop	Default	0

H17-32	Name	VDO virtual level			Setting Condition	At display	Related Mode	-
	Value Range	-	Unit	-	Effective Time	-	Default	-

Reads the virtual level of a VDO.

The value of H0C-12 (H17-32) displayed on the keypad is hexadecimal. In the converted binary value of H0C-12 (H17-32), "bit(n) = 1" indicates that the logic of VDO (n+1) is "1" and "bit(n) = 0" indicates that the logic of VDO (n+1) is "0".

You are recommended to set the VDO logic levels opposite to H0C-12.

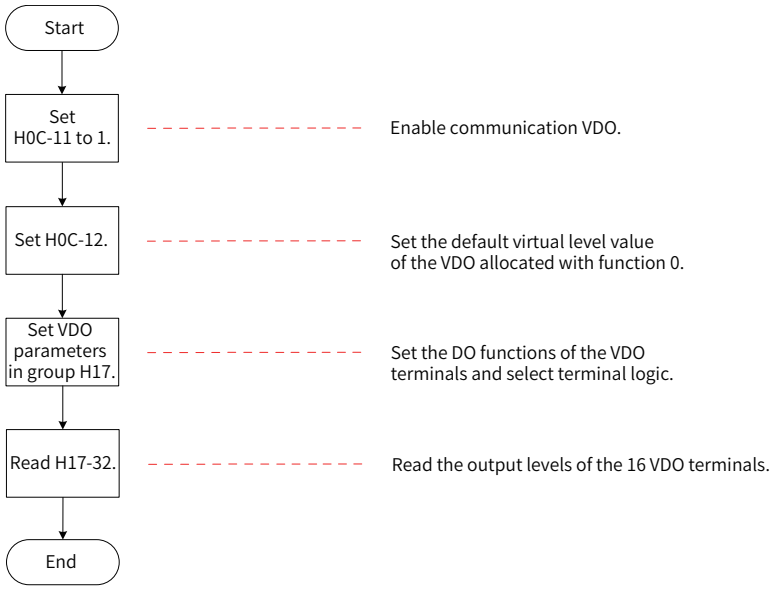

H17-33	Name	VDO1 function selection			Setting Condition	During operation	Related Mode	-
	Value Range	0 to 22	Unit	-	Effective Time	At stop	Default	0

Sets the function of VDO1.

For details about DO functions, see *"10.22 DI/DO Functions".*

Value	Function	Value	Function
0	No function	12	ALMO1: 3-digit fault code output
1	S-RDY: Servo ready	13	ALMO2: 3-digit fault code output
2	TGON: Motor rotation output	14	ALMO3: 3-digit fault code output
3	ZERO: Zero speed signal	15	Xintcoin: Interrupt positioning completed
4	V-CMP: Speed matching	16	HomeAttain: Homing completed
5	COIN: Positioning completed	17	ElecHomeAttain: Electrical homing completed
6	NEAR: Positioning near	18	ToqReach: Torque reached
7	C-LT: Torque limit	19	V-Arr: Speed reached
8	V-LT: Speed limit	20	AngIntRdy: Angle auto-tuning output
9	BK: Brake output	21	DB: Dynamic braking output
10	WARN: Warning output	22	CmdOk: Internal reference output
11	ALM: Fault output		

Set H17-33 to a value listed in the preceding table.

A DO function can be allocated to different DO terminals.

H17-34	Name	VDO1 logic selection			Setting Condition	During operation	Related Mode	-
	Value Range	0 to 1	Unit	-	Effective Time	At stop	Default	0

Value	VDO1 Logic	Description
0	Output 1 when valid	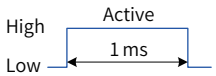
1	Output 0 when valid	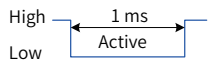

H17-35	Name	VDO2 function selection			Setting Condition	During operation	Related Mode	-
	Value Range	0 to 22	Unit	-	Effective Time	At stop	Default	0

H17-36	Name	VDO2 logic selection			Setting Condition	During operation	Related Mode	-
	Value Range	0 to 1	Unit	-	Effective Time	At stop	Default	0

H17-37	Name	VDO3 function selection			Setting Condition	During operation	Related Mode	-
	Value Range	0 to 22	Unit	-	Effective Time	At stop	Default	0

H17-38	Name	VDO3 logic selection			Setting Condition	During operation	Related Mode	-
	Value Range	0 to 1	Unit	-	Effective Time	At stop	Default	0

H17-39	Name	VDO4 function selection			Setting Condition	During operation	Related Mode	-
	Value Range	0 to 22	Unit	-	Effective Time	At stop	Default	0

H17-40	Name	VDO4 logic selection			Setting Condition	During operation	Related Mode	-
	Value Range	0 to 1	Unit	-	Effective Time	At stop	Default	0

H17-41	Name	VDO5 function selection			Setting Condition	During operation	Related Mode	-
	Value Range	0 to 22	Unit	-	Effective Time	At stop	Default	0

H17-42	Name	VDO5 logic selection			Setting Condition	During operation	Related Mode	-
	Value Range	0 to 1	Unit	-	Effective Time	At stop	Default	0

H17-43	Name	VDO6 function selection			Setting Condition	During operation	Related Mode	-
	Value Range	0 to 22	Unit	-	Effective Time	At stop	Default	0

H17-44	Name	VDO6 logic selection			Setting Condition	During operation	Related Mode	-
	Value Range	0 to 1	Unit	-	Effective Time	At stop	Default	0

H17-45	Name	VDO7 function selection			Setting Condition	During operation	Related Mode	-
	Value Range	0 to 22	Unit	-	Effective Time	At stop	Default	0

H17-46	Name	VDO7 logic selection			Setting Condition	During operation	Related Mode	-
	Value Range	0 to 1	Unit	-	Effective Time	At stop	Default	0

H17-47	Name	VDO8 function selection			Setting Condition	During operation	Related Mode	-
	Value Range	0 to 22	Unit	-	Effective Time	At stop	Default	0

H17-48	Name	VDO8 logic selection			Setting Condition	During operation	Related Mode	-
	Value Range	0 to 1	Unit	-	Effective Time	At stop	Default	0

H17-49	Name	VDO9 function selection			Setting Condition	During operation	Related Mode	-
	Value Range	0 to 22	Unit	-	Effective Time	At stop	Default	0

H17-50	Name	VDO9 logic selection			Setting Condition	During operation	Related Mode	-
	Value Range	0 to 1	Unit	-	Effective Time	At stop	Default	0

H17-51	Name	VDO10 function selection			Setting Condition	During operation	Related Mode	-
	Value Range	0 to 22	Unit	-	Effective Time	At stop	Default	0

H17-52	Name	VDO10 logic selection			Setting Condition	During operation	Related Mode	-
	Value Range	0 to 1	Unit	-	Effective Time	At stop	Default	0

H17-53	Name	VDO11 function selection			Setting Condition	During operation	Related Mode	-
	Value Range	0 to 22	Unit	-	Effective Time	At stop	Default	0

H17-54	Name	VDO11 logic selection			Setting Condition	During operation	Related Mode	-
	Value Range	0 to 1	Unit	-	Effective Time	At stop	Default	0

H17-55	Name	VDO12 function selection			Setting Condition	During operation	Related Mode	-
	Value Range	0 to 22	Unit	-	Effective Time	At stop	Default	0

H17-56	Name	VDO12 logic selection			Setting Condition	During operation	Related Mode	-
	Value Range	0 to 1	Unit	-	Effective Time	At stop	Default	0

H17-571	Name	VDO13 function selection			Setting Condition	During operation	Related Mode	-
	Value Range	0 to 22	Unit	-	Effective Time	At stop	Default	0

H17-58	Name	VDO13 logic selection			Setting Condition	During operation	Related Mode	-
	Value Range	0 to 1	Unit	-	Effective Time	At stop	Default	0

H17-59	Name	VDO14 function selection			Setting Condition	During operation	Related Mode	-
	Value Range	0 to 22	Unit	-	Effective Time	At stop	Default	0

H17-60	Name	VDO14 logic selection			Setting Condition	During operation	Related Mode	-
	Value Range	0 to 1	Unit	-	Effective Time	At stop	Default	0

H17-61	Name	VDO15 function selection			Setting Condition	During operation	Related Mode	-
	Value Range	0 to 22	Unit	-	Effective Time	At stop	Default	0

H17-62	Name	VDO15 logic selection			Setting Condition	During operation	Related Mode	-
	Value Range	0 to 1	Unit	-	Effective Time	At stop	Default	0

H17-63	Name	VDO16 function selection			Setting Condition	During operation	Related Mode	-
	Value Range	0 to 22	Unit	-	Effective Time	At stop	Default	0

H17-64	Name	VDO16 logic selection			Setting Condition	During operation	Related Mode	-
	Value Range	0 to 1	Unit	-	Effective Time	At stop	Default	0

9.2.19 Group H30: Servo-Related Variables Read Through Communication

H30-00	Name	Servo state read through communication			Setting Condition	Read-only	Related Mode	PST
	Value Range	-	Unit	-	Effective Time	-	Default	-

Reads the servo running state through communication.

The value of H30-00 is hexadecimal and is not displayed on the keypad. It is read as binary and each bit of the binary value is defined as follows:

Bit	Servo State	Description
bit0	Servo ready	It determines whether the servo main circuit DC bus voltage is ready and the servo drive is ready for running. 0: Servo not ready 1: Servo ready
bit1 to bit11	Reserved	-
bit12 to bit13	Servo running state	It determines the servo running state. 00: Servo not ready (main circuit DC bus voltage not setup correctly) 01: Servo ready (main circuit DC bus voltage setup correctly, servo drive is ready for running) 10: Servo running (S-ON active) 11: Servo fault (a No.1 or No.2 fault occurs)
bit14 to bit15	Reserved	-

H30-01	Name	DO function state 1 read through communication			Setting Condition	Read-only	Related Mode	PST
	Value Range	-	Unit	-	Effective Time	-	Default	-

Reads DO function 1 to DO function 16 through communication.

The value of H30-01 is hexadecimal and is not displayed on the keypad. It is read as binary through communication.

Bit	DO Function	Description
bit0	DO function 1 (FunOUT.1: S-RDY, servo ready)	0: Servo not ready 1: Servo ready
...		
bit15	DO function 16 (FunOUT.16: HomeAttain, homing output)	0: Homing not completed 1: Homing completed

Note: If no DO or VDO is allocated with function 9 (FunOUT.9: BK, brake output), FunOUT.9 in H30-01 is invalid.

H30-02	Name	DO function state 2 read through communication			Setting Condition	Read-only	Related Mode	PST
	Value Range	-	Unit	-	Effective Time	-	Default	-

Reads DO function 17 to DO function 20 through communication.

The value of H30-02 is hexadecimal and is not displayed on the keypad. It is read as binary through communication.

Bit	DO Function	Description
bit0	DO function 17 (FunOUT.17: S-ElecHomeAttain, electrical homing output)	0: Electrical homing not completed 1: Electrical homing completed
...		
bit4 to bit15	Reserved	

H30-03	Name	Pulse reference sampling value read through communication			Setting Condition	At display	Related Mode	PST
	Value Range	-	Unit	-	Effective Time	-	Default	-

Displays the number of pules at the pulse input terminal read through communication within a single control period when the position reference source is pulse input (H05-00 set to 1) or hand wheel input (a certain DI is allocated with FunIN.23 and the corresponding DI logic is active). This parameter is irrelevant to the servo running mode and running status.

9.2.20 Group H31: Servo-Related Variables Set Through Communication

H31-00	Name	VDI virtual level set through communication			Setting Condition	During operation	Related Mode	PST
	Value Range	0 to 65535	Unit	-	Effective Time	Immediately	Default	0

Sets the DI function level of VDI1 to VDI16.

The value of H31-00 is decimal which is not displayed on the keypad and can be set only through communication.

Use the VDI according to the following procedure:

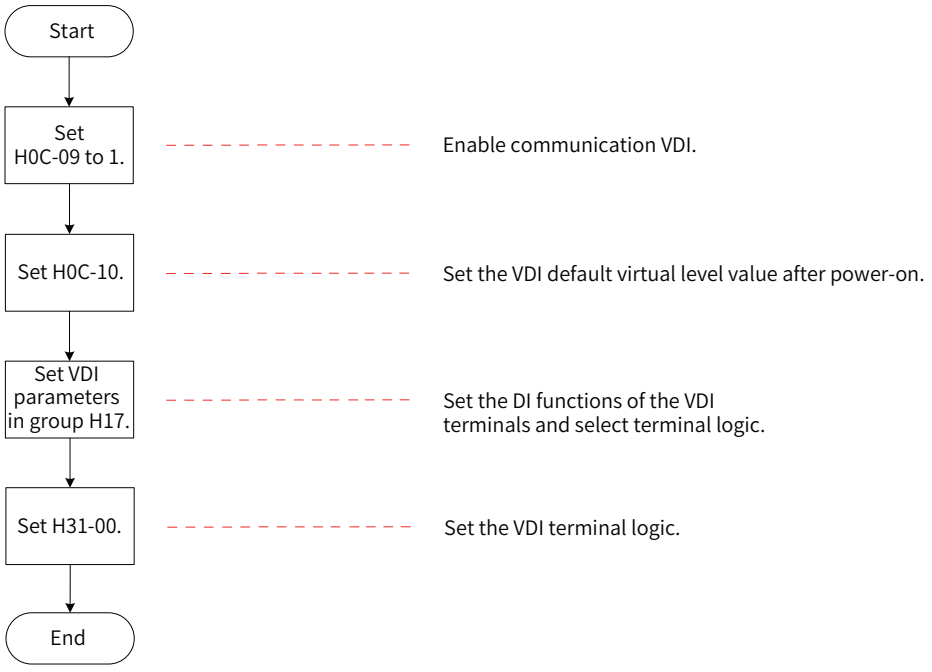

The VDI logic is determined by H0C-10 (Default VDI virtual level value upon power-on) upon initial power-on. Thereafter, the VDI logic is determined by H31-00.

The value of H0C-10 displayed on the keypad is decimal. In the converted binary value of H31-00 (H0C-10), "bit(n) = 1" indicates that the logic of VDI (n+1) is "1" and "bit(n) = 0" indicates that the logic of VDI (n+1) is "0".

For the setting of VDI functions and logics, see *"10.22 DI/DO Functions"*.

H31-04	Name	DO state set through communication			Setting Condition	During operation	Related Mode	PST
	Value Range	0 to 31	Unit	-	Effective Time	Immedi-ately	Default	0

Sets the DO states through communication based on the setting of H04-22.

The value of H31-04 is decimal which is not displayed on the keypad and can be set only through communication.

Use DOs according to the following procedure:

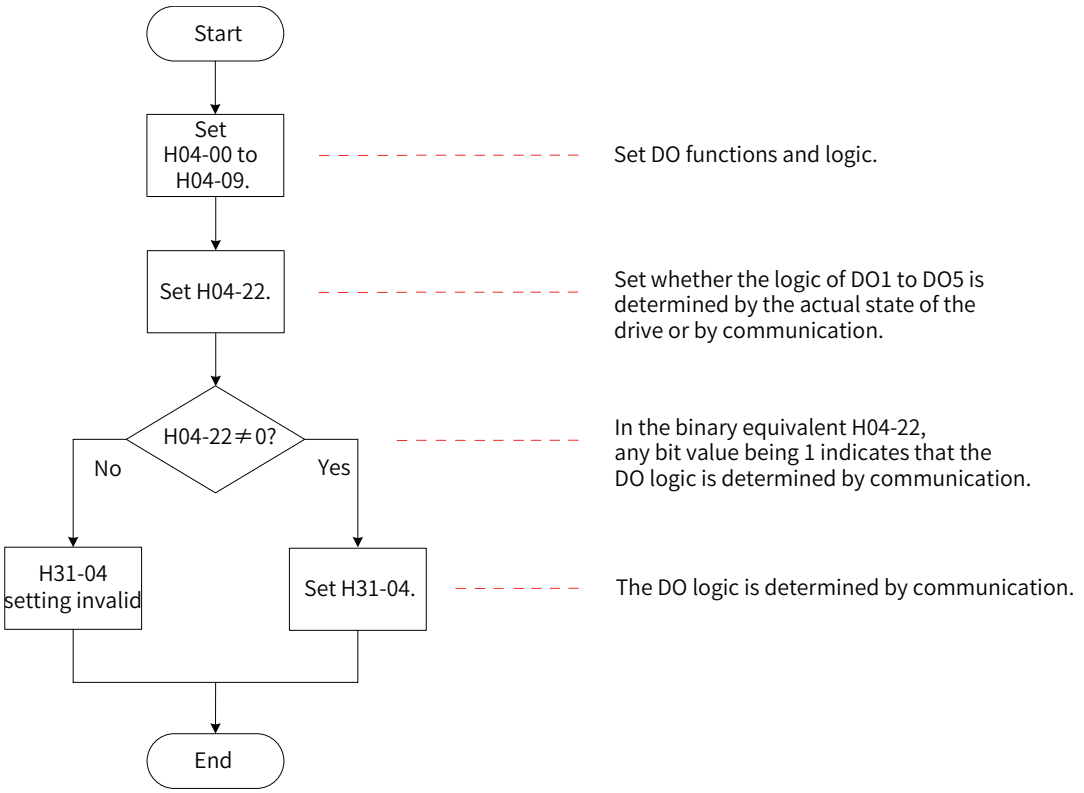

For H31-04, "bit(n) = 1" indicates the logic of DO(n+1) is active. "bit(n) = 0" indicates the logic of DO(n+1) is inactive.

H31-09	Name	Speed reference set through communica-tion			Setting Condition	During operation	Related Mode	S
	Value Range	–6000.000 to +6000.000	Unit	RPM	Effective Time	Immedi-ately	Default	0

Sets the speed reference (accurate to 0.001 RPM) when the speed reference source is communication in the speed control mode.

The value of H31-09 is a 32-bit data. It is not displayed on the keypad and can be set only through communication.

H31-11	Name	Torque reference set through communica-tion			Setting Condition	During operation	Related Mode	T
	Value Range	–100.000 to +100.000	Unit	%	Effective Time	Immedi-ately	Default	0

Sets the torque reference (accurate to 0.001%) when the torque reference source is communication in the torque control mode.

The setpoint 100.000% corresponds to the rated torque of the motor.

The value of H31-11 is a 32-bit data. It is not displayed on the keypad and can be set only through communication.

Chapter 10 Parameter List

Prepare an MD810 series power supply unit before using this product. For specifications of the related power supply unit, see the MD810 Series Standard Drive (Multidrive System) Advanced User Guide.

10.1 Parameters in Group 6000h

Parameter group 6000h contains supported sub-protocol DSP 402 related objects.

Index	Sub-index	Name	Access	PDO Mapping	Data Format	Unit	Value Range	Default	Change Mode	Effective Time
603F	00	Error code	RO	TPDO	UINT16	-	0 to 65535	0	-	-
6040	00	Control word	RW	RPDO	UINT16	-	0 to 65535	0	During operation	At stop
6041	00	Status word	RO	TPDO	UINT16	-	0 to xFFFF	0	-	-
605A	00	Quick stop option code	RW	NO	INT8		0 to 7	2	During operation	At stop
605D	00	Stop option code	RW	NO	INT8		1 to 3	1	During operation	At stop
6060	00	Modes of operation	RW	RPDO	INT8	-	0 to 10	0	During operation	At stop
6061	00	Modes of operation display	RO	TPDO	INT8	-	0 to 10	0	-	-
6062	00	Position reference	RO	TPDO	DINT32	Reference unit	-	-	-	-
6063	00	Position feedback	RO	TPDO	Dint32	Encoder unit	-	-	-	-
6064	00	Position feedback	RO	TPDO	Dint32	Reference unit	-	-	-	-
6065	00	Following error window	RW	RPDO	UDINT32	Reference unit	0 to (2^{32} – 1)	1048576	During operation	At stop
6067	00	Position window	RW	RPDO	UINT32	Encoder unit	0 to 65535	734	During operation	At stop
6068	00	Position window time	RW	RPDO	UINT16	ms	0 to 65535	x10	During operation	At stop
606C	00	Actual speed	RO	TPDO	INT32	Reference unit/s	-	-	-	-
606D	00	Speed reach threshold	RW	RPDO	UINT32	RPM	0 to 65535	10	During operation	At stop
606E	00	Velocity window time	RW	RPDO	UINT16	ms	0 to 65535	0	During operation	At stop
6071	00	Target torque	RW	RPDO	INT16	0.1%	–5000 to +5000	0	During operation	At stop
6072	00	Max. torque	RW	RPDO	UINT16	0.1%	0 to 5000	5000	During operation	At stop
6074	00	Torque reference	RO	TPDO	INT16	0.1%	–5000 to +5000	0	-	-
6077	00	Actual torque	RO	TPDO	INT16	0.1%	–5000 to +5000	0	-	-
607A	00	Target position	RW	RPDO	INT32	Reference unit	-2^{31} to ($+2^{31}$ – 1)	0	During operation	At stop
607C	00	Home offset	RW	RPDO	INT32	Reference unit	-2^{31} to ($+2^{31}$ – 1)	0	During operation	At stop
607D	Software absolute position limit									
	00	Highest subindexes supported	RO	NO	UINT8	-	-	2	-	-
	01	Min. position limit	RW	RPDO	INT32	User position unit	-2^{31} to ($+2^{31}$ – 1)	-2^{31}	During operation	At stop
	02	Max. position limit	RW	RPDO	INT32	User position unit	-2^{31} to ($+2^{31}$ – 1)	2^{31} – 1	During operation	At stop

Index	Sub-index	Name	Access	PDO Mapping	Data Format	Unit	Value Range	Default	Change Mode	Effective Time
607E	00	Polarity	RW	RPDO	UINT8	-	00 to FF	00	During operation	At stop
607F	00	Max. speed	RW	RPDO	UDINT32	Reference unit/s	0 to (2^{32} – 1)	2^{30}	During operation	At stop
6081	00	Profile velocity	RW	RPDO	UDINT32	User speed unit	0 to (2^{32} – 1)	0	During operation	At stop
6083	00	Profile acceleration	RW	RPDO	UDINT32	Reference unit/s^2	0 to (2^{32} – 1)	100	During operation	At stop
6084	00	Profile deceleration	RW	RPDO	UDINT32	Reference unit/s^2	0 to (2^{32} – 1)	100	During operation	At stop
6085	00	Deceleration rate for quick stop	RW	RPDO	UDINT32	User acceleration unit	0 to (2^{32} – 1)	100	During operation	At stop
6086	00	Motion profile type	RW	RPDO	INT16	-	-2^{15} to ($+2^{15}$ – 1)	0	During operation	At stop
6087	00	Torque slope	RW	RPDO	UDINT32	0.1%/s	0 to (2^{32} – 1)	2^{32} – 1	During operation	At stop
6091	Gear ratio									
	00	Highest subindexes supported	RO	NO	UINT8	Uint8	-	2	-	-
	01	Motor revolutions	RW	RPDO	UINT32	-	0 to (2^{32} – 1)	1	During operation	At stop
	02	Shaft revolutions	RW	RPDO	UINT32	-	1 to (2^{32} – 1)	1	During operation	At stop
6098	00	Homing method	RW	RPDO	INT8	-	1 to 35	1	During operation	At stop
6099	00	Number of sub-indexes for homing speed	RO	NO	Uint8	-	2	2	-	-
	01	High speed value of searching for the deceleration point signal	RW	RPDO	UINT32	Reference unit/s	0 to (2^{32} – 1)	100	During operation	At stop
	02	Speed during search for zero	RW	RPDO	UINT32	Reference unit/s	10 to (2^{32} – 1)	100	During operation	At stop
609A	00	Homing acceleration	RW	RPDO	UDINT32	Reference unit/s^2	0 to (2^{32} – 1)	100	During operation	At stop
60B0h	00	Position offset	RW	RPDO	INT32	Reference unit	-2^{31} to ($+2^{31}$ – 1)	0	During operation	At stop
60B1h	00	Velocity offset	RW	RPDO	INT32	Reference unit/s	-2^{31} to ($+2^{31}$ – 1)	0	During operation	At stop
60B2h	00	Torque offset	RW	RPDO	INT32	0.1%	–5000 to +5000	0	During operation	At stop
60B8h	00	Touch probe function	RW	RPDO	UINT16	-	0 to 65535	0	During operation	At stop
60B9h	00	Touch probe status	RW	RPDO	UINT16	-	0 to 65535	0	-	-
60BAh	00	Touch probe 1 positive edge	RW	RPDO	INT32	Reference unit	-2^{31} to ($+2^{31}$ – 1)	0	-	-
60BBh	00	Touch probe 1 negative edge	RW	RPDO	INT32	Reference unit	-2^{31} to ($+2^{31}$ – 1)	0	-	-
60BCh	00	Touch probe 2 positive edge	RW	RPDO	INT32	Reference unit	-2^{31} to ($+2^{31}$ – 1)	0	-	-
60BDh	00	Touch probe 2 negative edge	RW	RPDO	INT32	Reference unit	-2^{31} to ($+2^{31}$ – 1)	0	-	-
60E0h	00	Forward torque limit	RW	RPDO	UINT16	0.1%	0 to 5000	5000	During operation	At stop
60E1h	00	Reverse torque limit	RW	RPDO	UINT16	0.1%	0 to 5000	5000	During operation	At stop

Index	Sub-index	Name	Access	PDO Mapping	Data Format	Unit	Value Range	Default	Change Mode	Effective Time
60E3h	Supported homing method									
	00	Highest sub-indexes supported	RO	NO	UINT8	-	-	31	-	-
	01	1st supported homing method	RO	NO	UINT16	-	-	0301h	-	-
	02	2nd supported homing method	RO	NO	UINT16	-	-	0302h	-	-
	03	3rd supported homing method	RO	NO	UINT16	-	-	0303h	-	-
	04	4th supported homing method	RO	NO	UINT16	-	-	0304h	-	-
	05	5th supported homing method	RO	NO	UINT16	-	-	0305h	-	-
	06	6th supported homing method	RO	NO	UINT16	-	-	0306h	-	-
	07	7th supported homing method	RO	NO	UINT16	-	-	0307h	-	-
	08	8th supported homing method	RO	NO	UINT16	-	-	0308h	-	-
	09	9th supported homing method	RO	NO	UINT16	-	-	0309h	-	-
	0A	10th supported homing method	RO	NO	UINT16	-	-	030Ah	-	-
	0B	11th supported homing method	RO	NO	UINT16	-	-	030Bh	-	-
	0C	12th supported homing method	RO	NO	UINT16	-	-	030Ch	-	-
	0D	13th supported homing method	RO	NO	UINT16	-	-	030Dh	-	-
	0E	14th supported homing method	RO	NO	UINT16	-	-	030Eh	-	-
	0F	15th supported homing method	RO	NO	UINT16	-	-	030Fh	-	-
	10	16th supported homing method	RO	NO	UINT16	-	-	0310h	-	-
	11	17th supported homing method	RO	NO	UINT16	-	-	0311h	-	-
	12	18th supported homing method	RO	NO	UINT16	-	-	0312h	-	-
	13	19th supported homing method	RO	NO	UINT16	-	-	0313h	-	-
	14	20th supported homing method	RO	NO	UINT16	-	-	0314h	-	-
	15	21st supported homing method	RO	NO	UINT16	-	-	0315h	-	-
	16	22nd supported homing method	RO	NO	UINT16	-	-	0316h	-	-
	17	23rd supported homing method	RO	NO	UINT16	-	-	0317h	-	-
	18	24th supported homing method	RO	NO	UINT16	-	-	0318h	-	-
	19	25th supported homing method	RO	NO	UINT16	-	-	0319h	-	-
	1A	26th supported homing method	RO	NO	UINT16	-	-	031Ah	-	-
	1B	27th supported homing method	RO	NO	UINT16	-	-	031Bh	-	-
	1C	28th supported homing method	RO	NO	UINT16	-	-	031Ch	-	-
	1D	29th supported homing method	RO	NO	UINT16	-	-	031Dh	-	-
	1E	30th supported homing method	RO	NO	UINT16	-	-	031Eh	-	-
	1F	31st supported homing method	RO	NO	UINT16	-	-	031Fh	-	-

Index	Sub-index	Name	Access	PDO Mapping	Data Format	Unit	Value Range	Default	Change Mode	Effective Time
60E6h	00	Encoder increments for the additional position	RW	NO	UINT16	-	0-1	0	During operation	At stop
60F4h	00	Position deviation	RO	RPDO	DINT32	Reference unit	-	-	-	-
60FCh	00	Position reference	RO	TPDO	DINT32	Encoder unit	-	-	-	-
60FDh	00	DI status	RO	RPDO	UDINT32	-	0 to FFFFFFFF	0	-	-
60FEh	Digital output									
	00	DO status	RO	NO	UINT8	-	-	1	-	-
	01	Physical output	RW	RPDO	INT32	-	0 to FFFFFFFF	0	During operation	At stop
	02	Output mask	RW	NO	INT32	-	0 to FFFFFFFF	0	During operation	At stop
60FFh	00	Target speed	RW	RPDO	INT32	Reference unit/s	-2^{31} to $(+2^{31}-1)$	0	During operation	At stop
6502h	00	Supported drive modes	RO	NO	UDINT32	-	-	3A1h	-	-

10.2 Group H00: Servo Motor Parameters

Para.	Name	Value Range	Unit	Default	Effective Time	Setting Condition	Related Mode
H00-00	Motor SN	14000: Inovance motor with 20-bit incremental encoder 14101: Inovance motor with 23-bit absolute encoder	-	14000	Next power-on	At stop	ALL
H00-02	Customized No.	-	-	-	-	At display	-
H00-04	Encoder version	-	-	-	-	At display	-
H00-05	Serial encoder motor SN	-	-	-	-	At display	-
H00-08	Absolute encoder type	14100: Multi-turn absolute encoder Others: Single-turn absolute encoder	-	-	Next power-on	At stop	ALL
H00-09	Rated voltage	0 to 220 1 to 380	V	-	Next power-on	At stop	-
H00-10	Rated power	0.01 to 655.35	kW	-	Next power-on	At stop	-
H00-11	Rated current	0.01 to 655.35	A	-	Next power-on	At stop	-
H00-12	Rated torque	0.01 to 655.35	N·m	-	Next power-on	At stop	-
H00-13	Max. torque	0.10 to 655.35	N·m	-	Next power-on	At stop	-
H00-14	Rated speed	100 to 6000	RPM	-	Next power-on	At stop	-
H00-15	Max. speed	100 to 6000	RPM	-	Next power-on	At stop	-
H00-16	Moment of inertia Jm	0.01 to 655.35	$kgcm^2$	-	Next power-on	At stop	-
H00-17	Number of PMSM pole pairs	2 to 360	Pole pair	-	Next power-on	At stop	-
H00-18	Stator resistance	0.001 to 65.535	Ω	-	Next power-on	At stop	-
H00-19	Stator inductance Lq	0.01 to 655.35	mH	-	Next power-on	At stop	-
H00-20	Stator inductance Ld	0.01 to 655.35	mH	-	Next power-on	At stop	-
H00-21	Linear back EMF coefficient	0.01 to 655.35	mV/rpm	-	Next power-on	At stop	-
H00-22	Torque coefficient Kt	0.01 to 655.35	N·m/Arms	-	Next power-on	At stop	-
H00-23	Electrical constant Te	0.01 to 655.35	ms	-	Next power-on	At stop	-
H00-24	Mechanical constant Tm	0.01 to 655.35	ms	-	Next power-on	At stop	-
H00-28	Absolute encoder position offset	0 to 1073741824	P/r	-	Next power-on	At stop	-

Para.	Name	Value Range	Unit	Default	Effective Time	Setting Condition	Related Mode
H00-30	Encoder selection (Hex)	0x000: Common incremental encoder 0x013: Inovance 20-bit or 23-bit serial encoder	1	0x013	Next power-on	At stop	-
H00-31	Encoder PPR	0 to 1073741824	P/r	1048576	Next power-on	At stop	-
H00-33	Electrical angle corresponding to Z signal	0.0 to 360	°	180	Next power-on	At stop	-
H00-34	Electrical angle of phase U rising edge	0.0 to 360	°	180	Next power-on	At stop	-

10.3 Group H01: Servo Drive Parameters

Para.	Name	Value Range	Unit	Default	Effective Time	Setting Condition	Related Mode
H01-00	MCU software version	0 to 65535	-	-	-	At display	-
H01-01	FPGA software version	0 to 65535	-	-	-	At display	-
H01-02	Servo drive SN	0 to 65535	-	-	Next power-on	At stop	-

10.4 Group H02: Basic Control Parameters

Para.	Name	Value Range	Unit	Default	Effective Time	Setting Condition	Related Mode
H02-00	Control mode	0: Speed mode 1: Position mode 2: Torque mode 3: Torque mode ↔ Speed mode 4: Speed mode ↔ Position mode 5: Torque mode ↔ Position mode 6: Torque mode ↔ Speed mode ↔ Position mode 8: CANopen control mode (applicable to -CO models only)	-	1	Immediately	At stop	-
H02-01	Absolute system selection	0: Incremental position mode 1: Absolute position linear mode 2: Absolute position rotation mode	-	0	Next power-on	At stop	ALL

Para.	Name	Value Range	Unit	Default	Effective Time	Setting Condition	Related Mode
H02-02	Rotation direction selection	0: CCW direction as forward direction (Phase A leads phase B) 1: CW direction as forward direction (reverse rotation. Phase A lags behind phase B)	-	0	Next power-on	At stop	PST
H02-03	Output pulse phase	0: CCW direction as forward direction (Phase A leads phase B) 1: CW direction as forward direction (reverse rotation. Phase A lags behind phase B)	-	0	Next power-on	At stop	PST
H02-05	Stop mode at S-ON OFF	0: Coast to stop, keeping de-energized state 1: Stop at zero speed, keeping de-energized state	-	0	Immediately	At stop	PST
H02-06	Stop mode at No.2 fault	0: Coast to stop, keeping de-energized state 1: Stop at zero speed, keeping de-energized state	-	0	Immediately	At stop	PST
H02-07	Stop mode at overtravel	0: Coast to stop, keeping de-energized state 1: Stop at zero speed, keeping position lock state 2: Stop at zero speed, keeping de-energized state	-	1	Immediately	At stop	PST
H02-08	Stop mode at No.1 fault	0: Coast to stop, keeping de-energized state	-	0	Immediately	At stop	PST
H02-09	Delay from brake output ON to command received	0 to 500	ms	250	Immediately	During operation	PS
H02-10	Delay from brake output OFF to motor de-energized in static state	1 to 1000	ms	150	Immediately	During operation	PS
H02-11	Motor speed threshold at brake output OFF in rotating state	0 to 3000	RPM	30	Immediately	During operation	PS
H02-12	Delay from S-ON OFF to brake output OFF in rotating state	1 to 1000	ms	500	Immediately	During operation	PS
H02-15	Warning display on the keypad	0: Output warning information immediately 1: Not output warning information	-	0	Immediately	At stop	PST
H02-18	Servo ON Filter time constant	0 to 64	ms	0	Immediately	At stop	PST

Para.	Name	Value Range	Unit	Default	Effective Time	Setting Condition	Related Mode
H02-30	User password	0 to 65535	-	0	Next power-on	At stop	PST
H02-31	System parameter initialization	0: No operation 1: Restore default settings (parameters in groups H00 and H01 excluded) 2: Clear fault records	-	0	Immediately	At stop	PST
H02-32	Default keypad display	0 to 99	-	50	Immediately	During operation	-
H02-33	EtherCAT software version	-	-	-	-	At display	-
H02-34	CAN software version	-	-	-	-	At display	-
H02-38	Braking time at short circuit	0 to 30000	ms	5000	Immediately	During operation	PST
H02-39	Max. braking current at short circuit	0 to 3000	0.1%	1000	Immediately	During operation	PST

10.5 Group H03: Terminal Input Parameters

Para.	Name	Value Range	Unit	Default	Effective Time	Setting Condition	Related Mode
H03-00	DI function allocation 1 (activated upon power-on)	0 to 0xFFFF Bit0: FunIN.1 Bit1: FunIN.2 … Bit15: FunIN.16	-	0	Next power-on	During operation	-
H03-01	DI function allocation 2 (activated upon power-on)	0 to 0xFFFF Bit0: FunIN.17 Bit1: FunIN.18 ... Bit15: FunIN.32	-	0	Next power-on	During operation	-
H03-02	DI1 function selection	0 to 37	-	14	At stop	During operation	-
H03-03	DI1 logic selection	Input polarity: 0 to 4 0: Active low 1: Active high 2: Rising edge valid 3: Falling edge valid 4: Both rising edge and falling edge valid	-	0	At stop	During operation	-
H03-04	DI2 function selection	0 to 37	-	15	At stop	During operation	-

Para.	Name	Value Range	Unit	De-fault	Effective Time	Setting Condition	Related Mode
H03-05	DI2 logic selection	Input polarity: 0 to 4 0: Active low 1: Active high 2: Rising edge valid 3: Falling edge valid 4: Both rising edge and falling edge valid	-	0	At stop	During operation	-
H03-06	DI3 function selection	0 to 37	-	13	At stop	During operation	-
H03-07	DI3 logic selection	Input polarity: 0 to 4 0: Active low 1: Active high 2: Rising edge valid 3: Falling edge valid 4: Both rising edge and falling edge valid	-	0	At stop	During operation	-
H03-08	DI4 function selection	0 to 37	-	2	At stop	During operation	-
H03-09	DI4 logic selection	Input polarity: 0 to 4 0: Active low 1: Active high 2: Rising edge valid 3: Falling edge valid 4: Both rising edge and falling edge valid	-	0	At stop	During operation	-
H03-10	DI5 function selection	0 to 37	-	1	At stop	During operation	-
H03-11	DI5 logic selection	Input polarity: 0 to 4 0: Active low 1: Active high 2: Rising edge valid 3: Falling edge valid 4: Both rising edge and falling edge valid	-	0	At stop	During operation	-
H03-12	DI6 function selection	0 to 37	-	12	At stop	During operation	-
H03-13	DI6 logic selection	Input polarity: 0 to 4 0: Active low 1: Active high 2: Rising edge valid 3: Falling edge valid 4: Both rising edge and falling edge valid	-	0	At stop	During operation	-
H03-14	DI7 function selection	0 to 37	-	3	At stop	During operation	-

Para.	Name	Value Range	Unit	De-fault	Effective Time	Setting Condition	Related Mode
H03-15	DI7 logic selection	Input polarity: 0 to 4 0: Active low 1: Active high 2: Rising edge valid 3: Falling edge valid 4: Both rising edge and falling edge valid	-	0	At stop	During operation	-
H03-16	DI8 function selection	0 to 37	-	31	At stop	During operation	-
H03-17	DI8 logic selection	Input polarity: 0 to 4 0: Active low 1: Active high 2: Rising edge valid 3: Falling edge valid 4: Both rising edge and falling edge valid	-	0	At stop	During operation	-
H03-18	DI9 function selection	0 to 37	-	0	At stop	During operation	-
H03-19	DI9 logic selection	Input polarity: 0 to 4 0: Active low 1: Active high 2: Rising edge valid 3: Falling edge valid 4: Both rising edge and falling edge valid	-	0	At stop	During operation	-
H03-34	DI function allocation 3 (activated upon power-on)	0 to 0xFFFF Bit0: FunIN.33 Bit1: FunIN.34 ... Bit15: FunIN.48	-	0	Next power-on	During operation	-
H03-35	DI function allocation 4 (activated upon power-on)	0 to 0xFFFF Bit0: FunIN.49 Bit1: FunIN.50 ... Bit15: FunIN.64	-	0	Next power-on	During operation	-
H03-50	AI1 offset	–5000 to +5000	mV	0	Immediately	During operation	-
H03-51	AI1 input filter time Constant	0 to 655.35	ms	2.00	Immediately	During operation	-
H03-53	AI1 dead zone	0 to 1000.0	mV	10.0	Immediately	During operation	-
H03-54	AI1 zero drift	–500.0 to +500.0	mV	0.0	Immediately	During operation	-
H03-55	AI2 offset	–5000 to +5000	mV	0	Immediately	During operation	-
H03-56	AI2 input filter time Constant	0 to 655.35	ms	2.00	Immediately	During operation	-

Para.	Name	Value Range	Unit	De-fault	Effective Time	Setting Condition	Related Mode
H03-58	AI2 dead zone	0 to 1000.0	mV	10.0	Immedi-ately	During operation	-
H03-59	AI2 zero drift	–500.0 to +500.0	mV	0.0	Immedi-ately	During operation	-
H03-80	Speed corresponding to 10 V	0 RPM to 9000 RPM	1 RPM	3000 RPM	Immedi-ately	At stop	-
H03-81	Torque corresponding to 10 V	1.00 to 8.00 times of rated torque	1.00 Rated torque	1.00 Rated torque	Immedi-ately	At stop	-

10.6 Group H04: Terminal Output Parameters

Para.	Name	Value Range	Unit	De-fault	Effective Time	Setting Condition	Related Mode
H04-00	DO1 function selection	0 to 22	-	1	At stop	During oper-ation	-
H04-01	DO1 logic selection	Output polarity rever-sal: 0 and 1 0: Output low level (L) when valid (optocoupler ON) 1: Output high level (H) when valid (optocoupler OFF)	-	0	At stop	During oper-ation	-
H04-02	DO2 function selection	0 to 22	-	5	At stop	During oper-ation	-
H04-03	DO2 logic selection	Output polarity rever-sal: 0 and 1 0: Output low level (L) when valid (optocoupler ON) 1: Output high level (H) when valid (optocoupler OFF)	-	0	At stop	During oper-ation	-
H04-04	DO3 function selection	0 to 22	-	3	At stop	During oper-ation	-
H04-05	DO3 logic selection	Output polarity rever-sal: 0 and 1 0: Output low level (L) when valid (optocoupler ON) 1: Output high level (H) when valid (optocoupler OFF)	-	0	At stop	During oper-ation	-
H04-06	DO4 function selection	0 to 22	-	11	At stop	During oper-ation	-

Para.	Name	Value Range	Unit	De-fault	Effective Time	Setting Condition	Related Mode
H04-07	DO4 logic selection	Output polarity reversal: 0 and 1 0: Output low level (L) when valid (optocoupler ON) 1: Output high level (H) when valid (optocoupler OFF)	-	0	At stop	During operation	-
H04-08	DO5 function selection	0 to 22	-	16	At stop	During operation	-
H04-09	DO5 logic selection	Output polarity reversal: 0 and 1 0: Output low level (L) when valid (optocoupler ON) 1: Output high level (H) when valid (optocoupler OFF)	-	0	At stop	During operation	-
H04-22	DO source selection	0 to 31	-	0	Immediately	At stop	-
H04-50	AO1 signal source	00: Motor speed (1 V/1000 RPM) 01: Speed reference (1V /1000 RPM) 02: Torque reference (1 V/100%) 03: Position deviation (0.05 V/reference unit) 04: Position deviation (0.05 V/encoder unit) 05: Position reference speed (1 V/1000 RPM) 06: Positioning completed (Positioning completed: 5 V positioning not completed: 0 V) 07: Speed feedforward (1 V/1000 RPM) 08: AI1 voltage 09: AI2 voltage	-	0	Immediately	During operation	-
H04-51	AO1 offset voltage	–10000 to +10000	mV	5000	Immediately	During operation	-
H04-52	AO1 multiplying factor	–99.99 to +99.99	Multiple	1.00	Immediately	During operation	-

Para.	Name	Value Range	Unit	De-fault	Effective Time	Setting Condition	Related Mode
H04-53	AO2 signal source	00: Motor speed (1 V/1000 RPM) 01: Speed reference (1V /1000 RPM) 02: Torque reference (1 V/100%) 03: Position deviation (0.05 V/reference unit) 04: Position deviation (0.05 V/encoder unit) 05: Position reference speed (1 V/1000 RPM) 06: Positioning completed (Positioning completed: 5 V positioning not completed: 0 V) 07: Speed feedforward (1 V/1000 RPM) 08: AI1 voltage 09: AI2 voltage	-	0	Immediately	During operation	-
H04-54	AO2 offset voltage	–10000 to +10000	mV	5000	Immediately	During operation	-
H04-55	AO2 multiplying factor	–99.99 to +99.99	Multiple	1.00	Immediately	During operation	-

10.7 Group H05: Position Control Parameters

Para.	Name	Value Range	Unit	Default	Effective Time	Setting Condition	Related Mode
H05-00	Position reference source	0: Pulse reference 1: Step 2: Multi-position reference	-	0	Immediately	At stop	P
H05-01	Pulse reference input terminal selection	0: Low speed 1: High speed	-	0	Immediately	At stop	P
H05-02	Pulses per revolution	0 to 1048576	P/r	0	Next power-on	At stop	P
H05-04	First-order low-pass filter time constant	0 to 6553.5	ms	0.0	Immediately	At stop	P
H05-05	Step	–9999 to +9999	Reference unit	50	Immediately	At stop	P
H05-06	Moving average filter time constant	0.0 to 128.0	ms	0.0	Immediately	At stop	P
H05-07	Electronic gear ratio 1 (numerator)	1 to 1073741824	-	1048576	Immediately	During operation	P
H05-09	Electronic gear ratio 1 (denominator)	1 to 1073741824	-	10000	Immediately	During operation	P

Para.	Name	Value Range	Unit	Default	Effective Time	Setting Condition	Related Mode
H05-11	Electronic gear ratio 2 (numerator)	1 to 1073741824	-	1048576	Immediately	During operation	P
H05-13	Electronic gear ratio 2 (denominator)	1 to 1073741824	-	10000	Immediately	During operation	P
H05-15	Pulse reference form	0: Direction + Pulse, positive logic 1: Direction + Pulse, negative logic 2: Phase A + phase B quadrature pulse, 4-frequency multiplication 3: CW + CCW	-	0	Next power-on	At stop	P
H05-16	Clear action	0: Clear position deviation when S-ON is switched off or when a fault occurs 1: Clear position deviation pulses when S-ON is switched off or when a fault occurs 2: Clear position deviation when S-ON is switched off or when ClrPosErr signal is input from DI	-	0	Immediately	At stop	P
H05-17	Number of encoder frequency-division pulses	35 to 32767	P/r	2500	Next power-on	At stop	-
H05-19	Speed feedforward control	0: No speed feedforward 1: Internal 2: AI1 3: AI2	-	1	Immediately	At stop	P
H05-20	Condition for positioning completed signal output	0: The absolute value of position deviation is smaller than the value of H05-21 1: The absolute value of position deviation is smaller than the value of H05-21 and the position reference after filtering is 0 2: The absolute value of position deviation is smaller than the value of H05-21 and the position reference before filtering is 0 3: The absolute value of position deviation is smaller than the value of H05-21/H05-22 and the position reference is 0, and the positioning completed/near signal is hold for the time set in H05-60	-	0	Immediately	During operation	P

Para.	Name	Value Range	Unit	Default	Effective Time	Setting Condition	Related Mode
H05-21	Positioning completed threshold	1 to 65535	Encoder/Reference unit	734	Immediately	During operation	P
H05-22	Positioning near threshold	1 to 65535	Encoder/Reference unit	65535	Immediately	During operation	P
H05-23	Interrupt positioning selection	0: Disabled 1: Enabled	-	0	Next power-on	At stop	P
H05-24	Displacement of interrupt positioning	0 to 1073741824	Reference unit	10000	Immediately	During operation	P
H05-26	Constant running speed at interrupt positioning	0 to 6000	RPM	200	Immediately	During operation	P
H05-27	Acceleration/Deceleration time of interrupt positioning	0 to 1000	ms	10	Immediately	During operation	P
H05-29	Interrupt positioning cancellation signal selection	0: Disabled 1: Enabled	-	1	Immediately	During operation	P
H05-30	Homing selection	0: Disable homing 1: Enable homing through HomingStart signal input from DI 2: Enable electrical homing through HomingStart signal input from DI 3: Start homing immediately upon power-on 4: Perform homing immediately 5: Start electrical homing 6: Current position as home	-	0	Immediately	During operation	P

Para.	Name	Value Range	Unit	Default	Effective Time	Setting Condition	Related Mode
H05-31	Homing mode	0: Forward homing, deceleration point and home being positive limit switch 1: Reverse homing, deceleration point and home being home switch 2: Forward homing, deceleration point and home being motor Z signal 3: Reverse homing, deceleration point and home being motor Z signal 4: Forward homing, deceleration point being home switch and home being motor Z signal 5: Reverse homing, deceleration point being home switch and home being moor Z signal 6: Forward homing, deceleration point and home being positive limit switch 7: Reverse homing, deceleration point and home being negative limit switch 8: Forward homing, deceleration point being positive limit switch and home being motor Z signal 9: Reverse homing, deceleration point being negative limit switch and home being motor Z signal 10: Forward homing, deceleration point and home being mechanical final limit position 11: Reverse homing, deceleration point and home being mechanical final limit position 12: Forward homing, deceleration point being mechanical final limit position and home being motor Z signal 13: Reverse homing, deceleration point being mechanical final limit position and home being motor Z signal	-	0	Immediately	At stop	P
H05-32	Speed of high-speed homing	0 to 3000	RPM	100	Immediately	During operation	P
H05-33	Speed of low-speed homing	0 to 1000	RPM	10	Immediately	During operation	P
H05-34	Acceleration/ Deceleration time during homing	0 to 1000	ms	1000	Immediately	At stop	P
H05-35	Duration limit of homing	0 to 65535	ms	10000	Immediately	At stop	P

Para.	Name	Value Range	Unit	Default	Effective Time	Setting Condition	Related Mode
H05-36	Offset of mechanical home	–1073741824 to +1073741824	Reference unit	0	Immediately	At stop	P
H05-38	Servo pulse output source	0: Encoder frequency-division output 1: Pulse reference synchronous output 2: Frequency-division or synchronous output inhibited	-	0	Next power-on	At stop	P
H05-39	Electronic gear ratio switchover condition	0: Switchover after position reference (reference unit) is kept 0 for 2.5 ms 1: Switchover in real time	-	0	Immediately	At stop	P
H05-40	Mechanical home offset and action upon active limit signal	0: H05-36 as the coordinate after homing, reverse homing applied after homing triggered again upon active limit signal 1: H05-36 as the relative offset after homing, reverse homing applied after homing triggered again upon active limit signal 2: H05-36 as the coordinate after homing, reverse homing applied automatically upon active limit signal 3: H05-36 as the relative offset after homing, reverse homing applied automatically upon active limit signal	-	0	Immediately	At stop	P
H05-41	Z pulse output polarity	0: Positive (pulse Z being high level) 1: Negative (pulse Z being low level)	-	1	Next power-on	At stop	P
H05-43	Position pulse edge	0: Falling edge valid 1: Rising edge valid	1	0	Next power-on	During operation	PST
H05-46	Position offset in absolute position linear mode (low 32 bits)	–2147483648 to +2147483647	Encoder unit	0	Next power-on	At stop	PST
H05-48	Position offset in absolute position linear mode (high 32 bits)	–2147483648 to +2147483647	Encoder unit	0	Next power-on	At stop	PST
H05-50	Mechanical gear ratio in absolute position rotation mode (numerator)	1 to 65535	1	65535	Immediately	At stop	ALL

Para.	Name	Value Range	Unit	Default	Effective Time	Setting Condition	Related Mode
H05-51	Mechanical gear ratio in absolute position rotation mode (denominator)	1 to 65535	1	1	Immediately	At stop	ALL
H05-52	Pulses per load revolution in absolute position rotation mode (low 32 bits)	0 to 4294967295	Encoder unit	0	Immediately	At stop	ALL
H05-54	Pulses per load revolution in absolute position rotation mode (high 32 bits)	0 to 127	Encoder Unit	0	Immediately	At stop	ALL
H05-56	Speed threshold of homing upon hit-and-stop	0 to 1000	RPM	2	Immediately	During operation	P
H05-58	Torque limit of homing upon hit-and-stop	0 to 300.0	%	100.0%	Immediately	During operation	P
H05-59	Window time of positioning completed	0 to 30000	ms	1	Immediately	During operation	P
H05-60	Holding time of positioning completed	0 to 30000	ms	1	Immediately	During operation	P
H05-61	Number of encoder frequency-division pulses (32-bit)	0 to 262143	P/r	0	Next power-on	At stop	-

10.8 Group H06: Speed Control Parameters

Para.	Name	Value Range	Unit	Default	Effective Time	Setting Condition	Related Mode
H06-00	Source of main speed reference A	0: Digital setting (H06-03) 1: AI1 2: AI2	-	0	Immediately	At stop	S
H06-01	Source of auxiliary speed reference B	0: Digital setting (H06-03) 1: AI1 2: AI2 3: 0 (invalid) 4: 0 (invalid) 5: Multi-speed reference	-	1	Immediately	At stop	S
H06-02	Speed reference source	0: Source of main speed reference A 1: Source of auxiliary speed reference B 2: A + B 3: A/B switchover 4: Communication	-	0	Immediately	At stop	S

Para.	Name	Value Range	Unit	Default	Effective Time	Setting Condition	Related Mode
H06-03	Speed reference value set through keypad	–6000 to +6000	RPM	200	Immediately	During operation	S
H06-04	Jog speed reference value	0 to 6000	RPM	100	Immediately	During operation	S
H06-05	Acceleration ramp time constant of speed reference	0 to 65535	ms	0	Immediately	During operation	S
H06-06	Deceleration ramp time constant of speed reference	0 to 65535	ms	0	Immediately	During operation	S
H06-07	Max. speed limit	0 to 6000	RPM	6000	Immediately	During operation	S
H06-08	Positive speed limit	0 to 6000	RPM	6000	Immediately	During operation	S
H06-09	Negative speed limit	0 to 6000	RPM	6000	Immediately	During operation	S
H06-11	Torque feedforward control	0: No torque feedforward 1: Internal torque feedforward	-	1	Immediately	During operation	PS
H06-15	Zero clamp speed threshold	0 to 6000	RPM	10	Immediately	During operation	S
H06-16	Motor speed threshold	0 to 1000	RPM	20	Immediately	During operation	S
H06-17	Threshold of speed matching signal	0 to 100	RPM	10	Immediately	During operation	S
H06-18	Threshold of speed reached signal	10 to 6000	RPM	1000	Immediately	During operation	S
H06-19	Threshold of zero speed output signal	1 to 6000	RPM	10	Immediately	During operation	S

10.9 Group H07: Torque Control Parameters

The torque reference 100% corresponds to the rated motor torque.

Para.	Name	Value Range	Unit	Default	Effective Time	Setting Condition	Related Mode
H07-00	Source of main torque reference A	0: Digital setting (H07-03) 1: AI1 2: AI2	-	0	Immediately	At stop	T
H07-01	Source of auxiliary torque reference B	0: Digital setting (H07-03) 1: AI1 2: AI2	-	1	Immediately	At stop	T
H07-02	Torque reference source	0: Source of main torque reference A 1: Source of auxiliary torque reference B 2: A + B 3: A/B switchover 4: Communication	-	0	Immediately	At stop	T
H07-03	Torque reference set through keypad	–300.0 to +300.0	%	0	Immediately	During operation	T
H07-05	Torque reference filter time constant	0 to 30.00	ms	0.79	Immediately	During operation	PST

Para.	Name	Value Range	Unit	De-fault	Effective Time	Setting Condition	Related Mode
H07-06	2nd torque reference filter time constant	0 to 30.00	ms	0.79	Immedi-ately	During operation	PST
H07-07	Torque limit source	0: Forward/Reverse internal torque limit 1: Forward/Reverse external torque limit (selected through P-CL and N-CL) 2: T-LMT as external torque limit 3: Smaller of forward/reverse external torque limit and T-LMT as external torque limit (selected through P-CL and N-CL) 4: Switchover between forward/reverse internal torque limit and T-LMT torque limit (selected through P-CL and N-CL)	-	0	Immedi-ately	At stop	PST
H07-08	T-LMT selection	1: AI1 2: AI2	-	2	Immedi-ately	At stop	PST
H07-09	Forward internal torque limit	0.0 to 300.0	%	300.0	Immedi-ately	During operation	PST
H07-10	Reverse internal torque limit	0.0 to 300.0	%	300.0	Immedi-ately	During operation	PST
H07-11	Forward external torque limit	0.0 to 300.0	%	300.0	Immedi-ately	During operation	PST
H07-12	Reverse external torque limit	0.0 to 300.0	%	300.0	Immedi-ately	During operation	PST
H07-17	Speed limit source	0: Internal speed limit (in the torque control mode) 1: V-LMT as external speed limit 2: Internal speed limit selected between H07-19 and H07-20 through FunIN.36 (V-SEL)	-	0	Immedi-ately	During operation	T
H07-18	V-LMT selection	1: AI1 2: AI2	-	1	Immedi-ately	During operation	T
H07-19	Positive speed limit/ Speed limit 1 in the torque control mode	0 to 6000	RPM	3000	Immedi-ately	During operation	T
H07-20	Negative speed limit/ Speed limit 2 in the torque control mode	0 to 6000	RPM	3000	Immedi-ately	During operation	T
H07-21	Base value for torque reached	0.0 to 300.0	%	0.0	Immedi-ately	During operation	PST
H07-22	Valid value for torque reached	0.0 to 300.0	%	20.0	Immedi-ately	During operation	PST

Para.	Name	Value Range	Unit	Default	Effective Time	Setting Condition	Related Mode
H07-23	Invalid value for torque reached	0.0 to 300.0	%	10.0	Immediately	During operation	PST
H07-40	Speed limit window in torque control	0.5 to 30.0	ms	1.0	Immediately	During operation	T

10.10 Group H08: Gain Parameters

Para.	Name	Value Range	Unit	Default	Effective Time	Setting Condition	Related Mode
H08-00	Speed loop gain	0.1 to 2000.0	Hz	25.0	Immediately	During operation	PS
H08-01	Speed loop integral time constant	0.15 to 512.00	ms	31.83	Immediately	During operation	PS
H08-02	Position loop gain	0.0 to 2000.0	Hz	40.0	Immediately	During operation	P
H08-03	2nd speed loop gain	0.1 to 2000.0	Hz	40.0	Immediately	During operation	PS
H08-04	2nd speed loop integral time constant	0.15 to 512.00	ms	40.00	Immediately	During operation	PS
H08-05	2nd position loop gain	0.0 to 2000.0	Hz	64.0	Immediately	During operation	P
H08-08	2nd gain mode setting	0: Fixed at 1st gain, P/PI switchover through external DI 1: Gain switchover based on the condition defined by H08-09	-	1	Immediately	During operation	PST
H08-09	Gain switchover condition	0: Fixed at 1st gain (PS) 1: Switchover through external DI (PS) 2: Large torque reference (PS) 3: Large speed reference (PS) 4: Large speed reference change rate (PS) 5: Speed reference high/low-speed threshold (PS) 6: Large position deviation (P) 7: Position reference available (P) 8: Positioning completed (P) 9: Large actual motor speed (P) 10: Position reference + Actual speed (P)	-	0	Immediately	During operation	PST
H08-10	Gain switchover delay	0.0 to 1000.0	ms	5.0	Immediately	During operation	PST

Para.	Name	Value Range	Unit	Default	Effective Time	Setting Condition	Related Mode
H08-11	Gain switchover level	0 to 20000	Based on the switchover condition	50	Immediately	During operation	PST
H08-12	Gain switchover dead time	0 to 20000	Based on the switchover condition	30	Immediately	During operation	PST
H08-13	Position gain switchover time	0.0 to 1000.0	ms	3.0	Immediately	During operation	P
H08-15	Load moment of inertia ratio	0.00 to 120.00	Multiple	1.00	Immediately	During operation	PST
H08-18	Speed feedforward filter time constant	0.00 to 64.00	ms	0.50	Immediately	During operation	P
H08-19	Speed feedforward gain	0.0 to 100.0	%	0.0	Immediately	During operation	P
H08-20	Torque feedforward filter time constant	0.00 to 64.00	ms	0.50	Immediately	At stop	PS
H08-21	Torque feedforward gain	0.0 to 200.0	%	0.0	Immediately	During operation	PS
H08-22	Speed feedback filter option	0: Average filter on speed feedback inhibited 1: Two times of average filter on speed feedback 2: Four times of average filter on speed feedback 3: Eight times of average filter on speed feedback 4: Sixteen times of average filter on speed feedback	-	0	Immediately	At stop	PS
H08-23	Cutoff frequency of speed feedback low-pass filter	100 to 4000	Hz	4000	Immediately	During operation	PS
H08-24	PDFF control coefficient	0.0 to 100.0	-	100.0	Immediately	During operation	PS

10.11 Group H09: Automatic Gain Adjustment Parameters

Para.	Name	Value Range	Unit	Default	Effective Time	Setting Condition	Related Mode
H09-00	Automatic gain adjustment mode	0: Disabled, gain parameters adjusted manually 1: Gain parameters tuned automatically based on the rigidity meter 2: Positioning mode. Gain parameters are tuned automatically based on the rigidity meter setting	-	0	Immediately	During operation	PST
H09-01	Rigidity level	0 to 31	-	12	Immediately	During operation	PST
H09-02	Adaptive notch mode	0: Adaptive notch no longer updated 1: One adaptive notch (3rd notch) valid 2: Two adaptive notches (3rd and 4th notches) valid 3. Resonance point tested only, displayed in H09-24 4: Values of 3rd and 4th notches restored to default settings	-	0	Immediately	During operation	PST
H09-03	Online inertia auto-tuning mode	0: Online auto-tuning disabled 1: Online auto-tuning enabled, changing slowly 2: Online auto-tuning enabled, changing normally 3: Online auto-tuning enabled, changing quickly	-	0	Immediately	During operation	RST
H09-04	Low-frequency resonance suppression mode	0: Vibration frequency set manually 1: Vibration frequency set automatically	-	0	Immediately	During operation	P
H09-05	Offline inertia auto-tuning mode	0: Positive/Negative triangle wave mode 1: Jog mode	-	0	Immediately	At stop	PST
H09-06	Max. speed of inertia auto-tuning	100 to 1000	RPM	500	Immediately	At stop	PST
H09-07	Time constant for accelerating to the maximum speed during inertia auto-tuning	20 to 800	ms	125	Immediately	At stop	PST
H09-08	Inertia auto-tuning interval	50 to 10000	ms	800	Immediately	At stop	PST

Para.	Name	Value Range	Unit	Default	Effective Time	Setting Condition	Related Mode
H09-09	Number of motor revolutions per inertia auto-tuning	0.00 to 2.00	r	-	-	At display	PST
H09-12	Frequency of the 1st notch	50 to 4000	Hz	4000	Immediately	During operation	PS
H09-13	Width level of the 1st notch	0 to 20	-	2	Immediately	During operation	PS
H09-14	Depth level of the 1st notch	0 to 99	-	0	Immediately	During operation	PS
H09-15	Frequency of the 2nd notch	50 to 4000	Hz	4000	Immediately	During operation	PS
H09-16	Width level of the 2nd notch	0 to 20	-	2	Immediately	During operation	PS
H09-17	Depth level of the 2nd notch	0 to 99	-	0	Immediately	During operation	PS
H09-18	Frequency of the 3rd notch	50 to 4000	Hz	4000	Immediately	During operation	PS
H09-19	Width level of the 3rd notch	0 to 20	-	2	Immediately	During operation	PS
H09-20	Depth level of the 3rd notch	0 to 99	-	0	Immediately	During operation	PS
H09-21	Frequency of the 4th notch	50 to 4000	Hz	4000	Immediately	During operation	PS
H09-22	Width level of the 4th notch	0 to 20	-	2	Immediately	During operation	PS
H09-23	Depth level of the 4th notch	0 to 99	-	0	Immediately	During operation	PS
H09-24	Auto-tuned resonance frequency	0 to 2	Hz	0	-	At display	PS
H09-30	Torque disturbance compensation gain	0.0 to 100.0	%	0.0	Immediately	During operation	PS
H09-31	Filter time constant of torque disturbance observer	0.00 to 25.00	ms	0.50	Immediately	During operation	PS
H09-38	Low-frequency resonance frequency	1.0 to 100.0	Hz	100.0	Immediately	During operation	P
H09-39	Filter setting of low-frequency resonance frequency	0 to 10	-	2	Immediately	During operation	P

10.12 Group H0A: Fault and Protection Parameters

Para.	Name	Value Range	Unit	Default	Effective Time	Setting Condition	Related Mode
H0A-03	Retentive upon power failure	0: Disabled 1: Enabled	-	0	Immediately	During operation	-
H0A-04	Motor overload protection gain	50 to 300	%	100	Immediately	At stop	-

Para.	Name	Value Range	Unit	Default	Effective Time	Setting Condition	Related Mode
H0A-08	Overspeed threshold	0 to 10000	RPM	0	Immediately	During operation	PST
H0A-09	Maximum position pulse frequency	100 to 4000	kHz	4000	Immediately	At stop	P
H0A-10	Threshold of excessive position deviation	1 to 1073741824	Encoder/ Reference unit	3145728	Immediately	During operation	P
H0A-12	Runaway protection selection	0: Disabled 1: Enabled	-	1	Immediately	During operation	PST
H0A-16	Threshold of low-frequency resonance position deviation	1 to 1000	Encoder unit	5	Immediately	During operation	P
H0A-17	Position setting unit	0: Encoder unit 1: Reference unit	-	0	Immediately	At stop	P
H0A-19	DI8 filter time constant	0 to 255	25 ns	80	Next power-on	At stop	-
H0A-20	DI9 filter time constant	0 to 255	25 ns	80	Next power-on	At stop	-
H0A-24	Filter time constant of low-speed pulse input pin	0 to 255	25 ns	30	Next power-on	At stop	P
H0A-25	Filter time constant of speed feedback display value	0 to 5000	ms	50	Immediately	At stop	-
H0A-26	Motor overload warning (E909.0)/ fault (E620.0) selection	0: Not shield 1: Shield	-	0	Immediately	At stop	-
H0A-27	Speed DO filter time constant	0 to 5000	ms	10	Immediately	At stop	-
H0A-28	Quadrature encoder filter time constant	0 to 255	25 ns	30	Next power-on	At stop	-
H0A-30	Filter time constant of high-speed pulse input pin	0 to 255	25 ns	3	Next power-on	At stop	P
H0A-32	Time window of locked rotor over-temperature protection	10 to 65535	ms	200	Immediately	During operation	-
H0A-33	Locked rotor over-temperature protection	0: Disabled 1: Enabled	-	1	Immediately	During operation	-
H0A-36	Encoder multi-turn overflow fault selection	0: Not hide 1: Hide	-	0	Immediately	At stop	ALL

Para.	Name	Value Range	Unit	Default	Effective Time	Setting Condition	Related Mode
H0A-40	Soft limit function	0: Disabled 1: Enabled immediately after power-on 2: Enabled after homing	1	0	Immediately	At stop	PST
H0A-41	Soft limit maximum value	–2147483648 to +2147483647	Reference unit	2147483647	Immediately	At stop	PST
H0A-43	Soft limit minimum value	–2147483648 to +2147483647	Reference unit	–2147483648	Immediately	At stop	PST
H0A-47	Brake protection detection function	0: Disabled 1: Enabled	-	1	Immediately	During operation	ALL
H0A-48	Detected gravity load value	0 to 300.0	%	30.0	Immediately	During operation	ALL

10.13 Group H0B: Monitoring Parameters

Para.	Name	Value Range	Unit	Default	Effective Time	Setting Condition	Related Mode
H0B-00	Actual motor speed	-	RPM	-	-	At display	PST
H0B-01	Speed reference	-	RPM	-	-	At display	PS
H0B-02	Internal torque reference (relative to the rated torque)	-	%	-	-	At display	PST
H0B-03	Monitored DI status	-	-	-	-	At display	PST
H0B-05	Monitored DO status	-	-	-	-	At display	PST
H0B-07	Absolute position counter (32-bit decimal number)	-	Reference unit	-	-	At display	PST
H0B-09	Mechanical angle (pulses starting from the home)	-	Encoder unit	-	-	At display	PST
H0B-10	Electrical angle	-	°	-	-	At display	PST
H0B-11	Speed corresponding to the position reference	-	RPM	-	-	At display	P
H0B-12	Average load ratio	-	%	-		At display	PST
H0B-13	Input pulse reference counter (32-bit decimal number)	-	Reference unit	-	-	At display	P
H0B-15	Encoder position deviation counter (32-bit decimal number)	-	Encoder unit	-	-	At display	P
H0B-17	Feedback pulse counter (32-bit decimal number)	-	Encoder unit	-	-	At display	PST
H0B-19	Total power-on time (32-bit decimal number)	-	s	-	-	At display	PST
H0B-21	AI1 sampling voltage	-	V	-	-	At display	PST
H0B-22	AI2 sampling voltage	-	V	-	-	At display	PST

Para.	Name	Value Range	Unit	Default	Effective Time	Setting Condition	Related Mode
H0B-24	RMS value of phase current	-	A	-	-	At display	PST
H0B-26	Bus voltage	-	V	-	-	At display	PST
H0B-27	Module temperature	-	°C	-	-	At display	PST
H0B-33	Fault log	0: Current fault 1: Last fault 2: Last 2nd fault ... 9: Last 9th fault	-	0	Immediately	During operation	PST
H0B-34	Code of the selected fault	-	-	-	-	At display	PST
H0B-35	Time stamp upon occurrence of the selected fault	-	s		-	At display	PST
H0B-37	Motor speed upon occurrence of the selected fault	-	RPM	-	-	At display	PST
H0B-38	Motor phase U current upon occurrence of the selected fault	-	A	-	-	At display	PST
H0B-39	Motor phase V current upon occurrence of the selected fault	-	A	-	-	At display	PST
H0B-40	Bus voltage upon occurrence of the selected fault	-	V	-	-	At display	PST
H0B-41	Input terminal status upon occurrence of the selected fault	-	-	-	-	At display	PST
H0B-42	Output terminal status upon occurrence of the selected fault	-	-	-	-	At display	PST
H0B-53	Position deviation counter	-	Reference unit	-	-	At display	P
H0B-55	Actual motor speed (in 0.1 RPM)	-	RPM	-	-	At display	PST
H0B-58	Mechanical absolute position (low 32 bits)	-	Encoder unit	0	-	At display	ALL
H0B-60	Mechanical absolute position (high 32 bits)	-	Encoder unit	0	-	At display	ALL
H0B-64	Real-time position reference counter	-	Reference unit	-	-	At display	PST
H0B-70	Number of absolute encoder revolutions	-	r	0	-	At display	ALL
H0B-71	Position of the absolute encoder within one turn	-	Encoder Unit	0	-	At display	ALL
H0B-77	Absolute position of absolute encoder (low 32 bits)	-	Encoder Unit	0	-	At display	ALL
H0B-79	Absolute position of absolute encoder (high 32 bits)	-	Encoder Unit	0	-	At display	ALL
H0B-81	Single-turn position of the rotating load (low 32 bits)	-	Encoder unit	0	-	At display	ALL

Para.	Name	Value Range	Unit	Default	Effective Time	Setting Condition	Related Mode
H0B-83	Single-turn position of the rotating load (high 32 bits)	-	Encoder unit	0	-	At display	ALL
H0B-85	Single-turn position of the rotating load	-	Reference unit	0	-	At display	ALL

10.14 Group H0C: Communication Parameters

Para.	Name	Value Range	Unit	Default	Effective Time	Setting Condition	Related Mode
H0C-00	Servo axis address	1 to 127 0: Broadcast address	-	1	Immediately	During operation	PST
H0C-02	Baud rate of the serial port	0: 2400 kbp/s 1: 4800 kbp/s 2: 9600 kbp/s 3: 19200 kbp/s 4: 38400 kbp/s 5: 57600 kbp/s	-	5	Immediately	During operation	PST
H0C-03	Modbus data format	0: No parity, 2 stop bits 1: Even parity, 1 stop bit 2: Odd parity, 1 stop bit 3: No parity, 1 stop bit	-	0	Immediately	During operation	PST
H0C-08	CAN communication rate	0: 20 k 1: 50 k 2: 100 k 3: 125 k 4: 250 k 5: 500 k 6: 1 M 7: 1 M	-	5	Immediately	During operation	PST
H0C-09	Communication VDI	0: Disabled 1: Enabled	-	0	Immediately	At stop	PST
H0C-10	VDI default value upon power-on	Bit0: VDI1 default value … Bit15: VDI16 default value	-	0	Next power-on	During operation	PST
H0C-11	Communication VDO	0: Disabled 1: Enabled	-	0	Immediately	At stop	PST
H0C-12	Default level of the VDO allocated with function 0	Bit0: VDO1 default value … Bit15: VDO16 default value	-	0	Immediately	At stop	PST
H0C-13	Update parameters written through Modbus communication to EEPROM	0: Not update parameters to EEPROM 1: Update parameters except for groups H0B and H0D to EEPROM	-	1	Immediately	During operation	PST

Para.	Name	Value Range	Unit	Default	Effective Time	Setting Condition	Related Mode
H0C-14	Modbus error code	New protocol: 0x0001: Illegal command code 0x0002: Illegal data address 0x0003: Illegal data 0x0004: Slave device fault Previous protocol: 0x0002: Command code not being 0x03/0x06/0x10 0x0004: CRC checksum received and calculated by servo drive different from checksum in data frame 0x0008: Accessed parameter not exist 0x0010: Written parameter value exceeding limits 0x0080-: Written parameter modifiable only in the stop state but servo drive being in the running state	1	-	-	At display	-
H0C-13	Update parameters written through CAN communication to EEPROM	0: Not update parameters to EEPROM 1: Update parameters except for groups H0B and H0D to EEPROM	-	0	Immediately	During operation	PST
H0C-25	Modbus response delay	0 to 5000	ms	1	Immediately	During operation	PST
H0C-26	Sequence of Modbus communication data bits	0: Upper bits are followed by lower bits 1: Lower bits are followed by upper bits	1	1	Immediately	During operation	PST
H0C-30	Modbus error frame format	0: Previous protocol 1: New protocol (standard)	1	1	Immediately	During operation	PST

10.15 Group H0D: Auxiliary Function Parameters

Para.	Name	Value Range	Unit	Default	Effective Time	Setting Condition	Related Mode
H0D-00	Software reset	0: No operation 1: Enabled	-	0	Immediately	At stop	-
H0D-01	Fault reset	0: No operation 1: Enabled	-	0	Immediately	At stop	-
H0D-02	Offline inertia auto-tuning	-	-	-	Immediately	During operation	-
H0D-03	Reserved parameter	-	-	-	-	-	-
H0D-05	Emergency stop	0: No operation 1: Enabled	-	0	Immediately	During operation	-
H0D-10	Automatic adjustment of analog channel	0: No operation 1: AI1 adjustment 2: AI2 adjustment	-	0	Immediately	At stop	-

Para.	Name	Value Range	Unit	Default	Effective Time	Setting Condition	Related Mode
H0D-11	Jog trial run	(with filter)	-	-	-	-	-
H0D-17	Forced DI/DO selection	0: No operation 1: Forced DI enabled, forced DO disabled 2: Forced DO enabled, forced DI disabled 3: Forced DI and DO enabled	-	0	Immediately	During operation	-
H0D-18	Forced DI setting	0 to 0x01FF	-	0x01FF	Immediately	During operation	-
H0D-19	Forced DO setting	0 to 0x001F	-	0	Immediately	During operation	-
H0D-20	Absolute encoder reset selection	0: No operation 1: Reset faults and multi-turn data 2: Reset faults and multi-turn data	-	0	Immediately	At stop	ALL
H0D-24	Gravity load auto-tuning	0: Disabled 1: Enabled	-	0	Immediately	During operation	-

10.16 Group H0F: Fully Closed-Loop Parameters

Para.	Name	Value Range	Unit	Default Setting	Effective Time	Setting Condition	Related Mode
H0F-00	Encoder feedback mode	0 to 2	-	0	Immediately	At stop	P
H0F-01	External encoder operation mode	0: Standard running direction 1: Reverse running direction	-	0	Immediately	At stop	P
H0F-04	External encoder pulses per revolution	0 to 1073741824	External encoder unit	10000	Next power-on	At stop	P
H0F-08	Excessive position deviation in fully closed-loop mode	0 to 1073741824	External encoder unit	10000	Immediately	During operation	P
H0F-10	Meaning	0 to 100	r	0	Immediately	During operation	P
H0F-13	Compound vibration suppression filter time constant	0 to 6553.5	ms	0	Immediately	During operation	P
H0F-16	Fully closed-loop position deviation counter	–1073741824 to +1073741824	External encoder unit	0	-	At display	P
H0F-18	Internal encoder feedback pulse counter	–1073741824 to +1073741824	External encoder unit	0	-	At display	P
H0F-20	External encoder feedback pulse counter	–1073741824 to +1073741824	External encoder unit	0	-	At display	P

10.17 Group H11: Multi-Position Parameters

Para.	Name	Value Range	Unit	Default	Effective Time	Setting Condition	Related Mode
H11-00	Multi-position running mode	0: Stop after running for one cycle (number of displacements defined by H11-01) 1: Cyclic operation (number of displacement defined by H11-01) 2: DI-based operation (defined by DI) 3: Sequential operation (number of displacements defined by H11-01)	-	1	Immediately	At stop	P
H11-01	Number of position references	1 to 16	-	1	Immediately	At stop	P
H11-02	Start position upon restart after pause	Valid in modes other than the DI mode 0: Continue to execute the rest of the positions 1: Start from the 1st position	-	0	Immediately	At stop	P
H11-03	Time unit	0: ms 1: s	-	0	Immediately	At stop	P
H11-04	Displacement reference type	0: Relative displacement reference 1: Absolute displacement reference	-	0	Immediately	At stop	P
H11-05	Start position of sequential running	0 to 16	-	0	Immediately	At stop	P
H11-12	1st displacement	–1073741824 to +1073741824	Reference unit	10000	Immediately	During operation	P
H11-14	Max. running speed of 1st displacement	1 to 6000	RPM	200	Immediately	During operation	P
H11-15	Acceleration/Deceleration time of 1st displacement	0 to 65535	ms(s)	10	Immediately	During operation	P
H11-16	Waiting time after 1st displacement	0 to 10000	ms(s)	10	Immediately	During operation	P
H11-17	2nd displacement	–1073741824 to +1073741824	Reference unit	10000	Immediately	During operation	P
H11-19	Max. running speed of 2nd displacement	1 to 6000	RPM	200	Immediately	During operation	P
H11-20	Acceleration/Deceleration time of 2nd displacement	0 to 65535	ms(s)	10	Immediately	During operation	P

Para.	Name	Value Range	Unit	Default	Effective Time	Setting Condition	Related Mode
H11-21	Waiting time after 2nd displacement	0 to 10000	ms(s)	10	Immediately	During operation	P
H11-22	3rd displacement	–1073741824 to +1073741824	Reference unit	10000	Immediately	During operation	P
H11-24	Max. running speed of 3rd displacement	1 to 6000	RPM	200	Immediately	During operation	P
H11-25	Acceleration/Deceleration time of 3rd displacement	0 to 65535	ms(s)	10	Immediately	During operation	P
H11-26	Waiting time after 3rd displacement	0 to 10000	ms(s)	10	Immediately	During operation	P
H11-27	4th displacement	–1073741824 to +1073741824	Reference unit	10000	Immediately	During operation	P
H11-29	Max. running speed of 4th displacement	1 to 6000	RPM	200	Immediately	During operation	P
H11-30	Acceleration/Deceleration time of 4th displacement	0 to 65535	ms(s)	10	Immediately	During operation	P
H11-31	Waiting time after 4th displacement	0 to 10000	ms(s)	10	Immediately	During operation	P
H11-32	5th displacement	–1073741824 to +1073741824	Reference unit	10000	Immediately	During operation	P
H11-34	Max. running speed of 5th displacement	1 to 6000	RPM	200	Immediately	During operation	P
H11-35	Acceleration/Deceleration time of 5th displacement	0 to 65535	ms(s)	10	Immediately	During operation	P
H11-36	Waiting time after 5th displacement	0 to 10000	ms(s)	10	Immediately	During operation	P
H11-37	6th displacement	–1073741824 to +1073741824	Reference unit	10000	Immediately	During operation	P
H11-39	Max. running speed of 6th displacement	1 to 6000	RPM	200	Immediately	During operation	P
H11-40	Acceleration/Deceleration time of 6th displacement	0 to 65535	ms(s)	10	Immediately	During operation	P
H11-41	Waiting time after 6th displacement	0 to 10000	ms(s)	10	Immediately	During operation	P

Para.	Name	Value Range	Unit	Default	Effective Time	Setting Condition	Related Mode
H11-42	7th displacement	–1073741824 to +1073741824	Reference unit	10000	Immediately	During operation	P
H11-44	Max. running speed of 7th displacement	1 to 6000	RPM	200	Immediately	During operation	P
H11-45	Acceleration/Deceleration time of 7th displacement	0 to 65535	ms(s)	10	Immediately	During operation	P
H11-46	Waiting time after 7th displacement	0 to 10000	ms(s)	10	Immediately	During operation	P
H11-47	8th displacement	–1073741824 to +1073741824	Reference unit	10000	Immediately	During operation	P
H11-49	Max. running speed of 8th displacement	1 to 6000	RPM	200	Immediately	During operation	P
H11-50	Acceleration/Deceleration time of 8th displacement	0 to 65535	ms(s)	10	Immediately	During operation	P
H11-51	Waiting time after 8th displacement	0 to 10000	ms(s)	10	Immediately	During operation	P
H11-52	9th displacement	–1073741824 to +1073741824	Reference unit	10000	Immediately	During operation	P
H11-54	Max. running speed of 9th displacement	1 to 6000	RPM	200	Immediately	During operation	P
H11-55	Acceleration/Deceleration time of 9th displacement	0 to 65535	ms(s)	10	Immediately	During operation	P
H11-56	Waiting time after 9th displacement	0 to 10000	ms(s)	10	Immediately	During operation	P
H11-57	10th displacement	–1073741824 to +1073741824	Reference unit	10000	Immediately	During operation	P
H11-59	Maximum speed of 10th displacement	1 to 6000	RPM	200	Immediately	During operation	P
H11-60	Acceleration/Deceleration time of 10th displacement	0 to 65535	ms(s)	10	Immediately	During operation	P
H11-61	Waiting time after 10th displacement	0 to 10000	ms(s)	10	Immediately	During operation	P

Para.	Name	Value Range	Unit	Default	Effective Time	Setting Condition	Related Mode
H11-62	11th displacement	–1073741824 to +1073741824	Reference unit	10000	Immediately	During operation	P
H11-64	Maximum speed of 11th displacement	1 to 6000	RPM	200	Immediately	During operation	P
H11-65	Acceleration/Deceleration time of 11th displacement	0 to 65535	ms(s)	10	Immediately	During operation	P
H11-66	Waiting time after 11th displacement	0 to 10000	ms(s)	10	Immediately	During operation	P
H11-67	12th displacement	–1073741824 to +1073741824	Reference unit	10000	Immediately	During operation	P
H11-69	Maximum speed of 12th displacement	1 to 6000	RPM	200	Immediately	During operation	P
H11-70	Acceleration/Deceleration time of 12th displacement	0 to 65535	ms(s)	10	Immediately	During operation	P
H11-71	Waiting time after 12th displacement	0 to 10000	ms(s)	10	Immediately	During operation	P
H11-72	13th displacement	–1073741824 to +1073741824	Reference unit	10000	Immediately	During operation	P
H11-74	Maximum speed of 13th displacement	1 to 6000	RPM	200	Immediately	During operation	P
H11-75	Acceleration/Deceleration time of 13th displacement	0 to 65535	ms(s)	10	Immediately	During operation	P
H11-76	Waiting time after 13th displacement	0 to 10000	ms(s)	10	Immediately	During operation	P
H11-77	14th displacement	–1073741824 to +1073741824	Reference unit	10000	Immediately	During operation	P
H11-79	Maximum speed of 14th displacement	1 to 6000	RPM	200	Immediately	During operation	P
H11-80	Acceleration/Deceleration time of 14th displacement	0 to 65535	ms(s)	10	Immediately	During operation	P

Para.	Name	Value Range	Unit	Default	Effective Time	Setting Condition	Related Mode
H11-81	Waiting time after 14th displacement	0 to 10000	ms(s)	10	Immediately	During operation	P
H11-82	15th displacement	–1073741824 to +1073741824	Reference unit	10000	Immediately	During operation	P
H11-84	Maximum speed of 15th displacement	1 to 6000	RPM	200	Immediately	During operation	P
H11-85	Acceleration/Deceleration time of 15th displacement	0 to 65535	ms(s)	10	Immediately	During operation	P
H11-86	Waiting time after 15th displacement	0 to 10000	ms(s)	10	Immediately	During operation	P
H11-87	16th displacement	–1073741824 to +1073741824	Reference unit	10000	Immediately	During operation	P
H11-89	Maximum speed of 16th displacement	1 to 6000	RPM	200	Immediately	During operation	P
H11-90	Acceleration/Deceleration time of 16th displacement	0 to 65535	ms(s)	10	Immediately	During operation	P
H11-91	Waiting time after 16th displacement	0 to 10000	ms(s)	10	Immediately	During operation	P

10.18 Group H12: Multi-Speed Parameters

Para.	Name	Value Range	Unit	Default	Effective Time	Setting Condition	Related Mode
H12-00	Multi-speed reference running mode	0: Stop after running for one cycle (number of speeds selectable through H12-01) 1: Cyclic operation Stop after running for one cycle (number of speeds selectable through H12-01) 2: Switchover through external DI	-	1	Immediately	At stop	S
H12-01	Number of speeds	1 to 16	-	16	Immediately	At stop	S
H12-02	Running time unit	0: s 1: min	-	0	Immediately	At stop	S
H12-03	Acceleration time 1	0 to 65535	ms	10	Immediately	At stop	S

Para.	Name	Value Range	Unit	Default	Effective Time	Setting Condition	Related Mode
H12-04	Deceleration time 1	0 to 65535	ms	10	Immediately	At stop	S
H12-05	Acceleration time 2	0 to 65535	ms	50	Immediately	At stop	S
H12-06	Deceleration time 2	0 to 65535	ms	50	Immediately	At stop	S
H12-07	Acceleration time 3	0 to 65535	ms	100	Immediately	At stop	S
H12-08	Deceleration time 3	0 to 65535	ms	100	Immediately	At stop	S
H12-09	Acceleration time 4	0 to 65535	ms	150	Immediately	At stop	S
H12-10	Deceleration time 4	0 to 65535	ms	150	Immediately	At stop	S
H12-20	1st speed reference	–6000 to +6000	RPM	0	Immediately	At stop	S
H12-21	Running time of the 1st speed reference	0 to 6553.5	s(min)	5.0	Immediately	At stop	S
H12-22	Acceleration/Deceleration time of 1st speed reference	0: Zero acceleration/deceleration time 1: Acceleration/Deceleration time 1 2: Acceleration/Deceleration time 2 3: Acceleration/Deceleration time 3 4: Acceleration/Deceleration time 4	-	0	Immediately	At stop	S
H12-23	2nd speed reference	–6000 to +6000	RPM	100	Immediately	At stop	S
H12-24	Running time of the 2nd speed reference	0 to 6553.5	s(min)	5.0	Immediately	At stop	S
H12-25	Acceleration/Deceleration time of 2nd speed reference	0: Zero acceleration/deceleration time 1: Acceleration/Deceleration time 1 2: Acceleration/Deceleration time 2 3: Acceleration/Deceleration time 3 4: Acceleration/Deceleration time 4	-	0	Immediately	At stop	S
H12-26	3rd speed reference	–6000 to +6000	RPM	300	Immediately	At stop	S
H12-27	Running time of the 3rd speed reference	0 to 6553.5	s(min)	5.0	Immediately	At stop	S

Para.	Name	Value Range	Unit	Default	Effective Time	Setting Condition	Related Mode
H12-28	Acceleration/Deceleration time of 3rd speed reference	0: Zero acceleration/deceleration time 1: Acceleration/Deceleration time 1 2: Acceleration/Deceleration time 2 3: Acceleration/Deceleration time 3 4: Acceleration/Deceleration time 4	-	0	Immediately	At stop	S
H12-29	4th speed reference	–6000 to +6000	RPM	500	Immediately	At stop	S
H12-30	Running time of the 4th speed reference	0 to 6553.5	s(min)	5.0	Immediately	At stop	S
H12-31	Acceleration/Deceleration time of 4th speed reference	0: Zero acceleration/deceleration time 1: Acceleration/Deceleration time 1 2: Acceleration/Deceleration time 2 3: Acceleration/Deceleration time 3 4: Acceleration/Deceleration time 4	-	0	Immediately	At stop	S
H12-32	5th speed reference	–6000 to +6000	RPM	700	Immediately	At stop	S
H12-33	Running time of the 5th speed reference	0 to 6553.5	s(min)	5.0	Immediately	At stop	S
H12-34	Acceleration/Deceleration time of 5th speed reference	0: Zero acceleration/deceleration time 1: Acceleration/Deceleration time 1 2: Acceleration/Deceleration time 2 3: Acceleration/Deceleration time 3 4: Acceleration/Deceleration time 4	-	0	Immediately	At stop	S
H12-35	6th speed reference	–6000 to +6000	RPM	900	Immediately	At stop	S
H12-36	Running time of the 6th speed reference	0 to 6553.5	s(min)	5.0	Immediately	At stop	S
H12-37	Acceleration/Deceleration time of 6th speed reference	0: Zero acceleration/deceleration time 1: Acceleration/Deceleration time 1 2: Acceleration/Deceleration time 2 3: Acceleration/Deceleration time 3 4: Acceleration/Deceleration time 4	-	0	Immediately	At stop	S
H12-38	7th speed reference	–6000 to +6000	RPM	600	Immediately	At stop	S

Para.	Name	Value Range	Unit	Default	Effective Time	Setting Condition	Related Mode
H12-39	Running time of the 7th speed reference	0 to 6553.5	s(min)	5.0	Immediately	At stop	S
H12-40	Acceleration/Deceleration time of 7th speed reference	0: Zero acceleration/deceleration time 1: Acceleration/Deceleration time 1 2: Acceleration/Deceleration time 2 3: Acceleration/Deceleration time 3 4: Acceleration/Deceleration time 4	-	0	Immediately	At stop	S
H12-41	8th speed reference	–6000 to +6000	RPM	300	Immediately	At stop	S
H12-42	Running time of the 8th speed reference	0 to 6553.5	s(min)	5.0	Immediately	At stop	S
H12-43	Acceleration/Deceleration time of 8th speed reference	0: Zero acceleration/deceleration time 1: Acceleration/Deceleration time 1 2: Acceleration/Deceleration time 2 3: Acceleration/Deceleration time 3 4: Acceleration/Deceleration time 4	-	0	Immediately	At stop	S
H12-44	9th speed reference	–6000 to +6000	RPM	100	Immediately	At stop	S
H12-45	Running time of the 9th speed reference	0 to 6553.5	s(min)	5.0	Immediately	At stop	S
H12-46	Acceleration/Deceleration time of 9th speed reference	0: Zero acceleration/deceleration time 1: Acceleration/Deceleration time 1 2: Acceleration/Deceleration time 2 3: Acceleration/Deceleration time 3 4: Acceleration/Deceleration time 4	-	0	Immediately	At stop	S
H12-47	10th speed reference	–6000 to +6000	RPM	–100	Immediately	At stop	S
H12-48	Running time of the 10th speed reference	0 to 6553.5	s(min)	5.0	Immediately	At stop	S

Para.	Name	Value Range	Unit	Default	Effective Time	Setting Condition	Related Mode
H12-49	Acceleration/Deceleration time of 10th speed reference	0: Zero acceleration/deceleration time 1: Acceleration/Deceleration time 1 2: Acceleration/Deceleration time 2 3: Acceleration/Deceleration time 3 4: Acceleration/Deceleration time 4	-	0	Immediately	At stop	S
H12-50	11th speed reference	–6000 to +6000	RPM	–300	Immediately	At stop	S
H12-51	Running time of the 11th speed reference	0 to 6553.5	s(min)	5.0	Immediately	At stop	S
H12-52	Acceleration/Deceleration time of 11th speed reference	0: Zero acceleration/deceleration time 1: Acceleration/Deceleration time 1 2: Acceleration/Deceleration time 2 3: Acceleration/Deceleration time 3 4: Acceleration/Deceleration time 4	-	0	Immediately	At stop	S
H12-53	12th speed reference	–6000 to +6000	RPM	–500	Immediately	At stop	S
H12-54	Running time of the 12th speed reference	0 to 6553.5	s(min)	5.0	Immediately	At stop	S
H12-55	Acceleration/Deceleration time of 12th speed reference	0: Zero acceleration/deceleration time 1: Acceleration/Deceleration time 1 2: Acceleration/Deceleration time 2 3: Acceleration/Deceleration time 3 4: Acceleration/Deceleration time 4	-	0	Immediately	At stop	S
H12-56	13th speed reference	–6000 to +6000	RPM	–700	Immediately	At stop	S
H12-57	Running time of the 13th speed reference	0 to 6553.5	s(min)	5.0	Immediately	At stop	S
H12-58	Acceleration/Deceleration time of 13th speed reference	0: Zero acceleration/deceleration time 1: Acceleration/Deceleration time 1 2: Acceleration/Deceleration time 2 3: Acceleration/Deceleration time 3 4: Acceleration/Deceleration time 4	-	0	Immediately	At stop	S
H12-59	14th speed reference	–6000 to +6000	RPM	–900	Immediately	At stop	S

Para.	Name	Value Range	Unit	Default	Effective Time	Setting Condition	Related Mode
H12-60	Running time of the 14th speed reference	0 to 6553.5	s(min)	5.0	Immediately	At stop	S
H12-61	Acceleration/Deceleration time of 14th speed reference	0: Zero acceleration/deceleration time 1: Acceleration/Deceleration time 1 2: Acceleration/Deceleration time 2 3: Acceleration/Deceleration time 3 4: Acceleration/Deceleration time 4	-	0	Immediately	At stop	S
H12-62	15th speed reference	–6000 to +6000	RPM	–600	Immediately	At stop	S
H12-63	Running time of the 15th speed reference	0 to 6553.5	s(min)	5.0	Immediately	At stop	S
H12-64	Acceleration/Deceleration time of 15th speed reference	0: Zero acceleration/deceleration time 1: Acceleration/Deceleration time 1 2: Acceleration/Deceleration time 2 3: Acceleration/Deceleration time 3 4: Acceleration/Deceleration time 4	-	0	Immediately	At stop	S
H12-65	16th speed reference	–6000 to +6000	RPM	–300	Immediately	At stop	S
H12-66	Running time of the 16th speed reference	0 to 6553.5	s(min)	5.0	Immediately	At stop	S
H12-67	Acceleration/Deceleration time of 16th speed reference	0: Zero acceleration/deceleration time 1: Acceleration/Deceleration time 1 2: Acceleration/Deceleration time 2 3: Acceleration/Deceleration time 3 4: Acceleration/Deceleration time 4	-	0	Immediately	At stop	S

10.19 Group H17: VDI/VDO Parameters

Para.	Name	Value Range	Unit	Default	Effective Time	Setting Condition	Related Mode
H17-00	VDI1 function selection	0 to 37	-	0	At stop	During operation	-
H17-01	VDI1 logic selection	0: Valid when the written value is 1 1: Valid when the written value changes from 0 to 1	-	0	At stop	During operation	-

Para.	Name	Value Range	Unit	Default	Effective Time	Setting Condition	Related Mode
H17-02	VDI2 function selection	0 to 37	-	0	At stop	During operation	-
H17-03	VDI2 logic selection	0: Valid when the written value is 1 1: Valid when the written value changes from 0 to 1	-	0	At stop	During operation	-
H17-04	VDI3 function selection	0 to 37	-	0	At stop	During operation	-
H17-05	VDI3 logic selection	0: Valid when the written value is 1 1: Valid when the written value changes from 0 to 1	-	0	At stop	During operation	-
H17-06	VDI4 function selection	0 to 37	-	0	At stop	During operation	-
H17-07	VDI4 logic selection	0: Valid when the written value is 1 1: Valid when the written value changes from 0 to 1	-	0	At stop	During operation	-
H17-08	VDI5 function selection	0 to 37	-	0	At stop	During operation	-
H17-09	VDI5 logic selection	0: Valid when the written value is 1 1: Valid when the written value changes from 0 to 1	-	0	At stop	During operation	-
H17-10	VDI6 function selection	0 to 37	-	0	At stop	During operation	-
H17-11	VDI6 logic selection	0: Valid when the written value is 1 1: Valid when the written value changes from 0 to 1	-	0	At stop	During operation	-
H17-12	VDI7 function selection	0 to 37	-	0	At stop	During operation	-
H17-13	VDI7 logic selection	0: Valid when the written value is 1 1: Valid when the written value changes from 0 to 1	-	0	At stop	During operation	-
H17-14	VDI8 function selection	0 to 37	-	0	At stop	During operation	-
H17-15	VDI8 logic selection	0: Valid when the written value is 1 1: Valid when the written value changes from 0 to 1	-	0	At stop	During operation	-
H17-16	VDI9 function selection	0 to 37	-	0	At stop	During operation	-
H17-17	VDI9 logic selection	0: Valid when the written value is 1 1: Valid when the written value changes from 0 to 1	-	0	At stop	During operation	-

Para.	Name	Value Range	Unit	Default	Effective Time	Setting Condition	Related Mode
H17-18	VDI10 function selection	0 to 37	-	0	At stop	During operation	-
H17-19	VDI10 logic selection	0: Valid when the written value is 1 1: Valid when the written value changes from 0 to 1	-	0	At stop	During operation	-
H17-20	VDI11 function selection	0 to 37	-	0	At stop	During operation	-
H17-21	VDI11 logic selection	0: Valid when the written value is 1 1: Valid when the written value changes from 0 to 1	-	0	At stop	During operation	-
H17-22	VDI12 function selection	0 to 37	-	0	At stop	During operation	-
H17-23	VDI12 logic selection	0: Valid when the written value is 1 1: Valid when the written value changes from 0 to 1	-	0	At stop	During operation	-
H17-24	VDI13 function selection	0 to 37	-	0	At stop	During operation	-
H17-25	VDI13 logic selection	0: Valid when the written value is 1 1: Valid when the written value changes from 0 to 1	-	0	At stop	During operation	-
H17-26	VDI14 function selection	0 to 37	-	0	At stop	During operation	-
H17-27	VDI14 logic selection	0: Valid when the written value is 1 1: Valid when the written value changes from 0 to 1	-	0	At stop	During operation	-
H17-28	VDI15 function selection	0 to 37	-	0	At stop	During operation	-
H17-29	VDI15 logic selection	0: Valid when the written value is 1 1: Valid when the written value changes from 0 to 1	-	0	At stop	During operation	-
H17-30	VDI16 function selection	0 to 37	-	0	At stop	During operation	
H17-31	VDI16 logic selection	0: Valid when the written value is 1 1: Valid when the written value changes from 0 to 1	-	0	At stop	During operation	-
H17-32	VDO virtual level	-	-	-	-	At display	-
H17-33	VDO1 function selection	0 to 22	-	0	At stop	During operation	-
H17-34	VDO1 logic selection	0: Output 1 when valid 1: Output 0 when valid	-	0	At stop	During operation	-

Para.	Name	Value Range	Unit	Default	Effective Time	Setting Condition	Related Mode
H17-35	VDO2 function selection	0 to 22	-	0	At stop	During operation	-
H17-36	VDO2 logic selection	0: Output 1 when valid 1: Output 0 when valid	-	0	At stop	During operation	-
H17-37	VDO3 function selection	0 to 22	-	0	At stop	During operation	-
H17-38	VDO3 logic selection	0: Output 1 when valid 1: Output 0 when valid	-	0	At stop	During operation	-
H17-39	VDO4 function selection	0 to 22	-	0	At stop	During operation	-
H17-40	VDO4 logic selection	0: Output 1 when valid 1: Output 0 when valid	-	0	At stop	During operation	-
H17-41	VDO5 function selection	0 to 22	-	0	At stop	During operation	-
H17-42	VDO5 logic selection	0: Output 1 when valid 1: Output 0 when valid	-	0	At stop	During operation	-
H17-43	VDO6 function selection	0 to 22	-	0	At stop	During operation	-
H17-44	VDO6 logic selection	0: Output 1 when valid 1: Output 0 when valid	-	0	At stop	During operation	-
H17-45	VDO7 function selection	0 to 22	-	0	At stop	During operation	-
H17-46	VDO7 logic selection	0: Output 1 when valid 1: Output 0 when valid	-	0	At stop	During operation	-
H17-47	VDO8 function selection	0 to 22	-	0	At stop	During operation	-
H17-48	VDO8 logic selection	0: Output 1 when valid 1: Output 0 when valid	-	0	At stop	During operation	-
H17-49	VDO9 function selection	0 to 22	-	0	At stop	During operation	-
H17-50	VDO9 logic selection	0: Output 1 when valid 1: Output 0 when valid	-	0	At stop	During operation	-
H17-51	VDO10 function selection	0 to 22	-	0	At stop	During operation	-
H17-52	VDO10 logic selection	0: Output 1 when valid 1: Output 0 when valid	-	0	At stop	During operation	-
H17-53	VDO11 function selection	0 to 22	-	0	At stop	During operation	-
H17-54	VDO11 logic selection	0: Output 1 when valid 1: Output 0 when valid	-	0	At stop	During operation	-
H17-55	VDO12 function selection	0 to 22	-	0	At stop	During operation	-
H17-56	VDO12 logic selection	0: Output 1 when valid 1: Output 0 when valid	-	0	At stop	During operation	-
H17-57	VDO13 function selection	0 to 22	-	0	At stop	During operation	-
H17-58	VDO13 logic selection	0: Output 1 when valid 1: Output 0 when valid	-	0	At stop	During operation	-
H17-59	VDO14 function selection	0 to 22	-	0	At stop	During operation	-
H17-60	VDO14 logic selection	0: Output 1 when valid 1: Output 0 when valid	-	0	At stop	During operation	-
H17-61	VDO15 function selection	0 to 22	-	0	At stop	During operation	-

Para.	Name	Value Range	Unit	Default	Effective Time	Setting Condition	Related Mode
H17-62	VDO15 logic selection	0: Output 1 when valid 1: Output 0 when valid	-	0	At stop	During operation	-
H17-63	VDO16 function selection	0 to 22	-	0	At stop	During operation	-
H17-64	VDO16 logic selection	0: Output 1 when valid 1: Output 0 when valid	-	0	At stop	During operation	-

10.20 Group H30: Servo-Related Variables Read Through Communication

The values are not displayed on the panel.

Para.	Name	Value Range	Unit	De-fault	Effective Time	Setting Condition	Related Mode
H30-00	Servo state read through communication	-	-	-	-	Read-only	PST
H30-01	DO function state 1 read through communication	-	-	-	-	Read-only	PST
H30-02	DO function state 2 read through communication	-	-	-	-	Read-only	PST
H30-03	Pulse reference sampling value read through communication	-	-	-	-	At display	PST

10.21 Group H31: Servo-Related Variables Set Through Communication

The values are not displayed on the panel.

Para.	Name	Value Range	Unit	Default	Effective Time	Setting Condition	Related Mode
H31-00	VDI virtual level set through communication	0 to 65535	-	0	Immediately	During operation	PST
H31-04	DO state set through communication	0 to 31	-	0	Immediately	During operation	PST
H31-09	Speed reference set through communication	–6000.000 to +6000.000	RPM	0	Immediately	During operation	S
H31-11	Torque reference set through communication	–100.000 to +100.000	%	0	Immediately	During operation	T

10.22 DI/DO Functions

Function No.	Name	Function Name	Description	Remarks
Functions of input signals				
FunIN.1	S-ON	Servo ON	Inactive: Servo motor disabled Active: Servo motor enabled upon power-on	The corresponding terminal logic must be level valid. The change of the corresponding DI/VDI or terminal logic is activated at next power-on.

Function No.	Name	Function Name	Description	Remarks
FunIN.2	ALM-RST	Fault and warning reset (edge valid)	Inactive: Disabled Active: Enabled	The corresponding terminal logic must be edge valid. If the logic is set to level valid, the servo drive will forcibly set it to edge valid. The servo drive can continue operating after some warnings are reset.
FunIN.3	GAIN-SEL	Gain Switchover	When H08-09 set to 1: Invalid: PI control for speed loop Valid: P control for speed loop When H08-09 set to 2: Invalid: Fixed at 1st gain Valid: Fixed at 2nd gain	It is recommended to set the logic of the corresponding terminal to level valid.
FunIN.4	CMD-SEL	Main/auxiliary reference switchover	Active: Current running reference being A Inactive: current running reference being B	It is recommended to set the logic of the corresponding terminal to level valid.
FunIN.5	DIR-SEL	Multi-speed reference direction switchover by DI	Inactive: Reference direction by default Active: Opposite to the reference direction	It is recommended to set the logic of the corresponding terminal to level valid.
FunIN.6	CMD1	Multi-reference switchover 1	Used to select a reference from 16 references.	It is recommended to set the logic of the corresponding terminal to level valid.
FunIN.7	CMD2	Multi-reference switchover 2	Used to select a reference from 16 references.	It is recommended to set the logic of the corresponding terminal to level valid.
FunIN.8	CMD3	Multi-reference switchover 3	Used to select a reference from 16 references.	It is recommended to set the logic of the corresponding terminal to level valid.
FunIN.9	CMD4	Multi-reference switchover 4	Used to select a reference from 16 references.	It is recommended to set the logic of the corresponding terminal to level valid.
FunIN.10	M1-SEL	Mode switchover 1	Used to switch among the speed control, position control, and torque control based on the selected control mode (H02-00 set to 3, 4, or 5).	It is recommended to set the logic of the corresponding terminal to level valid.
FunIN.11	M2-SEL	Mode switchover 2	Used to switch among the speed control, position control, and torque control based on the selected control mode (H02-00 set to 6).	It is recommended to set the logic of the corresponding terminal to level valid.
FunIN.12	ZCLAMP	Zero clamp enable	Valid: Zero clamp enabled Invalid: Zero clamp disabled	It is recommended to set the logic of the corresponding terminal to level valid.
FunIN.13	INHIBIT	Position reference inhibited	Invalid: Reference pulse input inhibited. Valid: Reference pulse input permitted	The function is upgraded from pulse inhibited to position reference inhibited. Position references include internal and external position references. The corresponding terminal logic must be level valid.

Function No.	Name	Function Name	Description	Remarks
FunIN.14	P-OT	Positive limit switch	Active: Forward drive disabled Inactive: Forward drive enabled	When the mechanical movement is beyond the movable range, the overtravel prevention function will be activated. It is recommended to set the logic of the corresponding terminal to level valid.
FunIN.15	N-OT	Negative limit switch	When the mechanical movement is beyond the movable range, the overtravel prevention function will be activated. Active: Reverse drive disabled Inactive: Reverse drive enabled	It is recommended to set the logic of the corresponding terminal to level valid.
FunIN.16	P-CL	Forward external torque limit	Switches the torque limit source by setting H07-07 (Torque limit source). When H07-07 set to 1: Valid: Forward external torque limit valid Invalid: Forward internal torque limit valid When H07-07 set to 3 and AI limit greater than forward external limit: Valid: Forward external torque limit valid Invalid: AI torque limit enabled When H07-07 set to 4: Valid: AI torque limit enabled Invalid: Forward internal torque limit valid	It is recommended to set the logic of the corresponding terminal to level valid.

Function No.	Name	Function Name	Description	Remarks
FunIN.17	N-CL	Reverse external torque limit	Switches the torque limit source by setting H07-07 (Torque limit source). When H07-07 set to 1: Valid: Reverse external torque limit valid Invalid: Reverse internal torque limit valid When H07-07 set to 3 and AI limit smaller than Reverse external limit: Valid: Reverse external torque limit valid Invalid: AI torque limit enabled When H07-07 set to 4: Valid: AI torque limit enabled Invalid: Reverse internal torque limit valid	It is recommended to set the logic of the corresponding terminal to level valid.
FunIN.18	JOGCMD+	Forward jog	Active: Input according to the command Inactive: RUN command input stopped	It is recommended to set the logic of the corresponding terminal to level valid.
FunIN.19	JOGCMD–	Reverse jog	Active: Input in reverse to the command Inactive: RUN command input stopped	It is recommended to set the logic of the corresponding terminal to level valid.
FunIN.20	POSSTEP	Step reference	Valid: Execute step reference set in H05-05, servo motor running Invalid: Servo motor in locked state	It is recommended to set the logic of the corresponding terminal to level valid.
FunIN.21	HX1	Hand wheel multiplying factor signal 1	HX1 valid and HX2 invalid: X10 HX1 invalid and HX2 valid: X100 Others: X1	It is recommended to set the logic of the corresponding terminal to level valid.
FunIN.22	HX2	Hand wheel multiplying factor signal 2		
FunIN.23	HX_EN	Hand wheel enable signal	Invalid: Control the position according to the setting of H05-00 Valid: Control the position according to the received hand wheel pulse signal in the position mode	It is recommended to set the logic of the corresponding terminal to level valid.
FunIN.24	GEAR_SEL	Electronic gear ratio switchover	Inactive: Electronic gear ratio 1 Active: Electronic gear ratio 2	It is recommended to set the logic of the corresponding terminal to level valid.
FunIN.25	TOQDirSel	Torque reference direction	Active: Forward direction Inactive: Reverse direction	It is recommended to set the logic of the corresponding terminal to level valid.
FunIN.26	SPDDirSel	Speed reference direction selection	Active: Forward direction Inactive: Reverse direction	It is recommended to set the logic of the corresponding terminal to level valid.

Function No.	Name	Function Name	Description	Remarks
FunIN.27	POSDirSel	Position reference direction selection	Invalid: The actual position reference direction is the same as the set position reference direction. Valid: The actual position reference direction is opposite to the set position reference direction.	It is recommended to set the logic of the corresponding terminal to level valid.
FunIN.28	PosInSen	Multi-position reference enable	Edge valid Inactive: Internal multi-reference ignored Active: Internal multi-reference started	It is recommended to set the logic of the corresponding terminal to level valid.
FunIN.29	XintFree	Interrupt positioning cancel	Inactive: Disabled Active: Enabled	It is recommended to set the logic of the corresponding terminal to edge valid.
FunIN.31	HomeSwitch	Home switch	Inactive: Not triggered Active: Triggered	The corresponding terminal logic must be level valid. Allocate this function to a high-speed DI terminal. If the logic is set to 2 (Rising edge valid), the servo drive forcibly changes it to 1 (Active high). If the logic is set to 3 (Falling edge valid), the servo drive forcibly changes it to 0 (Active low). If the logic is set to 4 (Both rising edge and falling edge valid), the servo drive forcibly changes it to 0 (Active low).
FunIN.32	HomingStart	Homing enable	Inactive: Disabled Active: Enabled	It is recommended to set the logic of the corresponding terminal to edge valid.
FunIN.33	XintInhibit	Interrupt positioning inhibited	Valid: Interrupt positioning inhibited Invalid: Interrupt positioning permitted	The corresponding terminal logic must be level valid. If the logic is set to 2 (Rising edge valid), the servo drive forcibly changes it to 1 (Active high). If the logic is set to 3 (Falling edge valid), the servo drive forcibly changes it to 0 (Active low). If the logic is set to 4 (Both rising edge and falling edge valid), the servo drive forcibly changes it to 0 (Active low).
FunIN.34	Emergency Stop	Emergency stop	Active: Position locked after stop at zero speed Inactive: Current running state not affected	It is recommended to set the logic of the corresponding terminal to level valid.
FunIN.35	ClrPosErr	Position deviation cleared	Valid: Position deviation cleared Invalid: Position deviation not cleared	It is recommended to set the logic of the corresponding terminal to edge valid. It is recommended to allocate this function to DI8 or DI9.

Function No.	Name	Function Name	Description	Remarks
FunIN.36	V_LmtSel	Internal speed limit source	Valid: H07-19 used as internal positive/negative speed limit (H07-17 set to 2) Invalid: H07-20 used as internal positive/negative speed limit (H07-17 set to 2)	It is recommended to set the logic of the corresponding terminal to level valid.
FunIN.37	PulseInhibit	Pulse input inhibited	When the reference source is set to pulse input (H05-00 set to 0) in the position control mode: Invalid: Respond to pulse input Valid: Not respond to pulse input	It is recommended to set the logic of the corresponding terminal to level valid.
Functions of output signals				
FunOUT.1	S-RDY	Servo ready	The servo drive is ready to receive the S-ON signal. Active: Servo ready Inactive: Servo not ready	-
FunOUT.2	TGON	Motor rotation output	Invalid: The absolute value of motor speed after filter is smaller than the value of H06-16. Valid: The absolute value of motor speed after filter is equal to or larger than the value of H06-16.	-
FunOUT.3	ZERO	Zero speed	Invalid: The absolute deviation between the motor speed feedback and the speed reference is greater than the value of H06-19. Valid: The absolute deviation between the motor speed feedback and the speed reference is smaller than or equal to the value of H06-19.	-
FunOUT.4	V-CMP	Speed matching	In speed control mode, when the absolute value of the deviation between the motor speed and the speed reference is smaller than the value of H06-17, this signal is valid.	-
FunOUT.5	COIN	Positioning completed	In position control mode, when the position deviation pulses reach the value of H05-21, this signal is valid.	-
FunOUT.6	NEAR	Positioning near	In the position control mode, when the position deviation pulses reach the value of H05-22, this signal is valid.	-

Function No.	Name	Function Name	Description	Remarks
FunOUT.7	C-LT	Torque limit	Used to confirm the torque limit Valid: Motor torque limited Invalid: Motor torque not limited	-
FunOUT.8	V-LT	Speed limit	Used to confirm the speed limit in torque control mode Valid: Motor speed limited Invalid: Motor speed not limited	-
FunOUT.9	BK	Brake output	Brake signal output: Valid: Brake released Invalid: Brake applied	-
FunOUT.10	WARN	Warning output	The warning output signal is valid (ON)	-
FunOUT.11	ALM	Fault output	This signal is valid when a fault is detected.	-
FunOUT.12	ALMO1	3-digit fault code output	A 3-digit fault code is output.	-
FunOUT.13	ALMO2	3-digit fault code output	A 3-digit fault code is output.	-
FunOUT.14	ALMO3	3-digit fault code output	A 3-digit fault code is output.	-
FunOUT.15	Xintcoin	Interrupt positioning completed	Valid: Interrupt positioning completed Invalid: Interrupt positioning not completed	-
FunOUT.16	HomeAttain	Homing output	Homing state: Valid: Homing completed Invalid: Homing not completed	-
FunOUT.17	ElecHome Attain	Electrical homing output	Electrical homing state: Valid: Electrical homing completed Invalid: Electrical homing not completed	-
FunOUT.18	ToqReach	Torque reached output	Valid: Absolute value of torque reference reaching the setpoint Invalid: Absolute value of torque reference smaller than the setpoint	-
FunOUT.19	V-Arr	Speed reached output	Valid: Speed feedback reaches the setpoint. Invalid: Speed feedback does not reach the setpoint.	-
FunOUT.20	AngIntRdy	Angle auto-tuning output	Valid: Angle auto-tuning completed Invalid: Angle auto-tuning not completed	-
FunOUT.21	DB	Dynamic braking output	Valid: Dynamic brake relay open Invalid: Dynamic brake relay closed	-

Function No.	Name	Function Name	Description	Remarks
FunOUT.22	CmdOk	Internal reference output	Valid: Internal reference completed Invalid: Internal reference not completed	

Chapter 11 Troubleshooting

11.1 Safety Precautions

DANGER



◆ Avoid wiring while the power is on. Keep all circuit breakers OFF during wiring. Failure to comply may result in electric shock.

WARNING



◆ Ground the servo drive according to local regulations. Failure to comply may result in electric shock or fire.

◆ Do not remove the servo drive housing or touch internal circuits when the servo drive is energized. Failure to comply may result in electric shock.

◆ Troubleshooting must be performed by professionals. The servo drive must be inspected, maintained, and repaired by professionals. Failure to comply may result in electric shock or fire.

◆ When installing the servo drive in an enclosed environment, such as a cabinet or casing box, use a cooling fan or air conditioner to keep the inlet temperature below 50°C. Failure to comply may result in overheat or fire.

◆ Tighten all screws using the specified torque. Failure to comply may result in electric shock or fire.

◆ Ensure that the product input voltage is within the rated voltage range indicated on the nameplate. Failure to comply may result in electric shock or fire.

◆ Keep combustible and explosive materials away from the servo drive.

CAUTION



◆ Cover the top of the servo drive with cloth or paper during installation to prevent foreign objects, such as metal chippings, oil, and water, from entering the servo drive. Foreign objects entering the servo drive may cause fault of the servo drive.

◆ Remove the cloth or paper after installation is completed. Failure to comply may degrade ventilation and result in over-temperature of the servo drive.

◆ Comply with ESD instructions when operating the servo drive. Failure to comply may damage circuits inside the servo drive

11.2 Logs of Faults and Warnings

In the order of decreasing severity, faults and warnings are divided into No.1, No.2, and No.3 classes.

No.1 non-resettable faults

No.1 resettable faults

No.2 resettable faults

No.3 resettable warnings

"Resettable" means that the keypad stops displaying the fault/warning when a "reset signal" is input.
Operating procedure:

Set 200D-02h to 1 (Fault reset)

Set the rising edge of bit 7 of the control word 0x6040 through the host controller.

To reset No.1 and No.2 resettable faults, switch off the S-ON signal first and then send the fault reset sig-

nal. To reset No.3 resettable warnings, send the fault reset signal directly.

☆ Related parameters:

Para.	Name	Value Range	Function	Setting Condition	Effective Time	Default
200Dh-02h	Fault reset	Disabled 1: Fault/Warning reset	For resettable faults and warnings, enable the keypad to stop displaying the fault. After reset, it is immediately restored to "0: No operation".	At stop	Immediately	0

☆ Related function No.:

Function No.	Name	Function Name	Function
FunIN.2	ALM-RST	Fault/Warning reset signal	This DI function is edge valid. It is inactive upon continuous high/low level. The servo drive can continue operating after some warnings are reset. When this function is allocated to a low-speed DI terminal and the logic of the terminal is level valid, the servo drive will forcibly change the DI terminal logic to edge valid. An active level change must last at least 3 ms. Otherwise, the fault reset function is inactive. Do not allocate this function to a high-speed DI terminal. Otherwise, the fault/warning reset will be inactive. Inactive: Fault/Warning not reset Active: Fault/Warning reset

The servo drive can keep logs of the latest 10 faults/warnings and the servo drive status parameters upon occurrence of the faults/warnings. Repeated faults or warnings among the latest 5 logs are logged as one fault or warning, and the servo drive status upon its occurrence is logged only once.

After a fault/warning is reset, the servo drive still keeps the log of the fault/warning. To clear the log, set 2002-20h (Parameter initialization) to 1 or 2.

You can select a fault/warning log number in 200B-22h (Fault log), view the corresponding fault/warning name in 200B-23h (Code of the selected fault), and view corresponding servo drive status parameters in 200B-24h (Time stamp of the selected fault) to 200B-2Bh (Output terminal status upon selected fault). If no fault occurs, the keypad displays "Er.000" in 200B-23h.

200B-23h viewed from the keypad is "Er.xxx", where "xxx" is the fault/warning code. The value of 200B-23h read through Inovance software tool or communication is decimal, which needs to be converted to a hexadecimal equivalent to indicate the actual fault/warning code. The following table gives examples of such conversion.

Er.xxx Displayed on Keypad	200B-23h (Decimal)	200B-23h (Hexadecimal)	Description
Er.101	257	0101	0: No.1 non-resettable fault 101: Fault code
Er.130	8496	2130	2: No.1 resettable fault 130: Fault code
Er.121	24865	6121	6: No.2 resettable fault 121: Fault code

Er.110	57616	E110	E: No.3 resettable warning 110: Warning code

11.3 Output of Fault and Warning Codes

11.3.1 List of Fault Codes

Display	Fault Name	Class	Resettable	Error Code (603Fh)	Auxiliary Code (203Fh)
Er.101	Parameter exception	NO.1	No	0x6320	0x01010101
Er.102	Programmable logic configuration fault	NO.1	No	0x7500	0x01020102
Er.103	FPGA software version too early	NO.1	No	0x7500	0x01030103
Er.104	Programmable logic interruption	NO.1	No	0x7500	0x01040104 0x01000104 0x0E940104
Er.105	Internal program abnormal	NO.1	No	0x6320	0x01050105
Er.108	Parameter storage fault	NO.1	No	0x5530	0x01080108
Er.111	Parameters in group 2000h/2001h abnormal	NO.1	No	0x6320	0x01110111
Er.120	Product model matching fault	NO.1	No	0x7122	0x01200120
Er.121	Inactive S-ON reference	NO.2	Yes	0x5441	0x01210121
Er.122	Product matching fault in absolute position mode	NO.1	No	0x7122	0x01200120
Er.130	Different DIs allocated with the same function	NO.1	Yes	0x6320	0x01300130
Er.131	Number of DO functions exceeding the limit	NO.1	Yes	0x6320	0x01310131
Er.136	Data check error or no parameter stored in the motor ROM	NO.1	No	0x7305	0x01360136
Er.200	Overcurrent 1	NO.1	No	0x2311	0x02000200
Er.201	Overcurrent 2	NO.1	No	0x2312	0x02010201
Er.207	D/Q shaft current overflow	NO.1	Yes	0x0FFF	0x02070207
Er.208	FPGA sampling operation timeout	NO.1	No	0x0FFF	0x02080208
Er.210	Output short-to-ground	NO.1	No	0x2330	0x02100210
Er.220	U, V, W Phase sequence error	NO.1	No	0x0FFF	0x02200220
Er.234	Runaway	NO.1	No	0x0FFF	0x02340234
Er.400	Main circuit overvoltage	NO.1	Yes	0x3210	0x04000400
Er.410	Main circuit undervoltage	NO.1	Yes	0x3220	0x04100410
Er.500	Motor overspeed	NO.1	Yes	0x8400	0x05000500
Er.510	Pulse output overspeed	NO.2	Yes	0x0FFF	0x05100510
Er.602	Angle auto-tuning failure	NO.1	Yes	0x0FFF	0x06020602
Er.610	Drive overload	NO.2	Yes	0x3230	0x06100610
Er.620	Motor overload	NO.2	Yes	0x3230	0x06200620
Er.630	Motor stall	NO.2	Yes	0x7121	0x06300630
Er.650	Heatsink overheat	NO.2	Yes	0x4210	0x06500650
Er.731	Encoder battery failure	NO.2	Yes	0x7305	0x07300731
Er.733	Encoder multi-turn counting error	NO.2	Yes	0x7305	0x07300732

Display	Fault Name	Class	Resetta-ble	Error Code (603Fh)	Auxiliary Code (203Fh)
Er.735	Encoder multi-turn counting overflow	NO.2	Yes	0x7305	0x07300733
Er.740	Encoder interference	NO.1	No	0x7305	0x07400740
Er.770	External encoder ruler fault	NO.1	Yes	0x7305	0x07700770
Er.834	AD sampling overvoltage	NO.2	Yes		
Er.A33	Encoder data abnormal	NO.1	No	0x7305	0x0A330A33
Er.A34	Encoder communication check abnormal	NO.1	No	0x7305	0x0A340A34
Er.A35	The Z signal is lost.	NO.1	No	0x7305	0x0A350A35
Er.B00	Excessive position deviation	NO.2	Yes	0x8611	0x0b000b00
Er.B02	Position deviation exceeding threshold in fully closed loop	NO.2	Yes	0x8611	0x0b020b02
Er.B03	Electronic gear ratio setting exceeding limit	NO.2	Yes	0x6320	0x0b030b03
Er.B04	Fully closed-loop parameter setting error	NO.2	Yes	0x6320	0x0B040B04
Er.D09	Incorrect software position upper and lower limit setting*	NO.2	Yes	0x6320	0x0d090d09
Er.D10	Home offset setting error*	NO.2	Yes	0x6320	0x0d100d10
Er.E08	Synchronization loss*	NO.2	Yes	0x0FFF	0x0E080E08
Er.E12	Network initialization failure*	NO.2	Yes	0x0E12	0x0E120E12
Er.E13	Sync period setting error*	NO.2	Yes	0x0E13	0x0E130E13
Er.E15	Excessive sync period error*	NO.2	Yes	0x0E15	0x0E150E15

11.3.2 List of Earning Codes

Display	Warning Name	Class	Resetta-ble	Error Code (603Fh)	Auxiliary Code (203Fh)
Er.110	Frequency-division pulse output setting error	NO.3	Yes	0x6320	0x01100110
Er.601	Homing timeout	NO.3	Yes	0x0FFF	0x06010601
Er.730	Encoder battery warning	NO.3	Yes	0x7305	0x07300730
Er.900	DI emergency braking	NO.3	Yes	0x5442	0x09000900
Er.909	Motor overload warning	NO.3	Yes	0x3230	0x09090909
Er.939	Motor power cable discon-nected	NO.3	Yes	0x3331	0x09390939
Er.941	Power-on required for pa-rameter modification	NO.3	Yes	0x6320	0x09410941
Er.942	Frequent parameter storage	NO.3	Yes	0x7600	0x09420942
Er.950	Forward overtravel warning	NO.3	Yes	0x5443	0x09500950
Er.952	Reverse overtravel warning	NO.3	Yes	0x5444	0x09520952
Er.980	Encoder internal fault	NO.3	Yes	0x7305	0x09800980
Er.998	Homing mode setting error	NO.3	Yes	0x0FFF	0x0E080E08
Er.A40	Parameter auto-tuning fail-ure	NO.3	Yes	0x0FFF	0x0A400A40

SDO transmission suspension code

Suspension Code	Function
0503 0000	Toggle unit not alternated
0504 0000	SDO protocol timed out
0504 0001	Client/server command word not valid or unknown
0504 0005	Memory overflow
0601 0000	Access to an object unsupported
0601 0001	Attempt to read a write-only object
0601 0002	Attempt to write a read-only object
0602 0000	Object not exist in the object dictionary
0604 0041	Object cannot be mapped to the PDO
0604 0042	The number and length of the objects to be mapped exceeds the PDO length
0604 0043	General parameter incompatibility
0604 0047	General internal incompatibility in the device
0606 0000	Access to an object failed due to a hardware error
0607 0010	Data type does not match. Length of service parameters does not match
0607 0012	Data type does not match. Length of service parameters too high
0607 0013	Data type does not match. Length of service parameters too short
0609 0011	Sub-index does not exist
0609 0030	Invalid value for the parameter
0609 0031	Value of parameter written too high
0609 0032	Value of parameter written too low
0609 0036	Maximum value is smaller than minimum value
0800 0000	General error
0800 0020	Data cannot be transmitted or stored to the application
0800 0021	Data cannot be transmitted or stored to the application due to local control
0800 0022	Data cannot be transmitted or stored to the application due to current device state
0800 0023	Object dictionary dynamic generation fails or no object dictionary is available
0800 0024	The value does not exist

11.4 Troubleshooting of Faults

11.4.1 Troubleshooting of Common Faults

1) Er.101: Abnormal internal parameters of servo drive

Cause:

The total number of parameters changes, which generally occurs after software update.

The actual parameter values in group 2002h and subsequent groups exceed the limit, which generally occurs after software update.

Cause	Method of Verification	Measure

1. The control power voltage drops instantaneously.	Check whether the control power voltage on the non-drive side is within the following specifications: Valid value: 380 V to 480 V Allowable deviation: –15% to +10%	Increase the power capacity or replace the power supply with one that has larger capacity. Restore default settings (set 2002-20h to 1) and write the parameters again.
2. Instantaneous power failure occurs during parameter storage.	Check whether instantaneous power failure occurs during parameter storage.	Power on the servo drive again, restore default settings (set 2002-20h to 1) and write the parameters again.
3. The times of parameter writing within a certain period exceeds the limit.	Check whether parameter update is performed frequently from the host controller.	Change the way of parameter-write and write the parameters again. Or replace the servo drive if it is faulty.
4. The software is upgraded.	Check whether the software is upgraded.	Reset the servo drive model and the motor model, and restore default settings (set 2002-20h to 1).
5. The servo drive is faulty.	If the fault persists after several times of restart and parameter initialization, the servo drive is faulty.	Replace the servo drive.

2) Er.102: Programmable logic configuration fault

Cause:

The software version of FPGA does not match that of MCU.

The FPGA or MCU hardware is damaged, resulting in communication failure between MCU and FPGA.

Cause	Method of Verification	Measure
1. The FPGA software version and the MCU software version do not match.	View the MCU software version (2001-01h) and the FPGA software version (2001-02h) through the keypad or Inovance software tool. Check whether the non-zero values of the most significant bits of these two software versions are consistent.	Contact Inovance for technical support. Update to the matching FPGA or MCU software.
2. The FPGA is faulty.	The fault persists after the servo drive is powered off and on several times.	Replace the servo drive.

3) Er.103: FPGA software version too early

Cause:

The FPGA version in 2001-02h is earlier than 0112.0 (the MCU version in 2001-01h is 0101.7 or later).

Cause	Method of Verification	Measure
1. The FPGA version in 2001-02h is earlier than 0112.0.	View the MCU software version (2001-01h) and the FPGA software version (2001-02h) through the keypad or Inovance software tool.	Update to the matching FPGA or MCU software.
2. The FPGA is faulty.	The fault persists after the servo drive is powered off and on several times.	Replace the servo drive.

4) Er.104: Programmable logic interruption

To distinguish the fault symptom, the servo drive displays different internal fault codes under the same external fault code. You can view these internal fault codes in 200B-2Eh.

Cause:

Access to MCU or FPGA times out.

Cause	Method of Verification	Measure
1. The FPGA is faulty (Er.104).	The fault persists after the servo drive is powered off and on several times.	Replace the servo drive.
2. The communication handshake between FPGA and MCU is abnormal (Er.100).		
3. The drive internal operation times out (Er.940).		

5) Er.105: Internal program abnormal

Cause:

The total number of parameters is abnormal at EEPROM read/write operation.

The data range of parameters is abnormal, which generally occurs after software update.

Cause	Method of Verification	Measure
1: An EEPROM fault occurs.	Check the causes according to the method of Er.101.	Restore default settings (set 2002-20h to 1) and power on the system again.
2. The servo drive is faulty.	The fault persists after the servo drive is powered off and on several times.	Replace the servo drive.

6) Er.108: Parameter storage fault

Cause:

Parameter values cannot be written to EEPROM.

Parameter values cannot be read from EEPROM.

Cause	Method of Verification	Measure
1. The parameter-write operation is abnormal.	Modify a parameter, power on the servo drive again and check whether the modification is saved.	If the modification is not saved and the fault persists after several times of restart, replace the servo drive.
2. The parameter reading is abnormal.		

7) Er.120: Product model matching fault

Cause:

The motor model and drive motor do not match or parameter setting is incorrect.

Cause	Method of Verification	Measure
1. The motor or servo drive SN does not exist.	200B-2Eh (Internal fault code) is set to 0120 or 1120. View the motor nameplate to check whether the motor is suitable. Check whether 2000-01h is set correctly.	Set 200D-01h (Motor SN) correctly according to the motor nameplate or replace with a matching motor.
	200B-2Eh (Internal fault code) is set to 2120.	If the servo drive SN does not exist, set it correctly according to the drive nameplate.
2. The power rating of the motor does not match that of the servo drive.	200B-2Eh (Internal fault code) is set to 3120.	-

8) Er.121: Invalid S-ON reference

Cause:

When some auxiliary functions are used, a redundant S-ON signal is given.

Cause	Method of Verification	Measure

1. The S-ON signal is switched on through communication when the servo drive is already enabled internally.	Check whether an S-ON signal is sent from the host controller when auxiliary functions (200D-03h, 200D-04h, and 200D-0Ch) are used.	Switch off the S-ON signal sent from the host controller.

9) Er.122: Product matching fault in absolute position mode

Cause:

The motor does not match in the absolute position mode or the motor SN is set incorrectly.

Cause	Method of Verification	Measure
The motor does not match in absolute position mode or the motor SN is set incorrectly.	View the motor nameplate to check whether the motor is configured with a multi-turn absolute encoder. Check whether 200D-01h (Motor SN) is set properly.	Set 200D-01h (Motor SN) correctly according to the motor nameplate or replace with a matching motor.

10) Er.136: Data check error or no parameter stored in the motor encoder ROM

Cause:

When reading parameters from the encoder ROM memory, the servo drive detects that no parameters are saved there or parameter values are incorrect.

Cause	Method of Verification	Measure
1. The model of the servo drive does not match that of the motor.	Check whether Inovance IS810 series servo drive and servo motor are used.	Use the matching servo drive and servo motor.
2. A parameter check error occurs or no parameter is saved in the ROM of the serial increment encoder.	Check whether Inovance standard encoder cable is used. The cable must be connected securely without scratching, breaking or poor contact. Measure signals PS+, PS–, +5 V, and GND at both ends of the encoder cable and observe whether signals at both ends are consistent. For the signal definition, see hardware connections.	Use the encoder cable provided by Inovance. Ensure tight connection of motor terminals and servo drive screws. Use a new encoder cable if necessary. Do not bundle encoder cables together with power cables (RST, UVW). Route encoder cables and power cables through different routes.
3. The servo drive is faulty.	The fault persists after the servo drive is powered off and on again.	Replace the servo drive.

11) Er.200: Overcurrent 1

Cause:

The feedback current of any phase exceeds the overcurrent threshold of the servo drive.

12) Er.201: Overcurrent 2

Cause:

Hardware overcurrent is detected.

Cause	Method of Verification	Measure
1. References are input simultaneously at servo startup or reference input is too quick.	Check whether an reference is input before the keypad displays "ry".	The time sequence is: after the keypad displays "ry", switch on the S-ON signal, and then input reference. Increase the reference filter time constant or the acceleration/deceleration time if allowed.

Cause	Method of Verification	Measure
2. The motor cables are in poor contact.	Check whether the servo drive power cables and power cables on the U, V, and W phases of the servo drive are loosened.	Tighten the cables that are loosened or disconnected.
3. The motor cables are grounded.	After ensuring that the servo drive power cables and motor cables are connected securely, measure whether the insulation resistance between the servo drive U, V, and W phases and the grounding (PE) cable is at MΩ-level.	Replace the motor in the case of poor insulation.
4. The motor U, V, and W phases are short circuited.	Unplug the motor cables and check whether short-circuit occurs among U, V, and W phases and whether burrs exist on the cable connections.	Connect motor cables correctly.
5. The motor is damaged.	Unplug the motor cables and measure whether the resistance among U, V, and W phases of the motor cable is balanced.	Replace the motor if the resistance is unbalanced.
6. The gain setting is improper and the motor oscillates.	Check whether the motor vibrates or generates a sharp noise during starting and running, or view the current feedback through the Inovance servo drive commissioning platform.	Adjust the gain.
7. The encoder cable is wired improperly, corroded or loosened.	Check whether the encoder cable provided by Inovance is used and whether the cable is aging, corroded, or loosened. Switch off the S-ON signal, rotate the motor shaft manually, and check whether the value of 200B-0Bh changes as the motor rotates.	Re-solder, tighten or replace the encoder cable.
8. The servo drive is faulty.	Unplug the motor cables and power on the servo drive again, but the fault persists.	Replace the servo drive.

13) Er.207: D/Q shaft current overflow

Cause:

The internal register of the servo drive overflows due to abnormal current feedback.

The internal register of the servo drive fails due to abnormal encoder feedback.

Cause	Method of Verification	Measure
1. The D/Q shaft current overflows.	If the fault persists after several times of restart, the servo drive is faulty.	Replace the servo drive.

14) Er.208: FPGA sampling operation timeout

Cause:

Find the cause through the internal fault code (200B-2Eh).

Cause	Method of Verification	Measure
1. MCU communication times out.	200B-2Eh (Internal fault code) is set to 1208. The internal chip is damaged.	Replace the servo drive.

2. Encoder communication times out.	200B-2Eh (Internal fault code) is set to 2208. The encoder wiring is incorrect. The encoder cable is loose. The encoder cable is too long. Communication with the encoder is interfered. The encoder is faulty.	Use cables provided by Inovance. If a customized encoder cable is used, check whether this cable complies with the specifications and whether it is a shielded twisted-pair cable. Check that the connectors at both ends of the encoder are in good contact. Contact Inovance. Do not bundle or route motor cables and encoder cables through the same route. Ensure the servo motor and servo drive are well grounded. Replace the servo motor.
3. Current sampling times out.	200B-2Eh (Internal fault code) is set to 3208. Check whether ambient devices are generating interference and whether multiple interference sources such as variable-frequency devices are present inside the cabinet. The internal current sampling chip is damaged.	Do not bundle or route motor cables and encoder cables through the same route. Replace the servo drive.
4. High-accuracy AD conversion times out.	200B-2Eh (Internal fault code) is set to 4208. Interference exists in the high-accuracy AI channel. Check AI wiring according to the correct wiring diagram.	Use shielded twisted pairs and shorten the circuit length.
5. The FPGA operation times out.	200B-2Eh (Internal fault code) is set to 0208. Locate the cause as instructed in the preceding cause items 1 to 4.	Locate the cause as instructed in the preceding cause items 1 to 4.

15) Er.210: Output short-circuit to ground

Cause:

The servo drive detects motor phase current or bus voltage abnormal during self-test at power-on.

Cause	Method of Verification	Measure
1. The U, V, or W phase of the servo drive power cables is shorted to ground.	Unplug the motor cable and measure whether the U, V, or W phase of the motor power cables is shorted to ground (PE).	Connect the cables again or replace the servo drive power cables.
2. The motor is shorted to the ground.	After ensuring that the servo drive power cables and motor cables are connected securely, measure whether the insulation resistance between the servo drive U, V, and W phases and the grounding (PE) cable is at MΩ-level.	Replace the motor.
3. The servo drive is faulty.	Remove the power cables from the servo drive. The fault persists after the servo drive is powered off and on several times.	Replace the servo drive.

16) Er.220: Phase sequence error

17) Er.234: Runaway

Cause:

In the torque control mode, the torque reference direction is reverse to the speed feedback direction.

In position or speed control mode, the speed feedback direction is reverse to the speed reference direction.

Cause	Method of Verification	Measure
1. The sequence of the U, V, or W phases is incorrect.	Check whether the servo drive power cables are connected in the correct sequence on both sides.	Connect the U, V, and W phases according to the correct sequence.
2. The initial phase of the motor rotator detected is incorrect due to interference at power-on.	The U, V, and W phase sequence is correct, but Er.234 occurs when the servo drive is enabled.	Power on the servo drive again.
3. The encoder model or wiring is incorrect.	View the servo drive and servo motor nameplates to check whether the equipment used is Inovance IS810 series servo drive and 20-bit or 23-bit servo motor.	Replace matching servo drive and servo motor. If you use Inovance IS810 series servo drive and 20-bit or 23-bit servo motor, set 2000-01h to 14000. Confirm the motor model, encoder type, and encoder cable connections again.
4. The encoder cable is wired improperly, corroded or loosened.	Check whether the encoder cable provided by Inovance is used and whether the cable is aging, corroded, or loosened. Switch off the S-ON signal, rotate the motor shaft manually, and check whether the value of 200B-0Bh changes as the motor rotates.	Re-solder, tighten or replace the encoder cable.
5. The gravity load is too large when the motor controls a vertical axis.	Check whether the load of the vertical axis is too large. Adjust the brake parameters 2002-0Ah to 2002-0Dh and then check whether the fault is removed.	Reduce the load of the vertical axis, increase the rigidity, or shield this fault without affecting safety and use.

18) Er.400: Main circuit overvoltage

Cause:

The DC bus voltage between P+ and N– exceeds the overvoltage threshold.

Normal value: 540 V
Fault value: 760 V

Cause	Method of Verification	Measure
1. The input voltage of the main circuit is too high.	Measure whether the input voltage on the power supply unit side (RST) of the servo drive complies with the following specifications: Valid value: 380 V to 480 V Allowable deviation: –15% to +10%	Replace or adjust the power supply according to the specifications.
2. The power supply is instable or affected by the lightning.	Monitor whether the power supply of the servo drive is stable, affected by lightning or satisfies the preceding specifications.	Connect a surge protection device and then switch on the power supply. If the fault persists, replace the servo drive.
3. The resistance of the external braking resistor is too large, and energy absorption during braking is insufficient.	Measure the resistance of the external braking resistor between P and C and compare the measured value with the recommended value.	Connect a new external braking resistor of recommended resistance between P and C. Set 2002-1Bh (Power of external braking resistor) and 2002-1Ch (Resistance of external braking resistor) according to the specifications of the external braking resistor in use.
4. The motor is in abrupt acceleration/deceleration status. The maximum braking energy exceeds the energy absorption value.	Confirm the acceleration/deceleration time during running and measure whether the DC bus voltage between P+ and N– exceeds the fault threshold during deceleration.	Ensure the input voltage of the main circuit is within the specified range, and then increase the acceleration/deceleration time within the allowable range.

Cause	Method of Verification	Measure
5. The bus voltage sampling value has a large deviation from the actually measured value.	Check the deviation between the setpoint of 200B-1Bh (Bus voltage) and the actually measured value.	Contact Inovance for technical support.
7. The servo drive is faulty.	The fault persists after the main circuit is powered off and on several times.	Replace the servo drive.

19) Er.410: Main circuit undervoltage

Cause:

The DC bus voltage is lower than the undervoltage threshold.

Normal value: 540 V
Fault value: 350 V

Cause	Method of Verification	Measure
1. The power supply of the main circuit is instable or power failure occurs.	Measure the RST input voltage on the servo drive side and check whether the input voltage complies with the following specifications. Valid value: 380 V to 480 V Allowable deviation: –15% to +10% The voltage of all the three phases needs to be measured.	Increase the power capacity.
2. Instantaneous power failure occurs.		
3. The power voltage drops during running.	Monitor the power input voltage and check whether the main circuit power supply is applied to other devices, resulting in insufficient power capacity and voltage drop.	

20) Er.500: Overspeed

Cause:

The actual speed of the servo motor exceeds the overspeed threshold.

Cause	Method of Verification	Measure
1. The sequence of the U, V, or W phases is incorrect.	Check whether the servo drive power cables are connected in the correct sequence at both sides.	Connect the U, V, and W phases according to the correct sequence.
2. 200A-09h is set incorrectly.	Check whether the overspeed threshold is smaller than the actual maximum motor speed. Overspeed threshold = 1.2 times maximum motor speed (200A-09h set to 0) Overspeed threshold = 200A-09h (200A-09h ≠ 0, and 200A-09h < 1.2 times the maximum motor speed).	Reset the overspeed threshold according to the mechanical requirements.

3. The input reference is higher than the overspeed threshold.	Check whether the motor speed corresponding to the input reference exceeds the overspeed threshold. Position control mode: In the CSP mode, check the gear ratio 6091-01h/6091-02h to check the position reference increment for a single sync period and convert it to speed. In the PP mode, check the gear ratio 6091-01h/6091-02h and check the value of 6081h (Profile velocity). In the HM mode, check the gear ratio 6091-01h/6091-02h and determine 6099-01h and 6099-02h. Speed mode: View the gear ratio 6091h and the values of 60FFh (Target velocity), 2006-07h to 2006-0Ah, and 607Fh (Max. profile velocity). Torque control mode: View the value of 2007-12h (Speed limit source) and the corresponding speed limit value.	Position control mode: CSP: Decrease the position reference increment for a single sync period, and the host controller needs to perform position ramp additionally when generating references. PP: Decrease the value of 6081h or increase the acceleration/deceleration ramp (6083h or 6084h). HM: Decrease the value of 6099-01h and 6099-02h or increase the acceleration/deceleration ramp (609Ah). Decrease the gear ratio according to the actual conditions. Speed control mode: Decrease the target speed, speed limit, and gear ratio. In the PV mode, increase the speed ramp 6083h and 6084h. In the CSV mode, the host controller should cover the speed ramp. Torque control mode: Set the speed limit to a value smaller than the overspeed threshold.
4. The motor speed overshoots.	Check whether the speed feedback exceeds the overspeed threshold through the Inovance drive commissioning platform.	Adjust the gain or mechanical running conditions.
5. The servo drive is faulty.	The fault persists after the servo drive is powered on again.	Replace the servo drive.

21) Er.602: Angle auto-tuning failure

22) Er.610: Servo drive overload

Cause:

Heat accumulation of the servo drive reaches the fault level.

23) Er.630: Overtemperature protection in motor rotor locked

Cause:

The actual speed of the motor is lower than 10 RPM but the torque reference reaches the limit, and such status lasts for the time set in 200A-21h.

Cause	Method of Verification	Measure
1. The servo drive has loss of phases U, V, or W or the phase sequence is incorrect.	Perform motor trial run without load and check cable connections.	Connect cables again according to the correct wiring diagram or replace the cables.
2. The U, V, or W phase cable of the servo drive or the encoder cable are disconnected.	Check cable connections.	Connect cables again according to the correct wiring diagram or replace the cables.

3. The motor rotor is locked due to mechanical factors.	Check the running command and motor speed (200B-01h) through Inovance software tool or the keypad. Running reference in the position mode: 200B-0Eh (Input position reference counter) Running reference in the speed mode: 200B-02h (Speed reference) Running reference in the torque mode: 200B-03h (Internal torque reference) Check that the running reference is not 0 but the motor speed is 0 in corresponding mode.	Eliminate mechanical factors.

24) Er.650: Heatsink overheat

Cause:

The temperature of the servo drive power module is higher than the over-temperature protection threshold.

Cause	Method of Verification	Measure
1. The ambient temperature is too high.	Measure the ambient temperature.	Improve the cooling conditions of the servo drive to reduce the ambient temperature.
2. The servo drive is powered off and powered on for several times to reset the overload fault.	View the fault records (set 200B-22h and view 200B-23h) and check whether an overload fault or warning (Er.610, Er.620, Er.630, Er.650, Er.909, Er.920, or Er.922) occurs.	Change the fault reset method. After overload occurs, wait for 30s before reset. Increase the capacity of the servo drive and servo motor, increase the acceleration/deceleration time, and reduce the load.
3. The fan is damaged.	Check whether the fan works when the motor runs.	Replace the servo drive.
4. The installation clearance of the servo drive is improper.	Check whether the top and bottom vents of the drive and the air filter are smooth.	Install the servo drive according to the installation requirements.
5. The servo drive is faulty.	The fault persists even though the servo drive is restarted 5 minutes after power-off.	Replace the servo drive.

25) Er.731: Encoder battery failure

Cause:

The battery voltage of the absolute encoder is lower than 3.0 V.

Cause	Method of Verification	Measure
The battery is not connected during power-off.	Check whether the encoder battery is connected during power-off.	Set 200D-15h to 1 to remove the fault.
The encoder battery voltage is too low.	Measure the battery voltage.	Replace with a new battery of matching voltage.

26) Er.733: Encoder multi-turn counting error

Cause:

Encoder multi-turn counting error

Cause	Method of Verification	Measure
The encoder is faulty.	Set 200D-15h to 2 to clear the fault. Er.733 persists after the servo drive is powered on again.	Replace the motor.

27) Er.735: Encoder multi-turn counting overflow

Cause:

Encoder multi-turn counting overflows.

Cause	Method of Verification	Measure
Encoder multi-turn counting overflows when 2002-02h is set to 1.	-	Set 200D-15h to 1 to remove the fault and power on the system again.

28) Er.740: Encoder interference

Cause:

The Z signal of the encoder has a too large change of electrical angle due to interference.

Cause	Method of Verification	Measure
1. The encoder wiring is incorrect.	Check the encoder wiring.	Connect the cables again according to the correct wiring diagram.
2. The encoder cables are loose.	Check whether on-site vibration is too large, which loosens the encoder cable and even damages the encoder.	Connect the cables again and ensure that encoder terminals are connected securely.
3. The encoder is faulty.	Replace with a new encoder cable. If the fault no longer occurs after cable replacement, it indicates the original encoder cable is damaged. Keep the motor in a certain position, power on the servo drive several times and check the change of 200B-0Bh (Electrical angle). The electrical angle deviation should be within ±30°.	Use a new encoder cable. If the fault persists after the encoder cable is replaced, the encoder may be faulty. In this case, replace the servo motor.

29) Er.834: AD sampling overvoltage

Cause:

■ The AI sampling value is greater than 11.5 V.

Cause	Method of Verification	Measure
1. The AI voltage is too high.	◆ Measure the voltage input from AI and check whether the AI sampling voltage (H0B-21 or H0B-22) is greater than 11.5 V.	Adjust the AI input voltage and view the AI sampling voltage until the AI sampling voltage does not exceed 11.5 V.
2. The AI wiring is incorrect or interference exists.	◆ Check AI wiring according to the correct wiring diagram.	Use shielded twisted pairs and shorten the circuit length. Increase the AI filter time constant: AI1 filter time constant: H03-51 AI2 filter time constant: H03-56

30) Er.A33: Encoder data abnormal

Cause:

Internal parameters of the encoder are abnormal.

Cause	Method of Verification	Measure
1. The serial incremental encoder cable is disconnected or loosened.	Check cable connections.	Check whether the encoder cable is connected improperly, disconnected or in poor contact. Route the motor cables and encoder cables through different routes if they are bundled together.
2. The serial incremental encoder parameter write/read is abnormal.	If the fault persists after the servo drive is powered off and on several times, the encoder is faulty.	Replace the servo motor.

31) Er.A34: Encoder communication check abnormal

Cause:

After power-on, an error occurred when reading initial phase information of rotor of the incremental encoder.

Cause	Method of Verification	Measure
1. The model of the servo drive does not match that of the motor.	View the servo drive and servo motor nameplates to check whether the equipment used is Inovance IS810 series servo drive and 20-bit or 23-bit servo motor. Check whether 2000-01h (Motor SN) is set to 14000.	Replace matching servo drive and servo motor.
2. The encoder cable is damaged.	Check whether the encoder cable breaks and whether connection of servo drive and connection of servo motor are secure.	Replace a new encoder cable and secure wirings.

32) Er.B00: Excessive position deviation

Cause:

In the position control mode, the position deviation is greater than the setting of 6065h.

Cause	Method of Verification	Measure
1. The servo drive has loss of phases U, V, or W or the phase sequence is incorrect.	Perform motor trial run without load and check cable connections.	Connect cables again according to the correct wiring diagram or replace the cables.
2. The U, V, or W phase cable of the servo drive or the encoder cable are disconnected.	Check cable connections.	Connect the cables again. Check whether the servo motor power cables are in the same phase sequence as the servo drive cables. Replace all the cables with new cables if necessary and ensure all the cables are connected securely.
3. The motor rotor is locked due to mechanical factors.	Check the running command and motor speed (200B-01h) through Inovance software tool or the keypad. Running reference in the position mode: 200B-0Eh (Input position reference counter) Running reference in the speed mode: 200B-02h (Speed reference) Running reference in the torque mode: 200B-03h (Internal torque reference) Check that the running reference is not 0 but the motor speed is 0 in corresponding mode.	Eliminate mechanical factors.
4. The servo drive gain is too low.	Check the position loop gain and speed loop gain of the servo drive: 1st gain: 2008-01h to 2008-03h 2nd gain: 2008-04h to 2008-06h	Adjust the gain manually or perform gain auto-tuning.

5. The position reference increment is too large.	Position control mode: In the CSP mode, check the gear ratio 6091-01h/6091-02h to check the position reference increment for a single sync period and convert it to speed. In the PP mode, check the gear ratio 6091-01h/6091-02h and check the value of 6081h (Profile velocity). In the HM mode, check the gear ratio 6091-01h/6091-02h and determine 6099-01h and 6099-02h.	CSP: Decrease the position reference increment for a single sync period, and the host controller needs to perform position ramp additionally when generating references. PP: Decrease the value of 6081h or increase the acceleration/deceleration ramp (6083h or 6084h). HM: Decrease the value of 6099-01h and 6099-02h or increase the acceleration/deceleration ramp (609Ah). Decrease the gear ratio according to the actual conditions.
6. Relative to the running condition, 6065h (Threshold of excessive position deviation) is too small.	Check whether 6065h is set to a too small value.	Increase the value of 6065h.
7. The servo drive or motor is faulty.	Monitor the running waveform through the oscilloscope function in the software tool: position reference, position feedback, speed reference, and torque reference.	If the position reference is not 0, but the position feedback is always 0, replace the servo drive or motor.

33) Er.B02: Excessive position deviation in fully closed-loop mode

Cause:

The absolute value of position deviation in fully closed-loop exceeds 200F-09h (Threshold of excessive position deviation in fully closed-loop mode).

Cause	Method of Verification	Measure
1. The servo drive has loss of phases U, V, or W or the phase sequence is incorrect.	Perform motor trial run without load and check cable connections.	Connect cables again according to the correct wiring diagram or replace the cables.
2. The U, V, or W phase cables of the servo drive or the internal/external encoder cables are disconnected.	Check cable connections.	Connect the cables again. Check whether the servo motor power cables are in the same phase sequence as the servo drive cables. Replace all the cables with new cables if necessary and ensure all the cables are connected securely.
3. The motor rotor is locked due to mechanical factors.	Check the running command and motor speed (200B-01h) through Inovance software tool or the keypad. Running reference in the position mode: 200B-0Eh (Input position reference counter) Running reference in the speed mode: 200B-02h (Speed reference) Running reference in the torque mode: 200B-03h (Internal torque reference) Check that the running reference is not 0 but the motor speed is 0 in corresponding mode.	Eliminate mechanical factors.
4. The servo drive gain is too low.	Check the position loop gain and speed loop gain of the servo drive: 1st gain: 2008-01h to 2008-03h 2nd gain: 2008-04h to 2008-06h	Adjust the gain manually or perform gain auto-tuning.
5. The position reference increment is too large.	Position control mode: In the CSP mode, check the gear ratio 6091-01h/6091-02h to check the position reference increment for a single sync period and convert it to speed. In the PP mode, check the gear ratio 6091-01h/6091-02h and check the value of 6081h (Profile velocity). In the HM mode, check the gear ratio 6091-01h/6091-02h and determine 6099-01h and 6099-02h.	CSP: Decrease the position reference increment for a single sync period, and the host controller needs to perform position ramp additionally when generating references. PP: Decrease the value of 6081h or increase the acceleration/deceleration ramp (6083h or 6084h). HM: Decrease the value of 6099-01h and 6099-02h or increase the acceleration/deceleration ramp (609Ah). Decrease the gear ratio according to the actual conditions.
6. Relative to the running condition, 200F-09h is too small.	Check whether 200F-09h is set to a too small value.	Increase the value of 200F-09h.

7. The servo drive or motor is faulty.	Monitor the running waveform through the oscilloscope function in the software tool: position reference, position feedback, speed reference, and torque reference.	If the position reference is not 0, but the position feedback is always 0, replace the servo drive or motor.

34) Er.B03: Electronic gear ratio setting exceeding limit

Cause:

Any electronic gear ratio exceeds the limit: (0.001 x Encoder resolution/10,000, 4,000 x Encoder resolution/10,000).

Cause	Method of Verification	Measure
1. The set electronic gear ratio exceeds the preceding limit.	The ratio of 6091-01h/6091-02h must be within the preceding limit.	Set the gear ratio within the required range.
2. Parameters are modified in incorrect sequence.	The gear ratio is within the preceding limit but this error occurs during modifying the gear ratio.	Reset the fault or power on the servo drive again.

35) Er.B04: Parameter setting error in Fully closed-loop mode

Cause:

When the fully closed-loop function is used and the position reference source is internal position reference, switchover between internal encoder feedback and external encoder feedback is enabled.

Cause	Method of Verification	Measure
In the fully closed-loop position mode, the position reference source is internal position reference, but switchover between internal encoder feedback and external encoder feedback is enabled.	Check whether 200F-01h is set to 2. Check whether the position reference source is internal position reference: multi-position and interrupt positioning.	In the fully closed-loop mode, when the position reference source is internal position reference, only external encoder feedback can be used, that is, 200F-01h must be set to 1.

36) Er.730: Encoder battery warning

Cause:

The battery voltage of the absolute encoder is lower than 3.0 V.

Cause	Method of Verification	Measure
1. The battery voltage of the absolute encoder is lower than 3.0 V.	Measure the battery voltage.	Replace with a new battery of matching voltage.

37) Er.939: Motor power cable disconnected

Cause:

The actual phase current of the motor is smaller than 10% of the rated current and the actual motor speed is small but the internal torque reference is very large.

Cause	Method of Verification	Measure
Motor power cable disconnected	Check whether the difference between 200B-19h (RMS value of phase current) and 200B-03h (Internal torque reference) is over 500% and whether 200B-01 (Actual motor speed) is smaller than one-fourth of the rated motor speed.	Re-connect the motor power cables. Use new cables if necessary.

38) Er.941: Parameter modifications activated at next power-on

Cause:

Modifications of some parameters take effect only after the servo drive is powered on again. After these parameters are modified, the servo drive reminds users to restart.

Cause	Method of Verification	Measure
The parameters modified are those whose modifications will take effect at next power-on.	Check whether parameters whose modification takes effect at next power-on have been modified.	Power on the servo drive again.

39) Er.942: Frequent parameter storage

Cause:

More than 200 parameters are modified at a time.

Cause	Method of Verification	Measure

A great number of parameters are modified and saved frequently to EEPROM (200C-0Eh set to 1).	Check whether parameters are modified frequently and quickly from the host controller.	Check the operation mode. For parameters that need not be stored in EEPROM, set 200C-0Eh to 0 before the writing operation of the host controller.

40) Er.980: Encoder internal fault

Cause:

An encoder algorithm error occurs. A communication error occurred when the drive FPGA judges the absolute position zero.

Cause	Method of Verification	Measure
Encoder internal fault	If the fault persists after the servo drive is powered off and on several times, the encoder is faulty.	Replace the servo motor.

41) Er.998: Homing mode setting error

Cause:

0x6098h (Homing mode) is set incorrectly.

Cause	Method of Verification	Measure
1. When homing is enabled, 6098h is set to 15, 16, 31, or 32, which disables homing.	View the value of 6098h.	Set 6098h correctly.

11.4.2 Internal Fault

When any of the following faults occurs, contact Inovance for technical support.

Er.602: Angle auto-tuning failure

Er.220: Phase sequence error

Er.A40: Parameter auto-tuning failure

Er.111: Internal servo drive parameter abnormal

11.4.3 Rectification of Communication Faults

Methods for eliminating faults of the IS810 series servo drive are described above. This section describes how to rectify communication faults.

1) Er.d09: Software position upper and lower limit setting error

Cause: The lower limit of software position is larger than the upper limit.

Cause	Method of Verification	Measure
1. The software position upper and lower limit are set incorrectly.	View the value of 0x607D-01h and 0x607D-02h.	Set 0x607D correctly so that 607D-1h is smaller than 607D-2h.

2) Er.d10: Home offset setting error

Cause: The lower limit of software position is larger than the upper limit.

Cause	Method of Verification	Measure
1. The home offset is outside the software position upper or lower limit.	View the value of 0x607D-01h, 0x607D-02h, and 0x607Ch.	Set 0x607D correctly and ensure 0x607D-01h ⩽ 0x607Ch ⩽ 0x607D-02h.

3) Er.E08: Synchronization loss

Cause: The master’ s synchronization signal is lost during communication.

Cause	Method of Verification	Measure
1. The master's synchronization signal is lost during communication.	Check whether a shielded twisted-pair communication cable is used. Check whether the servo drive is well grounded.	Use a shielded twisted-pair communication cable. Ground the servo drive according to the standard. Set the synch cycle, and switch the EtherCAT communication state machine of the drive to the running state. If there is a large error in the master sync period, modify the permissible interruption loss times (200C-24h) of the master or slave.

Er.E12: Network initialization failure Cause: Network initialization fails.

Cause	Method of Verification	Measure
1. The FPGA firmware is not programmed.	Check whether 2001-02h is set to 01XX.Y.	Program the FPGA firmware.
2. The device configuration file is not programmed.	After connecting the servo drive to the master, check whether the first left LED on the keypad displays the states of the corresponding network port, and the second LED displays a number among 1, 2, 4, and 8.	Program the device configuration file.
3. The servo drive is faulty.	The servo drive is faulty.	Replace the servo drive.

4) Er.E13: Sync period configuration error

Cause: After the system switches over to the operation mode, the sync period is not an integral multiple of 125 μs or 250 μs.

Cause	Method of Verification	Measure
1. The sync period is not an integral multiple of 125 μs or 250 μs.	Check the setting of the synchronization cycle in the controller.	Modify the sync period to an integral multiple of 125 μs or 250 μs.

5) Er.E15: Excessive sync period error

Cause: The sync period error exceeds the threshold.

Cause	Method of Verification	Measure
The sync period error of the controller is too large.	Measure the "Synchronization cycle" of the controller through a digital oscilloscope or the oscilloscope tool in the software tool.	Increase the value of 200C-2Dh and perform the test again. If Er.E15 still occurs, set 200C-2Ch to 2.

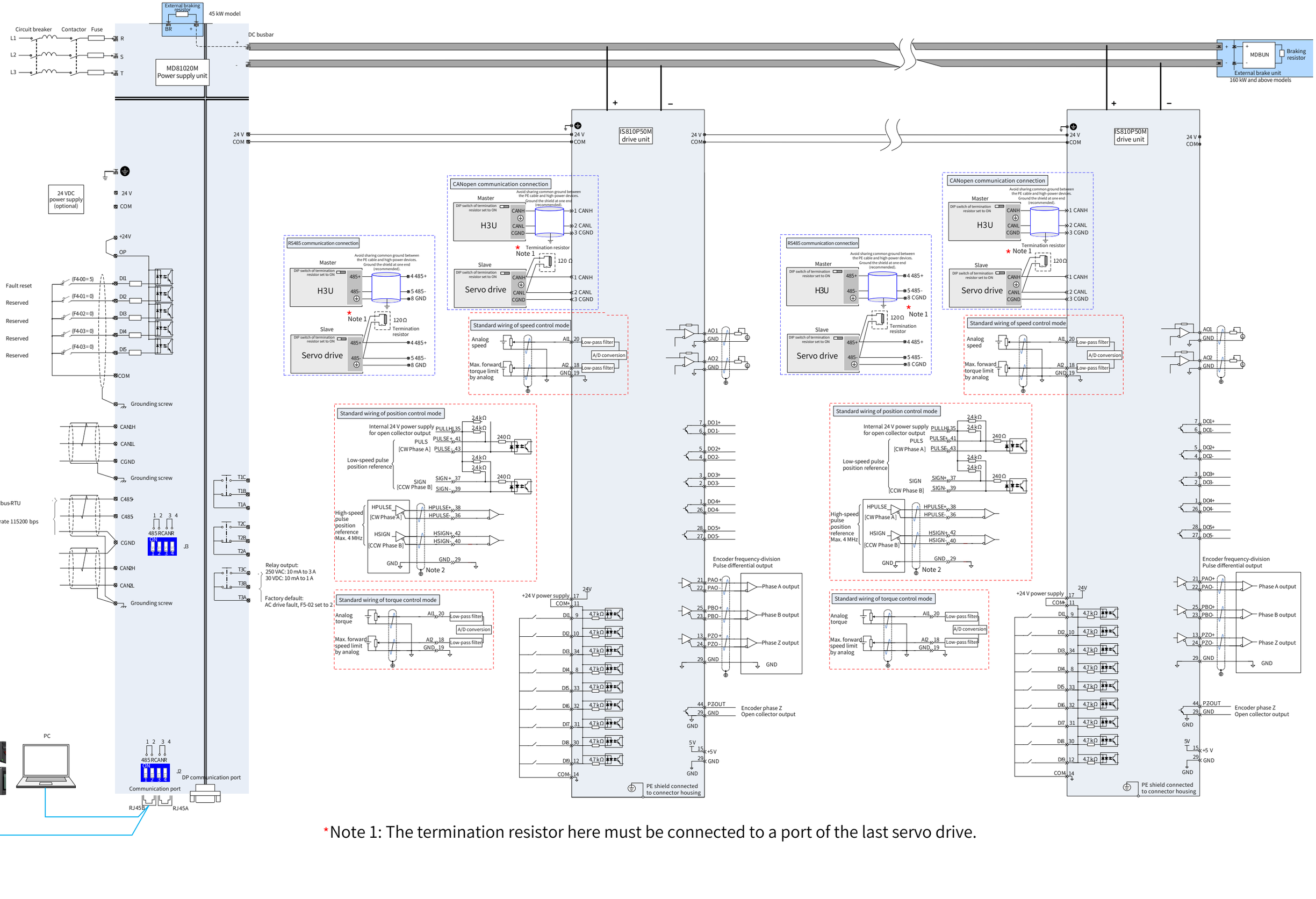

*Note 1: The termination resistor here must be connected to a port of the last servo drive.

19011887A00

Copyright © Shenzhen Inovance Technology Co., Ltd.

Shenzhen Inovance Technology Co., Ltd.

www.inovance.com

Add.: Inovance Headquarters Tower, High-tech Industrial Park, Guanlan Street, Longhua New District, Shenzhen
Tel: (0755) 2979 9595 **Fax:** (0755) 2961 9897
Customer service: 4000-300124

Suzhou Inovance Technology Co., Ltd.

www.inovance.com

Add.: No. 16 Youxiang Road, Yuexi Town, Wuzhong District, Suzhou 215104, P.R. China
Tel: (0512) 6637 6666 **Fax:** (0512) 6285 6720
Customer service: 4000-300124