590 Series DC Digital Converter

Product Manual

HA467078 Issue 7

Compatible with Version 4.x Software

© Copyright 2007 Parker SSD Drives, a division of Parker Hannifin Ltd.

All rights strictly reserved. No part of this document may be stored in a retrieval system, or transmitted in any form or by any means to persons not employed by a Parker SSD Drives company without written permission from Parker SSD Drives, a division of Parker Hannifin Ltd . Although every effort has been taken to ensure the accuracy of this document it may be necessary, without notice, to make amendments or correct omissions. Parker SSD Drives cannot accept responsibility for damage, injury, or expenses resulting therefrom.

WARRANTY

Parker SSD Drives warrants the goods against defects in design, materials and workmanship for the period of 12 months from the date of delivery on the terms detailed in Parker SSD Drives Standard Conditions of Sale IA058393C.

Parker SSD Drives reserves the right to change the content and product specification without notice.

Safety Information

Requirements

IMPORTANT: Please read this information BEFORE installing the equipment.

Intended Users

This manual is to be made available to all persons who are required to install, configure or service equipment described herein, or any other associated operation.

The information given is intended to highlight safety issues, EMC considerations, and to enable the user to obtain maximum benefit from the equipment.

Complete the following table for future reference detailing how the unit is to be installed and used.

INSTALLATION DETAILS	
Serial Number ***(see product label)***	
Where installed ***(for your own information)***	
Unit used as a: ***(refer to Certification for the Inverter)***	❑ Component ❑ Relevant Apparatus
Unit fitted:	❑ Wall-mounted ❑ Enclosure

Application Area

The equipment described is intended for industrial motor speed control utilising AC induction or AC synchronous machines.

Personnel

Installation, operation and maintenance of the equipment should be carried out by qualified personnel. A qualified person is someone who is technically competent and familiar with all safety information and established safety practices; with the installation process, operation and maintenance of this equipment; and with all the hazards involved.

Product Warnings

	Caution Risk of electric shock		**Caution** Refer to documentation		**Earth/Ground** Protective Conductor Terminal

Safety Information

Hazards

DANGER! - Ignoring the following may result in injury

1. This equipment can endanger life by exposure to rotating machinery and high voltages.
2. The equipment must be permanently earthed due to the high earth leakage current, and the drive motor must be connected to an appropriate safety earth.
3. Ensure all incoming supplies are isolated before working on the equipment. Be aware that there may be more than one supply connection to the drive.
4. There may still be dangerous voltages present at power terminals (motor output, supply input phases, DC bus and the brake, where fitted) when the motor is at standstill or is stopped.
5. For measurements use only a meter to IEC 61010 (CAT III or higher). Always begin using the highest range. CAT I and CAT II meters must not be used on this product.
6. Allow at least 5 minutes for the drive's capacitors to discharge to safe voltage levels (<50V). Use the specified meter capable of measuring up to 1000V dc & ac rms to confirm that less than 50V is present between all power terminals and earth.
7. Unless otherwise stated, this product must NOT be dismantled. In the event of a fault the drive must be returned. Refer to "Routine Maintenance and Repair".

WARNING! - Ignoring the following may result in injury or damage to equipment

SAFETY

Where there is conflict between EMC and Safety requirements, personnel safety shall always take precedence.

- Never perform high voltage resistance checks on the wiring without first disconnecting the drive from the circuit being tested.
- Whilst ensuring ventilation is sufficient, provide guarding and /or additional safety systems to prevent injury or damage to equipment.
- When replacing a drive in an application and before returning to use, it is essential that all user defined parameters for the product's operation are correctly installed.
- All control and signal terminals are SELV, i.e. protected by double insulation. Ensure all external wiring is rated for the highest system voltage.
- Thermal sensors contained within the motor must have at least basic insulation.
- All exposed metalwork in the Inverter is protected by basic insulation and bonded to a safety earth.
- RCDs are not recommended for use with this product but, where their use is mandatory, only Type B RCDs should be used.

EMC

- In a domestic environment this product may cause radio interference in which case the user may be required to take adequate counter-measures.
- This equipment contains electrostatic discharge (ESD) sensitive parts. Observe static control precautions when handling, installing and servicing this product.
- This is a product of the restricted sales distribution class according to IEC 61800-3. It is designated as "professional equipment" as defined in EN61000-3-2. Permission of the supply authority shall be obtained before connection to the low voltage supply.

CAUTION!

APPLICATION RISK

- The specifications, processes and circuitry described herein are for guidance only and may need to be adapted to the user's specific application. We can not guarantee the suitability of the equipment described in this Manual for individual applications.

RISK ASSESSMENT

Under fault conditions, power loss or unintended operating conditions, the drive may not operate as intended.
In particular:

- Stored energy might not discharge to safe levels as quickly as suggested, and can still be present even though the drive appears to be switched off
- The motor's direction of rotation might not be controlled
- The motor speed might not be controlled
- The motor might be energised

A drive is a component within a drive system that may influence its operation or effects under a fault condition.
Consideration must be given to:

- Stored energy
- Supply disconnects
- Sequencing logic
- Unintended operation

Cont.4

Contents

Contents *Page*

Chapter 1 GETTING STARTED

Introduction 1-1
Equipment Inspection and Storage 1-2
Packaging and Lifting Details 1-2
About this Manual 1-2
Initial Steps 1-2
How the Manual is Organised 1-3

Chapter 2 AN OVERVIEW OF THE CONVERTER

How it Works 2-1
Component Identification 2-2
Control Features 2-3
Understanding the Product Code 2-4

Chapter 3 INSTALLING THE CONVERTER

Mechanical Installation 3-1
Mounting the Converter 3-2
- Ventilation and Cooling Requirements 3-2
- AC Line Choke 3-2

Electrical Installation 3-3
Minimum Connection Requirements 3-4
- Protective Earth Connections (PE) 3-6
- Power Wiring Connections 3-7
- Control Wiring Connections 3-10

Motor Field Connections 3-14
- Internal/External Supply 3-14
- Power Board - PCB Reference 385851 3-14
- Power Board - PCB Reference 385621 3-15
- Power Board - PCB Reference 385128 3-16

DC Contactor - External VA Sensing 3-16
- Power Board - PCB Reference 385851 3-16
- Power Board - PCB Reference 385621 3-17

External AC Supply EMC Filter Installation 3-17
Earth Fault Monitoring Systems 3-19

Installation Drawings 3-20
Converter Installation Drawings 3-20
External Stack Installation Drawings 3-30
Filter Installation Drawings 3-33
AC Line Choke Installation Drawing 3-40
590 Capacitor Box 3-41

Contents

Contents *Page*

Chapter 4 OPERATING THE CONVERTER

Pre-Operation Checks 4-1
Setting-up the Converter 4-2
Calibration 4-2
Switchable Calibration Panel 4-2
Analog Tacho Calibration Option Board 4-3
Microtach/Encoder Feedback Option Board 4-3
Selecting Speed Feedback 4-4
Initial Start-up Routine 4-5
Performance Adjustment 4-11
Current Loop - The Autotune Feature 4-11
Speed Loop 4-11
Starting and Stopping Methods 4-12
Stopping Methods 4-12
Normal Stop (C3) 4-13
Program Stop (B8) 4-15
Coast Stop (B9) 4-16
Standstill 4-16
The Trip Condition 4-16
Normal Starting Method 4-17
Advanced Starting Methods 4-17
Starting Several Converters Simultaneously 4-17
Jog 4-17
Crawl 4-17

Chapter 5 THE MAN-MACHINE INTERFACE (MMI)

Introducing the MMI 5-1
Welcome Screen 5-1
Using the MMI 5-1
Control Keys 5-1
Keys for Programming the Converter 5-1
LED Indications 5-2
The Menu System 5-3
Navigating the Menu System 5-3
The Menu System Map 5-4
Changing a Parameter Value 5-5
Alarm Message Displays 5-5
Quick Diagnostics 5-5
Special Key Combinations 5-5
Special Menu Features 5-5

Cont.6

Contents

Contents *Page*

Menu Viewing Levels 5-5
Selecting the Display Language 5-5
Password Protection 5-6
To Activate Password Protection 5-6
To Deactivate Password Protection 5-6
To Reactivate Password Protection 5-6
How to Save, Restore and Copy your Settings 5-7
Saving Your Application 5-7
Restoring Saved Settings 5-7
Copying an Application 5-7

Chapter 6 PROGRAMMING YOUR APPLICATION

Programming with Block Diagrams 6-1
Modifying a Block Diagram 6-1
Configuration and Parameterisation Modes 6-1
Making and Breaking Links in Configuration Mode 6-1
Programming Rules 6-1
Saving Your Modifications 6-2
Understanding the Function Block Description 6-2
MMI Menu Maps 6-2
Hexadecimal Representation of Trips 6-3
Function Block Descriptions 6-4
ANALOG INPUTS 6-5
ANALOG OUTPUTS 6-7
AUX I/O 6-8
AUX PORT P2 6-10
CALIBRATION 6-11
CURRENT LOOP 6-14
CURRENT PROFILE 6-17
DIAGNOSTICS 6-18
DIAMETER CALC. 6-22
DIGITAL INPUTS 6-24
DIGITAL OUTPUTS 6-26
FIELD CONTROL 6-27
INHIBIT ALARMS 6-30
JOG/SLACK 6-32
LINK 11 & LINK 12 6-34
MAIN PORT P1 6-36
MENUS 6-37
miniLINK 6-38

Cont.7

Contents

Contents *Page*

PID 6-39
RAISE/LOWER 6-42
RAMPS 6-44
SETPOINT SUM 1 6-48
SETPOINT SUM 2 6-49
SPEED LOOP 6-51
ADVANCED 6-55
STANDSTILL 6-56
STOP RATES 6-57
SYSTEM PORT P3 6-59
TAPER CALC. 6-60
TENS+COMP CALC. 6-61
TORQUE CALC. 6-63
USER FILTER 6-64

Chapter 7 TRIPS AND FAULT FINDING

Trips 7-1
What Happens when a Trip Occurs 7-1
MMI Indications 7-1
Resetting a Trip Condition 7-1
Alarm Messages 7-1
LAST ALARM 7-2
HEALTH WORD 7-2
HEALTH STORE 7-2
Using the MMI to Manage Trips 7-2
Trip Messages 7-2
Symbolic Alarm Messages 7-4
Self Test Alarms 7-5
Setting Trip Conditions 7-5
Viewing Trip Conditions 7-5
Inhibiting Alarms 7-5
Fault Finding 7-6
Test Points 7-6

Contents

Contents *Page*

Chapter 8 ROUTINE MAINTENANCE AND REPAIR

Routine Maintenance 8-1
Repair 8-1
Saving Your Application Data 8-1
Returning the Unit to Parker SSD Drives 8-1
Technical Support Checks 8-2

Chapter 9 CONTROL LOOPS

Principle of Operation 9-1
Current Loop 9-1
- Manual Tuning 9-2

Speed Loop 9-4
Field Control 9-4
- Set-up Notes 9-4
- Current Control 9-5
- Voltage Control 9-5
- Field Weakening 9-5
- Standby Field 9-5

Chapter 10 PARAMETER SPECIFICATION TABLE

Specification Table: Tag Number Order 10-2

Chapter 11 TECHNICAL SPECIFICATIONS

Environmental Details 11-1
EMC Compliance 11-1
External AC Supply (RFI) Filters and Line Choke 11-2
Cabling Requirements for EMC Compliance 11-2
Internal Fuses 11-3
External Fuses (European) 11-3
Earthing/Safety Details 11-3
Electrical Ratings - Power Circuit 11-4
3-Phase Power Supply Details 11-4
Electrical Ratings - Output 11-5
Auxiliary Power Supply Details 11-5
Terminal Definitions (Digital/Analog Inputs & Outputs) 11-6
Printed Circuit Board Types 11-7
Power Terminals 11-7
Terminal Information (Power Board) 11-8
Terminal Information (Control Board) 11-10

Contents

Contents *Page*

Terminal Information (Option Boards) 11-14
Termination Tightening Torque 11-15
Mechanical Details 11-15
Cooling 11-16

Chapter 12 CERTIFICATION FOR THE CONVERTER

Requirements for EMC Compliance 12-1
Minimising Radiated Emissions 12-1
Earthing Requirements 12-1
Protective Earth (PE) Connections 12-1
EMC Earth Connections 12-2
Cabling Requirements 12-2
Planning Cable Runs 12-2
Increasing Motor Cable Length 12-2
EMC Installation Options 12-3
Screening & Earthing (cubicle mounted, Class B) 12-3
Star Point Earthing 12-4
Sensitive Equipment 12-5
Requirements for UL Compliance 12-6
Motor Overload Protection 12-6
Branch Circuit/Short Circuit Protection Requirements 12-6
Short Circuit Ratings 12-6
Field Wiring Temperature Rating 12-7
Operating Ambient Temperature 12-7
Field Wiring Terminal Markings 12-7
Terminal Tightening Torque 12-7
Field Grounding Terminals 12-7
Field Terminal Kits 12-7
Fuse Replacement Information 12-7
European Directives and the CE Mark 12-8
CE Marking for Low Voltage Directive 12-8
CE Marking for EMC - Who is Responsible? 12-8
Legal Requirements for CE Marking 12-9
Applying for CE Marking for EMC 12-9
Which Standards Apply? 12-10
Basic and Generic Standards 12-10
Certificates 12-12

Contents

Contents *Page*

Chapter 13 Standard and Optional Equipment

Standard Equipment 13-1
Power Board Circuit Descriptions 13-1
590/591 (AH385851U002, U003, U004, U005) 13-1
590/591 (AH385621U001) 13-5
598/599 Power Board (AH385128U009) 13-10
Heatsink Cooling Fan Connections 13-10
Contactor Supply 13-10
Optional Equipment 13-11
Speed Feedback Option Boards 13-11
Microtach Option Board 13-12
Wire-Ended Encoder Option Board 13-12
Tacho Calibration Option Board 13-12
Combined Tacho and Encoder Feedback 13-13
Communications Option Boards 13-13
Comms Option Board (P1) 13-13
Remote 5721 Operator Station 13-13

Chapter 14 Serial Communications

Main Serial Port (P1) 14-1
Aux Serial Port (P2) 14-1
5721 Operator Station 14-1
System Port (P3) 14-2
ConfigEd Lite 14-2
UDP Support 14-2
UDP Menu Structure 14-3
UDP Transfer Procedure 14-3
MMI Dump 14-4
5703 Support 14-8
Commissioning the 5703/1 14-9
Error Codes 14-10
ERROR REPORT (EE) 14-10

Chapter 15 The Default Application

Block Diagrams 15-1
Programming Block Diagram - Sheet 1 15-3
Programming Block Diagram - Sheet 2 15-4
Main Block Diagram 15-5
Field Control Block Diagram 15-6
Start/Healthy Logic Block Diagram 15-7
Functional Block Diagram 15-8

GETTING STARTED

Introduction

System Design

The 590 Series Converter is designed for use in a suitable enclosure, with associated control equipment. The unit accepts standard three-phase ac supply voltages in the range 110V to 660V, depending upon the model, and is suitable for the powering of DC shunt field and permanent magnet motors, providing controlled dc output voltage and current for armature and field.

All units are designed for simple and economical panel mounting using keyhole slots. Plug-in control connectors simplify the fitting and removal of the unit to the panel.

Where possible, standard parts are used throughout the range thereby reducing the variety of spare parts required to maintain a multi-drive system. For example, the same basic control boards are used in all types of three-phase armature controller regardless of horsepower or bridge configuration.

The control circuit is totally isolated from the power circuit thus simplifying the interconnection of controllers within a system and improving operator safety. The coding circuitry adjusts automatically to accept supply frequencies between 45-65Hz and possesses high immunity to supply-borne interference. The armature controllers are phase rotation insensitive.

Control and Communications

The Converter is controlled by a 16 bit Microcontroller providing advanced features such as:

- **Complex control algorithms** which are not achievable by simple analog techniques.
- **Software-configurable control circuitry** built around standard software blocks.
- **Serial link communications** with other drives or a PC for advanced process systems.

The integral Man-Machine Interface (MMI), with a two-line 16 character display, is a powerful diagnostic tool. It provides access to all alarms, inputs and principal software blocks in the controller, whilst the front panel LED indicators give an immediate status display of the drive, key inputs and outputs.

Regenerative and Non-Regenerative Models

The motor armature controllers include both regenerative and non-regenerative models:

- **Regenerative controllers** consist of two fully-controlled thyristor bridges and a field bridge with full transient and overload protection, together with sophisticated electronic control of acceleration and deceleration, speed and torque in both directions of rotation.
- **Non-regenerative controllers** consist of one fully-controlled thyristor bridge and a field bridge with full transient and overload protection, together with its associated electronic control circuitry, and provide accurate speed and/or torque control in one selected direction of rotation.

Field Regulator

A field regulator is fitted as standard. The regulator consists of a full-wave half controlled single phase thyristor bridge with transient and overload protection. It provides either a fixed voltage or fixed current source, depending upon the selected mode of operation for constant torque applications. The field current mode of operation can be further enhanced to provide field weakening for drive control motors which require extended speed or constant horsepower control.

Equipment Inspection and Storage

- Check for signs of transit damage
- Check the product code on the rating label conforms to your requirement.

If the unit is not being installed immediately, store the unit in a well-ventilated place away from high temperatures, humidity, dust, or metal particles.

Refer to Chapter 2: "An Overview of the Converter" to check the rating label/product code.
Refer to Chapter 8: "Routine Maintenance and Repair" for information on returning damaged goods.
Refer to Chapter 11: "Technical Specifications" - Environmental Details for the storage temperature.

Packaging and Lifting Details

Caution
The packaging is combustible and, if disposed of in this manner incorrectly, may lead to the generation of lethal toxic fumes.

Save the packaging in case of return. Improper packaging can result in transit damage.

Use a safe and suitable lifting procedure when moving the drive. Never lift the drive by its terminal connections. The larger drives are fitted with lifting points.

Prepare a clear, flat surface to receive the drive before attempting to move it. Do not damage any terminal connections when putting the drive down.

Refer to Chapter 11: "Technical Specifications" - Mechanical Details for unit weights.

About this Manual

This manual is intended for use by the installer, user and programmer of the 590 Converter. It assumes a reasonable level of understanding in these three disciplines.

Note: *Please read all Safety Information before proceeding with the installation and operation of this unit.*

Enter the "Model No" from the rating label into the table at the front of this manual. There is also a column for you to record your application's parameter settings in the table in Chapter 10. It is important that you pass this manual on to any new user of this unit.

This manual is for the following models from the 590 Converter Series:

- Three phase, regenerative, four quadrant armature controllers:
  590 - for currents up to 720A
  598 - external stack option for currents exceeding 720A
- Three phase non-regenerative, two quadrant armature controllers:
  591 - for currents up to 720A
  599 - external stack option for currents exceeding 720A
- 590H and 591H (further detail is provided in the separate Addendum manual)

Initial Steps

Use the manual to help you plan the following:

Installation
Know your requirements:

- certification requirements, CE/UL/c-UL conformance
- conformance with local installation requirements
- supply and cabling requirements

Programming (MMI or suitable PC programming tool only)

Know your application:

- plan your “block diagram programming”
- enter a password to guard against illicit or accidental changes
- learn how to back-up your application data

How the Manual is Organised

The manual is divided into chapters and paragraphs. Page numbering restarts with every chapter, i.e. 5-3 is Chapter 5, page 3.

Application Block Diagram

You will find this at the rear of the manual. The pages unfold to show a complete block diagram, this will become your programming tool as you become more familiar with the software.

AN OVERVIEW OF THE CONVERTER

How it Works

Note: *Refer to Chapter 9: "Control Loops" for a more detailed explanation.*

In ***very*** simple terms, the Converter controls the dc motor with the use of *Control Loops* - an inner Current Loop and an outer Speed Loop. These control loops can be seen in the Application Block Diagram. The block diagram shows all the Converter's software connections.

Using the Man-Machine Interface (MMI), you can select the control loops to be used by the Converter to provide either:

- Current Control
- Speed Control (default)

It is usual to supply a Current or Speed Feedback signal to the appropriate loop for more effective control of the Converter. Current Feedback sensors are built-in, whereas Speed Feedback is provided directly from the armature sensing circuit (default), or by tachogenerator, encoder or Microtach connection to the relevant option board.

When in Speed Control, you can modify the performance of the Converter further by controlling the motor field, i.e. Field Control. By weakening the field current, you can obtain an increase in motor speed beyond that normally achievable for the rated Armature Voltage of the dc motor.

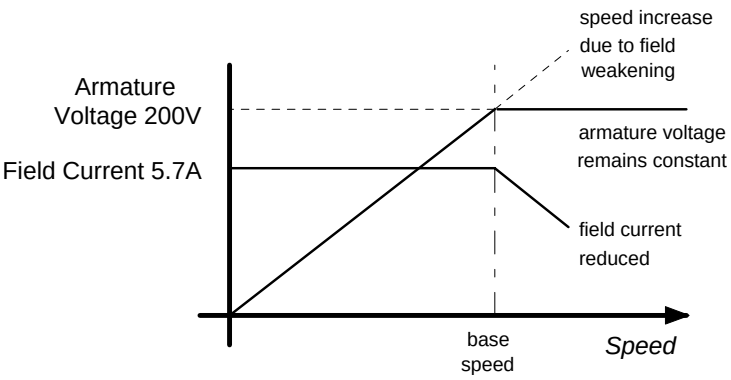

The Converter is controlled remotely using digital/analog inputs and outputs. It cannot be directly *stopped* or *started* using the MMI.

A remote 5721 Operator Station can also be connected. This allows you to read and write to many of the drive's parameters from outside the cubicle if required.

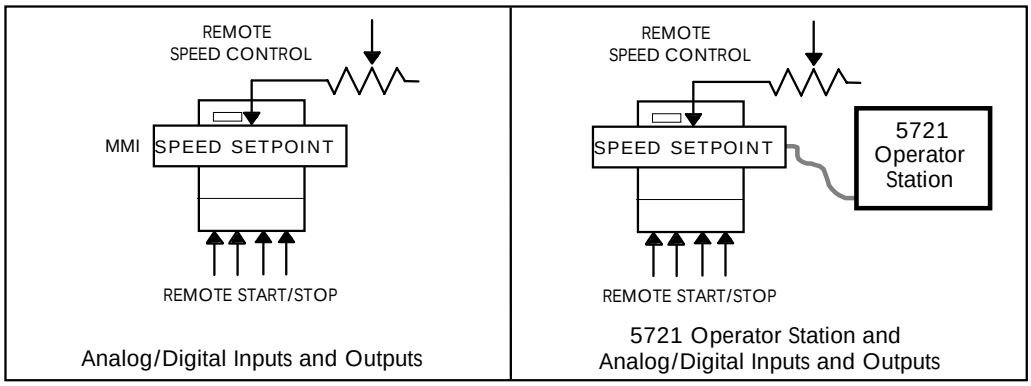

By plugging in a COMMS Option Board, the Converter can be linked into a network and controlled by a PLC/SCADA or other intelligent device.

Component Identification

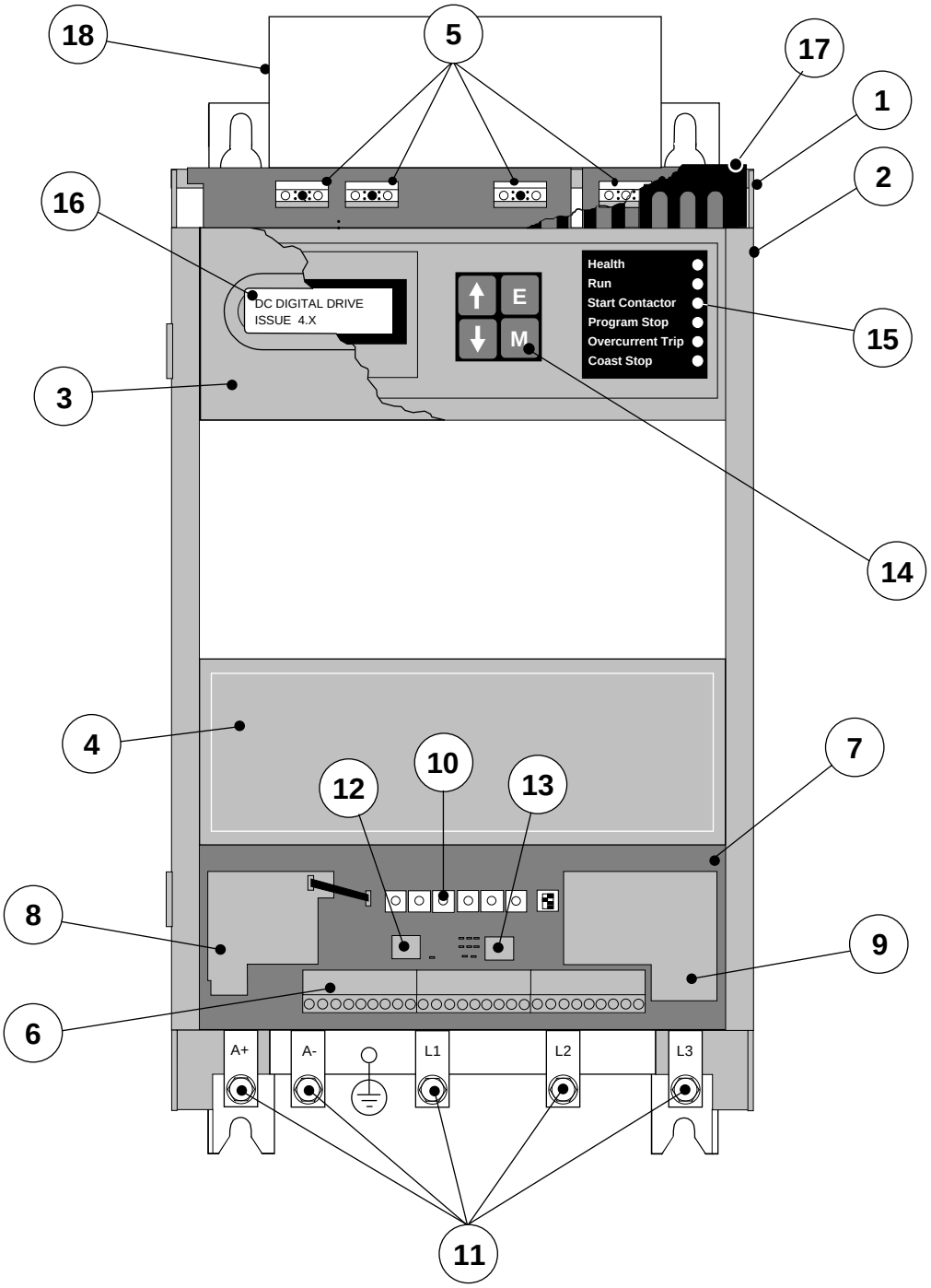

Figure 2-1 View of Component Parts (110A model illustrated)

1	Main converter assembly	**10**	Calibration panel
2	Converter door assembly	**11**	Busbars - main power input
3	Hinged MMI cover	**12**	System Port (P3)
4	Hinged terminal cover	**13**	Auxiliary Serial Port (P2)
5	Field wiring terminals	**14**	Man-Machine Interface (MMI) keypad
6	Control terminals	**15**	Status LEDs
7	Control board	**16**	MMI display
8	Tacho/Encoder/Microtach option board	**17**	IP20 Top Cover
9	Main Serial Port COMMS option module (P1)	**18**	IP20 Fan Housing (where fitted)

Control Features

Control	Control Circuits	Fully isolated from power circuit (SELV)
	Output Control	• Fully controlled 3-phase thyristor bridge • Microprocessor implemented phase control extended firing range • For use on 50 or 60Hz supplies with a frequency compliance range of 45 to 65Hz • Phase control circuits are phase rotation insensitive
	Control Action	• Fully digital • Advanced PI with fully adaptive current loops for optimum dynamic performance • Self Tuning Current Loop utilising "Autotune" algorithm • Adjustable speed PI with integral defeat
	Speed Control	• By Armature Voltage feedback with IR compensation • By Encoder feedback or analog tachogenerator
	Speed Range	100 to 1 typical with tachogenerator feedback
	Steady State Accuracy	• 0.01 % Encoder Feedback with Digital setpoint (serial link or P3) • 0.1 % Analog Tach Feedback • 2 % Voltage Feedback • Absolute (0.0% error) using QUADRALOC Mk II digital controller ***Note:*** *Long term analog accuracy is subject to tachogenerator temperature stability.*
	Adjustments	All adjustments in software can be altered by on-board pushbuttons or via serial communications. An LCD display provides monitoring of adjustment parameters and levels, in addition to diagnostic facilities.
Protection		• High energy MOVs • Overcurrent (instantaneous) • Overcurrent (inverse time) • Field failure • Speed feedback failure • Motor overtemperature • Thyristor Stack overtemperature (Force ventilated units) • Thyristor "Trigger" failure • Thyristor Snubber Network • Zero-speed detection • Standstill logic • Stall protection
Diagnostics		• Fully computerised with first fault latch and automatic display • Digital LCD monitoring • Full diagnostic information available on RS422/RS485 • LED circuit state indication

Table 2-1 Control Features

Understanding the Product Code

The unit is fully identified using an alphanumeric code which records how the Converter was calibrated, and its various settings when despatched from the factory.

The Product Code appears as the “Model No.”. Each block of the Product Code is identified as below:

Block No.	Variable	Description
1	XXXX	Generic product 590C : 3 phase 4 quadrant (regenerative) converter up to 720A 591C : 3 phase 2 quadrant (non-regenerative) converter up to 720A
2	XXXX	Four identifying the maximum dc output current rating that may be calibrated for each size of product: 0350 = 35A 0700 = 70A 1100 = 110A 1500 = 150A 1800 = 180A 2700 = 270A 3600 = 360A 4500 = 450A 7200 = 720A
3	X	1 digit identifying the nominal 3 phase ac power, supply voltage; 0 = 110V 1 = 115V 2 = 208V 3 = 220V 4 = 240V 5 = 380V 6 = 415V 7 = 440V 8 = 460V 9 = 480V A = 500V
4	X	1 digit identifying the auxiliary ac control supply voltage: 0 = 110V 1 = 115V 3 = 220V 4 = 240V
5	X	One digit specifying the user interface language. 0 = English 1 = (reserved) 2 = French 3 = German (refer to Customer Services) 4 = Italian (refer to Customer Services) 5 = Spanish (refer to Customer Services)
6	X	One character specifying any feedback option installed over and above the standard features of the product: 0 = Armature Voltage 1 = DC Tacho 2 = 5701 Plastic Fibre Microtach 3 = Wire-ended Encoder 4 = 5901 Glass Fibre Microtach
7	X	One character specifying the communications protocol and its hardware implementation method: 0 = No serial link 1 = Fitted RS485 serial link 2 = PROFIBUS (Version 1) - compatible with existing products 3 = PROFIBUS (Version 2) - preferred version

Block No.	Variable	Description
8	XX	Two characters specifying special options (hardware): 00 = No special options 01 to 99 = Documented special options
9	XXX	Three characters specifying special options (software): 000 = No special options 001 to 999 = Documented special options

INSTALLING THE CONVERTER

IMPORTANT: Read Chapter 12: "Certification for the Converter" before installing this unit.

Refer to Installation Drawings, page 3-20 for further information.

Mechanical Installation

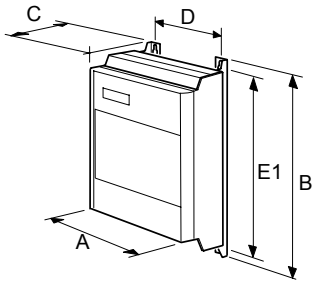

35A - 70A

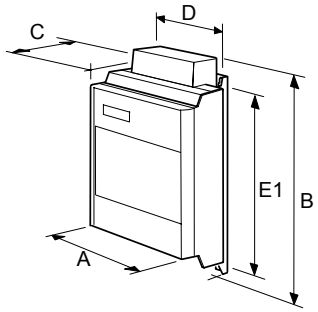

110A - 150A

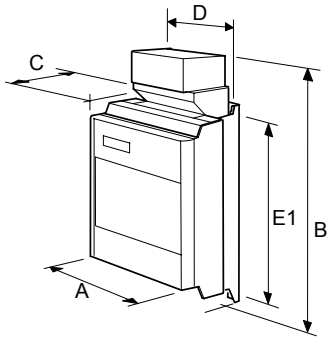

180A - 270A

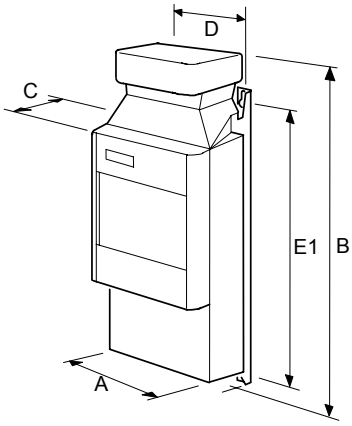

360A

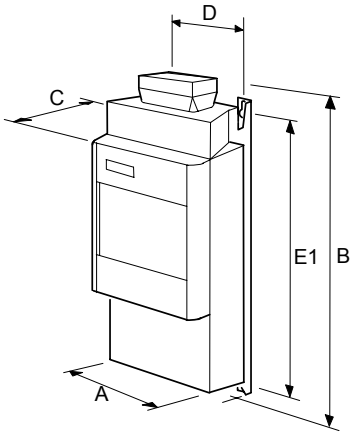

450A *

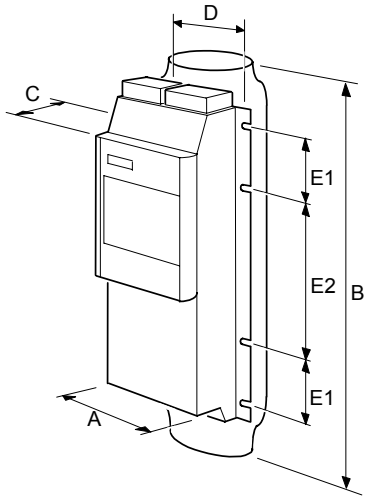

720A - 800A *

** Cooling fan assemblies not shown*

Current Rating (A)	Model	Overall Dimensions			Fixing Centres		
		A	B	C	D	E1	E2
35 - 70	590D/591D	250	415	180	200	400	-
110 - 150	590D/591D	250	445	180	200	400	-
180	590D/591D	250	555	180	200	400	-
270	590D/591D	300	500	210	200	400	-
360 & 450	590D/591D	322	705	252	200	600	-
720 & 800	590D/591D	370	930	330	300	133	400
Dimensions are in millimetres							

Mounting the Converter

General installation details are given below for mounting the Converter, however, if you are installing the unit with an EMC filter refer to “External AC Supply EMC Filter Installation”, page 3-17.

Mount the unit vertically on a solid, flat, vertical surface. It is mounted using bolts or screws into four fixing points (keyhole slots). The design allows the use of 100mm grid fixing.

It must be mounted inside a suitable cubicle. To comply with the European safety standards VDE 0160 (1994)/EN50178 (1998), the cubicle must require a tool for opening.

Ventilation and Cooling Requirements

Refer to Chapter 11: “Technical Specifications” - Cooling.

The Converter gives off heat in normal operation and must therefore be mounted to allow the free flow of air through the air entries and exits. Maintain the minimum air clearances given on the drawings to ensure that heat generated by other adjacent equipment is not transmitted to the Converter, be aware that other equipment may have its own clearance requirements. When mounting two or more 590’s together, these clearances are cumulative.

Ensure that the mounting surface is normally cool.

Refer to Chapter 13: “Standard and Optional Equipment” - Heatsink Cooling Fan Connections for fan connection details.

AC Line Choke

We recommend that you always use the specified ac line choke with the Converter to provide a known supply impedance for effective operation of the thyristor transient suppression circuits.

Refer to Chapter 11: “Technical Specifications” - External AC Supply (RFI) Filters and Line Choke for selection details.

Electrical Installation

IMPORTANT: Please read the Safety Information on page Cont. 3 & 4 before proceeding.

WARNING!
Ensure that all wiring is electrically isolated and cannot be made "live" unintentionally by other personnel.

Note: *Refer to Chapter 11: "Technical Specifications" for additional Cabling Requirements and Terminal Block Wire Sizes.*

Cables are considered to be electrically *sensitive*, *clean* or *noisy*. You should already have planned your cable routes with respect to segregating these cables for EMC compliance. If not, refer to Chapter 12: "Certification for the Converter".

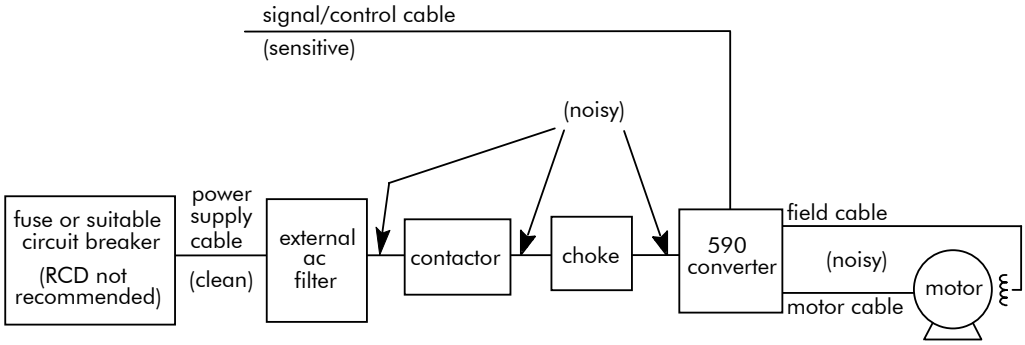

Figure 3-1 Cabling Requirements

If the controller is to be operating in a regenerating mode for extended periods acting as a load generator for another machine, it is advisable to fit additional protection in the armature circuit. A dc fuse or high speed circuit breaker will provide this protection. If in doubt, contact Parker SSD Drives.

Cable Gland Requirements

Use a metal gland to connect to the cubicle backplate, near the VSD (variable speed drive). It must be capable of securing a 360 degree screened connection to give EMC compliance. A 360 degree screened connection can be achieved as shown.

We suggest a rubber grommet should be fitted on holes where a cable gland is not used.

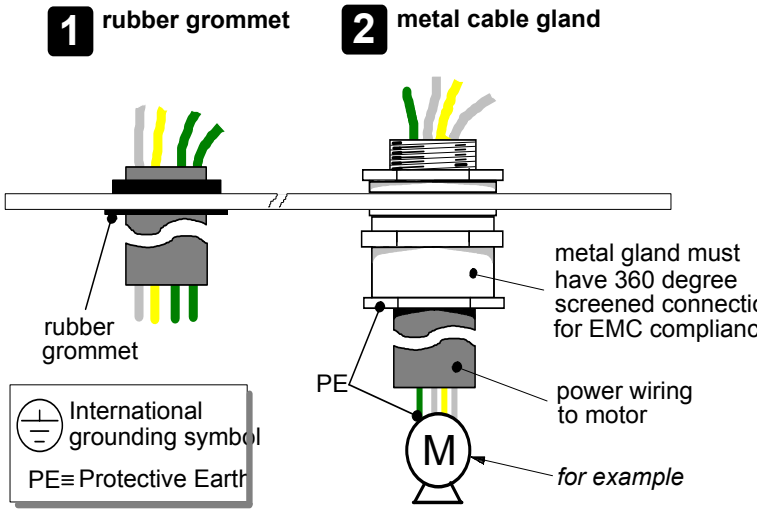

Figure 3-2 Cable and Screen Fixings

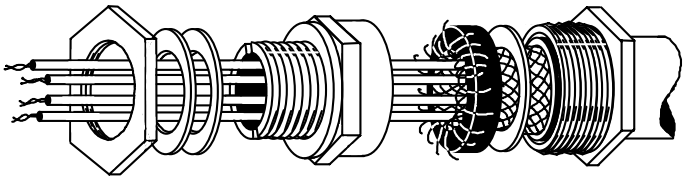

Figure 3-3 360 Degree Screened Connection

Minimum Connection Requirements

Note: *Because of the complexity of showing all possible configurations, this Chapter deals only with a `general purpose' operation as a basic speed controller. Special wiring options usually form part of a customer-specific system and connection details will be provided separately.*

The circuit diagram over the page uses bold lines to show the minimum connection requirements for operating the Converter. These connection details are highlighted 1 to 9 in the following text with the symbol opposite. The remaining connection details are not necessary for a "quick start-up".

MINIMUM CONNECTION REQUIREMENT

The Converter is using the default Armature Voltage feedback when following the `minimum connection' instructions.

IMPORTANT: Indicator lamps, annunciators, etc., for "Drive On" condition should be switched by an auxiliary contactor of the main contactor, not by the controller auxiliary relay.

To avoid damaging the drive NEVER carry out high voltage resistance or dielectric strength tests without first completely disconnecting the drive from the circuit being tested.

- Power cables must have a minimum rating of 1.1 x full load current. (1.25 x FLC when required to comply with UL requirements).
- All incoming main AC power supply connections must be protected with high speed semiconductor fuses. Refer to Chapter 11: "Technical Specifications" for fuse information.
- The External AC Supply EMC Filter must only be fitted on the mains side of the contactor.

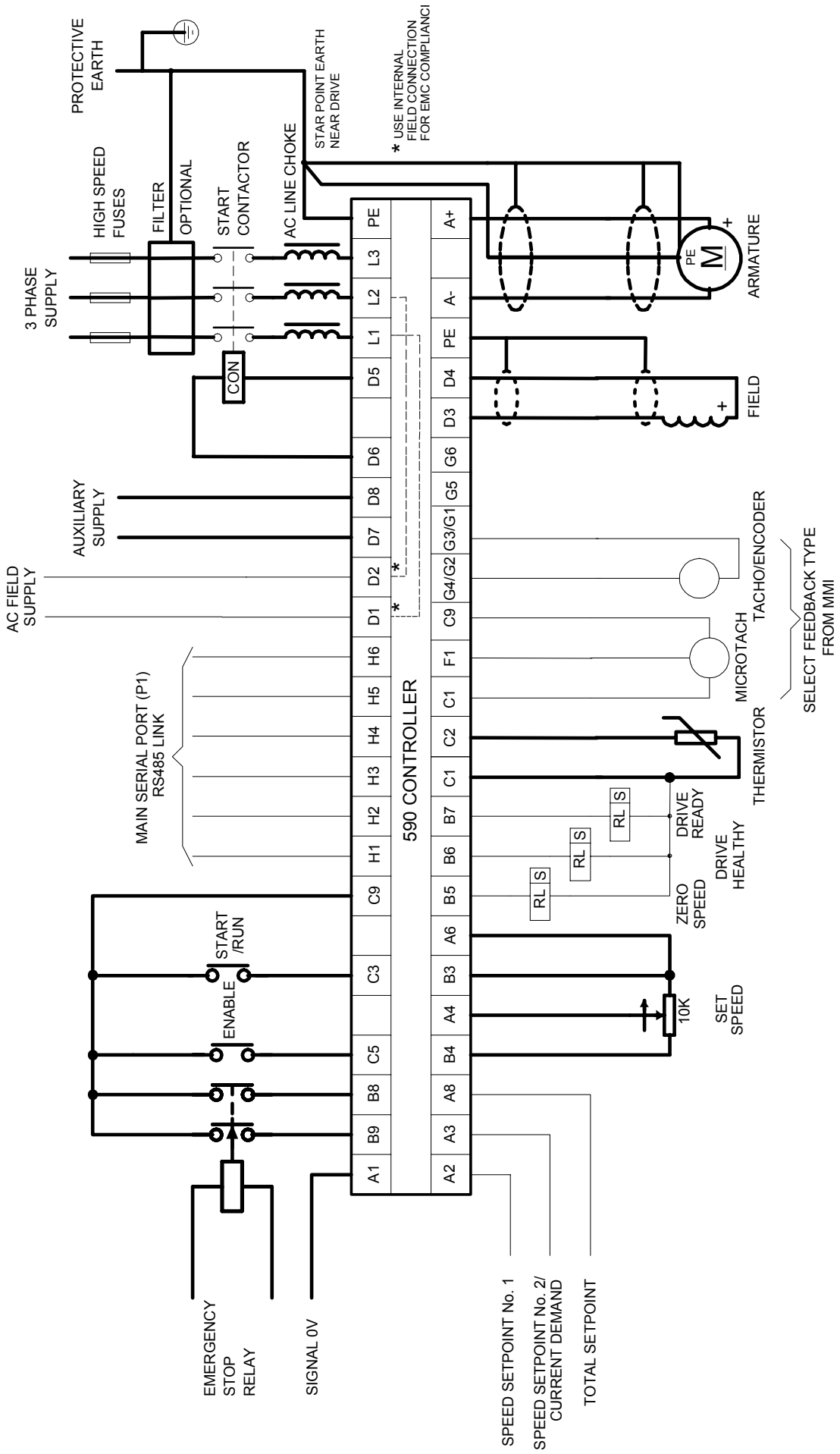

Figure 3-4 Minimum Connection Requirements (`general purpose' configuration)

Protective Earth Connections (PE)

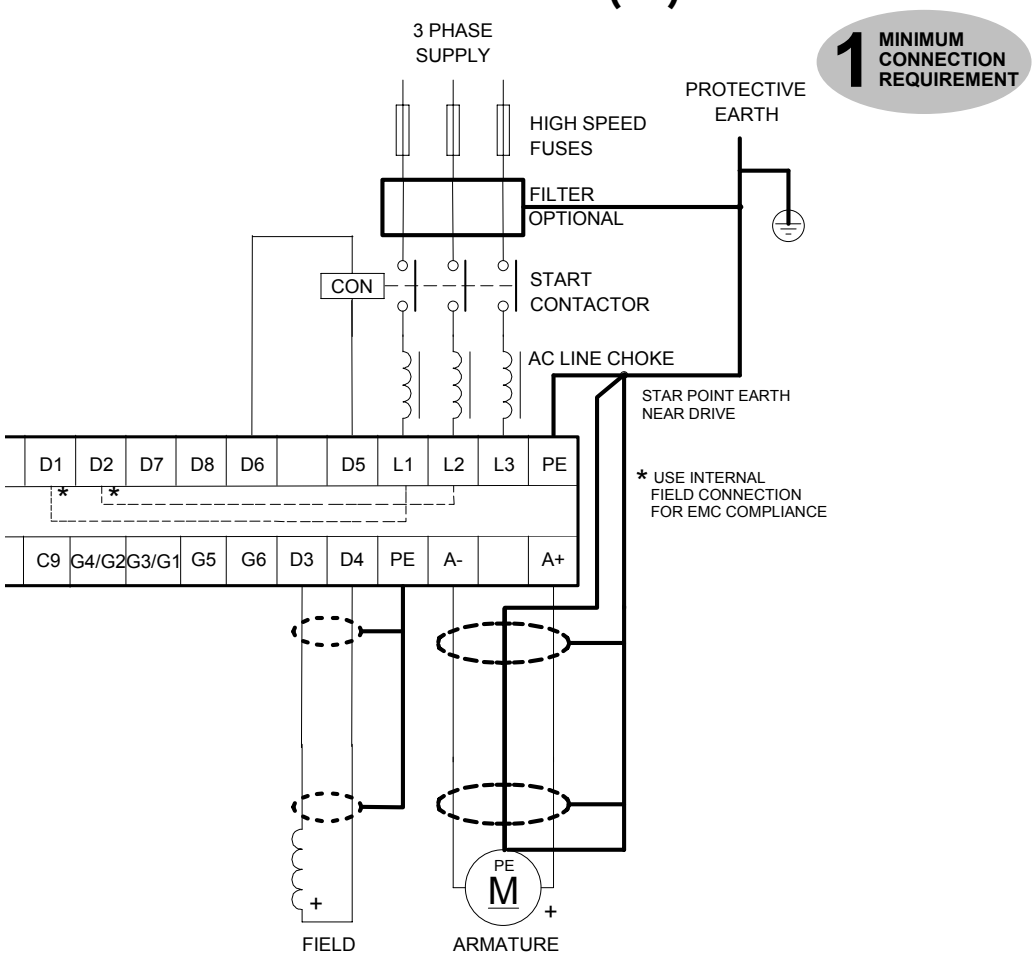

IMPORTANT: The VSD and filter (if fitted) must be **permanently earthed**. Each conductor used for permanent earthing must *individually* meet the requirements for a protective earth conductor.

For installations to EN 60204 in Europe:

- For permanent earthing, the converter requires either two individual incoming protective earth conductors (<10mm² cross-section), or one conductor (≥10mm² cross-section) connected to an independent protective earth/ground point near the drive.
- Run the motor protective earth/ground connection in parallel with the motor supply conductors, ideally in the same conduit/screen/armour, and connect to an independent protective earth/ground point near the drive.
- Connect the drive to the independent earth/ground point.

Refer to Chapter 12: "Certification for the Converter" - Screening & Earthing (cubicle mounted, Class B).

NOTE: *The 720/800A chassis requires* ***two*** *individual incoming protective earth conductors to the filter using the two M8 terminals provided. BOTH MUST BE CONNECTED TO PROTECTIVE EARTH.*

Protect the incoming mains supply, detailed in Chapter 11: "Technical Specifications" - Power Details, using a suitable fuse or circuit breaker (a circuit breaker, e.g. RCD, ELCB, GFCI, is not recommended, refer to "Earth Fault Monitoring Systems", page 3-19.)

Power Wiring Connections

WARNING!
Power terminals carry electrical voltage which can be lethal. Never work on any control equipment or motors without first removing all power supplies from the equipment.

3-Phase Contactor (D5, D6)

2 MINIMUM CONNECTION REQUIREMENT

A 3-phase contactor should be connected in the main ac power supply connections with a rating suitable (AC1) for the controller concerned.

The contactor does not switch current and is primarily for disconnection and sequencing of the power bridge. The main contactor must be energised directly from the controller by connecting the coil to terminals D5 (Line) and D6 (Neutral). No additional series contacts or switches are permitted since they will interfere with the sequencing of the controller and cause unreliability and possible failure.

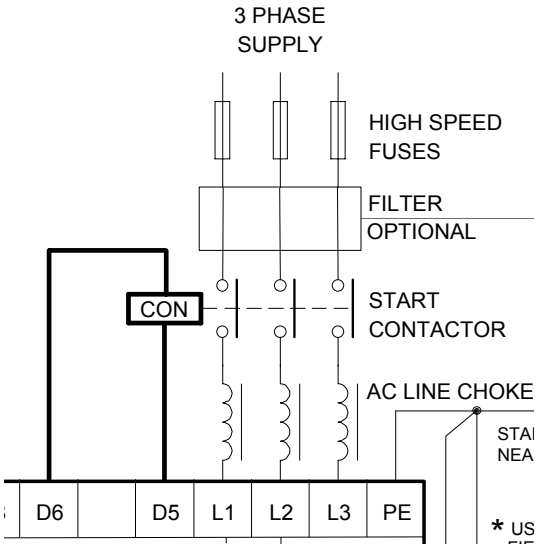

Note: *If the 3-phase contactor has a coil with an inrush greater than 3A, a slave relay must be used to drive the contactor coil. The contactor and slave relay (if required) must have coil voltages compatible with the controller auxiliary supply voltage.*

A dc contactor can be used but the sequencing must be adjusted to accommodate its use, an auxiliary normally open volt-free contact of the contactor must be connected in series with the "enable" input C5 to disable the drive until after the contactor is closed.

3-Phase Supply, AC Line Choke (L1, L2, L3)

3 MINIMUM CONNECTION REQUIREMENT

The main ac power is connected to busbar terminals L1, L2 and L3, there is no specific phase connection to these three terminals as the controller is phase rotation independent. The connections must be made via the correct high speed semiconductor fuses, the main contactor and the ac line choke.

IMPORTANT: If a motor becomes completely short-circuited, the current trip (OVER I TRIP) **will not** protect the Converter. Always provide high-speed thyristor fusing to protect the thyristor stack in the case of direct output short circuits.

Fit a 3-phase ac line choke in series with the incoming main 3-phase ac power supply. (Parker SSD Drives stock a series of chokes suitable for this duty, mechanically designed to connect directly to the controller ac supply terminals.) The choke should be connected between the controller and the ac contactor for optimum protection and safety (refer to drawing HG386828C).

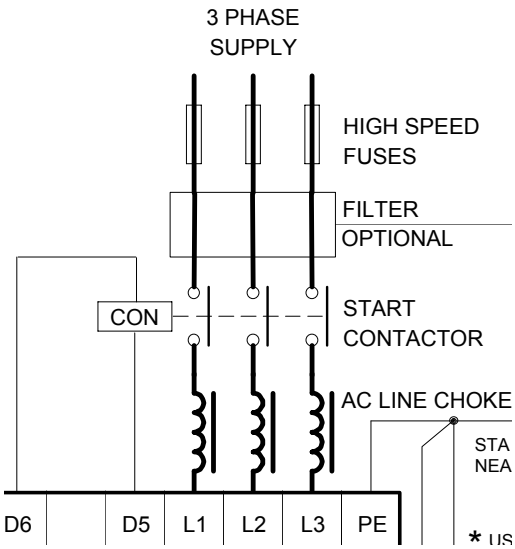

The choice of ac or dc contactors is a user preference. Parker SSD Drives prefers ac contactors as they isolate the converter and motor when not in use. The only restriction on the use of a dc contactor is that an interlocking contact should be provided into the Enable input.

Auxiliary Supply (D7, D8)

4 MINIMUM CONNECTION REQUIREMENT

Connect the auxiliary or control supply (single phase 50/60Hz) to terminals D7 (Neutral) and D8 (Line) with suitable external fuse protection. The steady state current absorbed by the controller is nominal, the external fuse is determined chiefly by considering the contactor holding VA and the controller cooling fans.

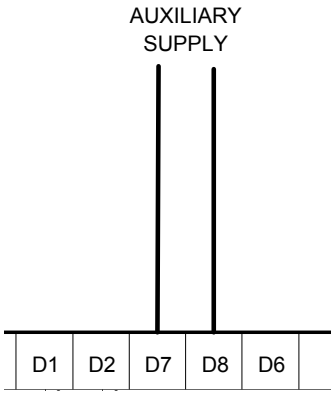

Field (D3, D4)

5 MINIMUM CONNECTION REQUIREMENT

Connect the motor field (-) to terminal D3 and field (+) to terminal D4. If the motor has no field connections, is a permanent magnet motor, or if the field is derived externally, you must inhibit the FIELD ENABLE parameter.

MMI Menu Map

1 SETUP PARAMETERS

2 FIELD CONTROL

FIELD ENABLE

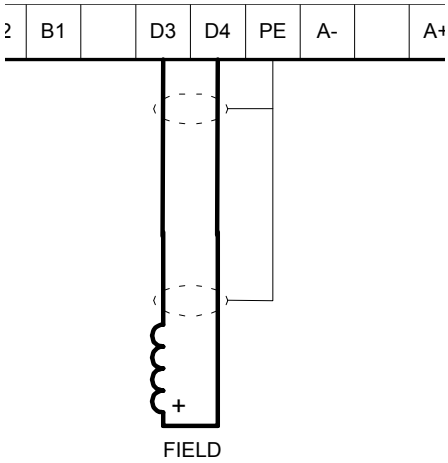

Motor Armature (A+, A-)

6 MINIMUM CONNECTION REQUIREMENT

The motor armature is connected to busbar terminals A+ and A-. If a DC contactor is used the poles should be interposed between the controller terminals and the motor terminals.

Note: *When the controller is operating in a regenerating mode for extended periods acting as a load generator for another machine, it is advisable to fit additional protection in the armature circuit. A DC fuse or a high speed circuit breaker will provide this protection, if in doubt consult the Parker SSD Drives Engineering Department.*

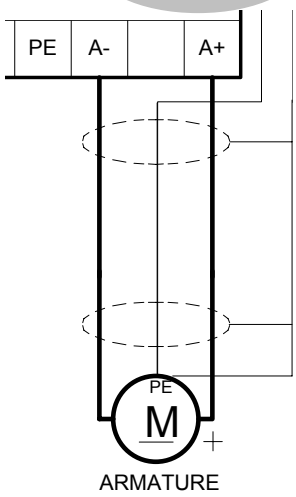

External AC Field (D1, D2)

If an external field supply is required to the controller for application reasons, connect this supply to terminals D1 and D2. The magnitude of this voltage is determined by the desired field voltage. The supply must be protected externally with suitable fuses. Always derive the supply from the Red and Yellow phases of the main power supply, with the Red phase connected to terminal D1 and the Yellow phase to terminal D2.

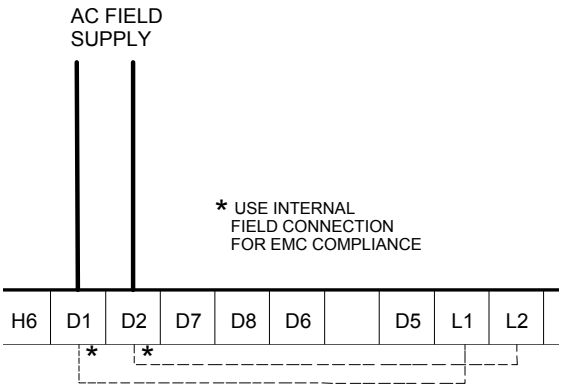

IMPORTANT: It is important that connection of the controller and the external field supply is consistent when using an externally supplied field regulator. The supply must be derived from L1 (Red) and L2 (Yellow) phases directly or indirectly through a transformer. L1 must be connected to D1, and L2 connected to D2.

To change the controller from an internal to an external field type refer to Motor Field Connections, page 3-14.

Control Wiring Connections

Note: *Refer to Chapter 11: "Technical Specifications" for Control Terminal information.*

- Use screened control cables to comply with EMC requirements.
- Control wiring must have a minimum cross-section area of 0.75mm^2 (square millimetre).
- Feed the control cables into the Converter and connect to the control terminals. Refer to the connection label on the inside of the hinged terminal cover. Close the terminal cover.

IMPORTANT: All connections made to terminal blocks A, B and C must be isolated signal voltages.

If in doubt about the connection of the DC motor to the controller check with Parker SSD Drives Engineering Department.

Setpoint Ramp Input (A4, A6, B3, B4)

7 MINIMUM CONNECTION REQUIREMENT

For normal operation the speed demand signal is connected to the "Setpoint Ramp Input", terminal A4 (Analog I/P3). This input is scaled so that:

+10V input = maximum forward speed demand (+100%)
- 10V input = maximum reverse speed demand (-100%)

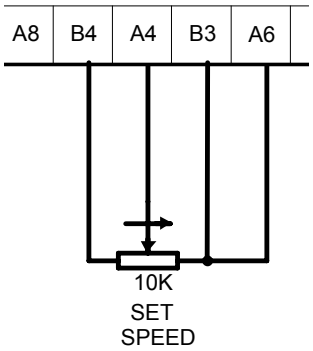

The speed demand signal can be generated by connecting the two ends of an external 10K potentiometer to the +10V reference terminal B3 and -10V reference terminal B4, the wiper of the potentiometer being connected to the "Setpoint Ramp Input" as the speed reference.

The main current limit is adjustable by means of the MAIN CURR. LIMIT parameter [Tag No. 15]. For normal operation of the main current limit, Terminal A6 should be connected to the +10V reference, Terminal B3, and the CURR. LIMIT/SCALER should be set to 200%. This allows the MAIN CURR. LIMIT parameter to adjust the current limit between 0 and 200% full load current. If external control of the main current limit is required, a 10K potentiometer connected between Terminal B3 (+10V Ref) and Terminal B1(0V), with the wiper connected to Terminal A6 (Analog I/P5) gives 0 to 200% of full load current provided that MAIN CURR. LIMIT and CUR. LIMIT/SCALER are set to 200%.

MMI Menu Map

1 SETUP PARAMETERS
2 CURRENT LOOP
- CURR. LIMIT/SCALER
- MAIN CURR. LIMIT

Signal 0V (A1)

This is the common reference point for all analog signals used in the drive.

For non-reversing applications and 2 quadrant controller (591 and 599), the speed demand only needs to operate between 0V and +10V, the anti-clockwise end of the potentiometer should then be connected to Terminal A1 (0V).

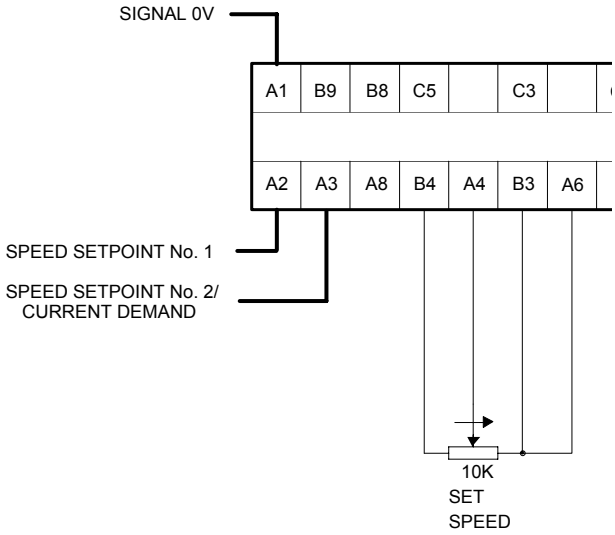

Speed Setpoint No. 1 (A2)

Terminal A2 (Analog Input 1) is a direct speed demand by-passing the "Setpoint Ramp Generator", and should be used if direct control is required.

Speed Setpoint No. 2 / Current Demand (A3)

Terminal A3 (Analog Input 2) is a dual function terminal (either "Speed Setpoint No. 2" or "Current Demand") as selected by mode switch control "Current Demand Isolate", Terminal C8. As a speed setpoint, it can be used in the same way as Terminal A2.

If more than one speed setpoint is used they are additive.

Thermistor (C1, C2)

The motor temperature alarm (THERMISTOR) cannot be inhibited in software. Terminals C1 and C2 must be linked if sensors are not fitted.

8 MINIMUM CONNECTION REQUIREMENT

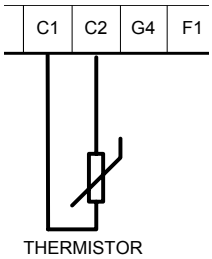

We recommend that you protect the dc motor against overtemperature by the use of temperature sensitive resistors or switches in the field and interpole windings of the machine.

If the motor is fitted with over-temperature sensing devices such as thermostats, microtherms or PTC thermistors, these should be connected (in series) between terminals C1 and C2. Thermistors must have a combined working resistance of 200 Ohms or less, rising to 2000 Ohms at over-temperature. These thermistors are classified by IEC34-II as Mark A.

- Temperature sensitive resistors have a low resistance (typically 100 Ohms) up to a reference temperature (typically 125°C), above this the resistance rises rapidly to greater than 2000 Ohms. The controller's thermistor alarm will activate at 1800 Ohms.

Temperature switches are usually normally closed, and open at approximately 105°C. The thermistor alarm is latched in software and must be reset by re-starting the Converter.

Enable, Start/Run, Emergency Stop Relay (B8, B9, C3, C5, C9)

Terminal C5 (Enable) must be connected to Terminal C9 (+24V) in order to allow the drive to run.

9 MINIMUM CONNECTION REQUIREMENT

Start

The basic run/start sequence of the controller is provided by Terminal C3 (Start/Run), although other safeguards for extra protection are provided by Terminal B8 (Program Stop) and Terminal B9 (Coast Stop).

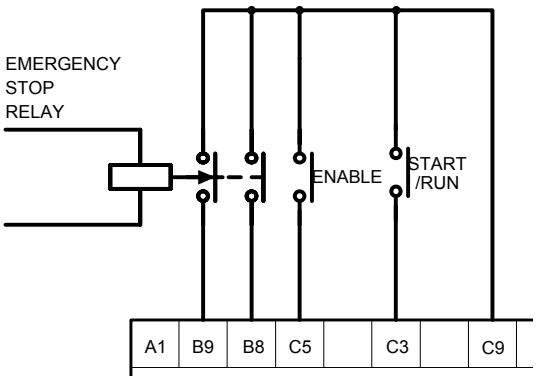

Assuming that the Program Stop and Coast Stop terminals are held TRUE, then a single contact connected between Terminal C9 (+24V) and Terminal C3 (Start/Run) when closed will cause the controller to energise the Main Contactor and, provided Terminal C5 (Enable) is also TRUE, will run the associated DC motor.

When the single contact to Terminal C3 (Start/Run) is opened, the controller will decelerate the motor to zero speed at a rate determined by the STOP TIME parameter's value and the MAIN CURR. LIMIT value. Refer to Chapter 6: "Application Programming" - STOP RATES for further information.

Note: *The Enable input is useful to inhibit the drive without opening the main contactor, however, it is not a safe mode of operation as the drive dc output is only reduced to zero. If the equipment controlled by the drive is to be serviced, then this method should be avoided and the drive disabled and isolated.*

A regenerative drive can be stopped using a *Normal Stop*, a *Program Stop,* or an *Emergency Stop,* as described below. However, a non-regenerative drive can only be made to stop faster than friction and loading will allow by Dynamic Braking.

Normal Stop

If the +24V is removed from Terminal C3 whilst the drive is controlling the motor under "Run" conditions, the controller will cause the motor to decelerate rapidly to rest at a rate determined by STOP LIMIT, STOP TIME and CURR. LIMIT.

Program Stop

If the +24V is removed from Terminal B8 whilst the drive is controlling the motor under "Run" conditions, the controller will cause the motor to decelerate rapidly to rest at a rate determined by PROG STOP I LIM, PROG STOP LIMIT and PROG STOP TIME. If the signal is re-applied to Terminal B8, the motor remains stationary until a new Start command is applied to Terminal C3 (Start/Run).

Emergency Stop

Additional terminals, Terminal B8 (Program Stop) and Terminal B9 (Coast Stop), provide extra facilities for the control of the regenerative controller:

- Terminal B9 (Coast Stop) must be held at +24V to allow closure of the main contactor, the connection provides the power supply to allow the electronics to operate the auxiliary relay and hence the main contactor.

  Connect Terminal B9 (Coast Stop) to Terminal C9 (+24V) via a normally open contact of an "emergency" stop relay. The emergency stop relay should not be part of the normal sequencing of the system, which is implemented via the Start contacts, but is a relay which can be operated in exceptional circumstances where human safety is of paramount importance.

- Terminal B8 (Program Stop) provides a facility for regenerative braking on a 4 Quadrant drive (590 and 598).

Zero Speed, Drive Healthy, Drive Ready (B5, B6, B7)

These digital output terminals provide a +24V dc output signal under certain conditions. This allows for the connection of relays which, in conjunction with the Enable, Start/Run and Emergency Stop relay, can be used to enhance the safe starting and stopping of the controller.

These are configurable outputs and can be used as required in the control system design, i.e. cubicle door lamps, connection to a suitable PLC.

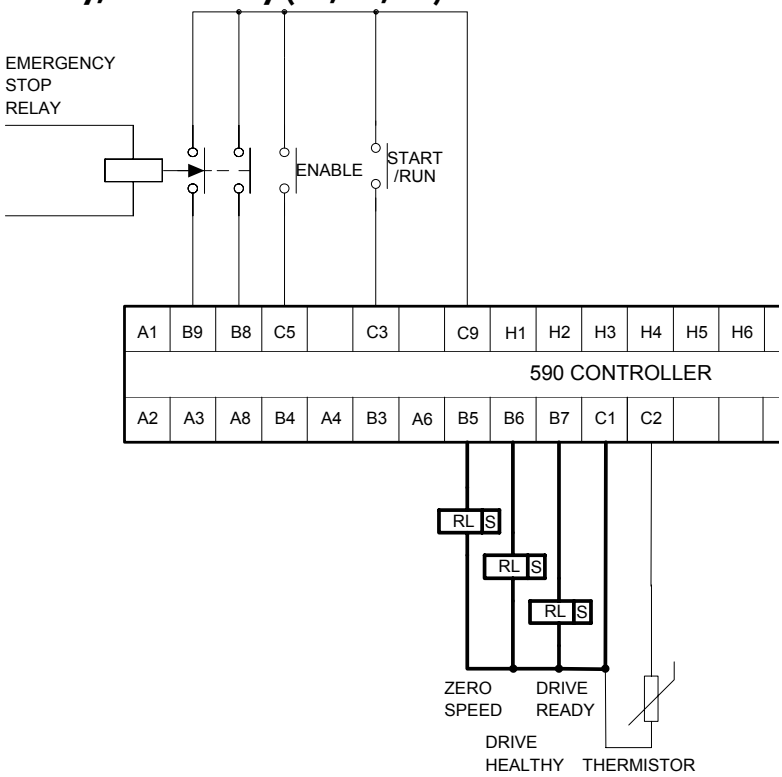

(The diagram shows a simple default configuration).

RS485 Link (H1, H2, H3, H4, H5, H6)

These terminals are found on the plug-in COMMS Option Board. The board, when fitted to each unit, allows converters to be linked together to form a network.

Refer to the RS485 Communications Interface Technical Manual supplied with the option board.

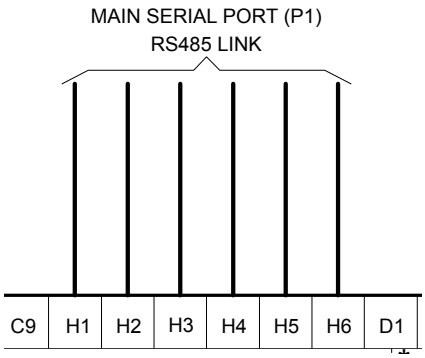

Analog Tachogenerator (G1, G2, G3, G4)

Refer to Chapter 13: "Standard and Optional Equipment" - Optional Equipment for further information.

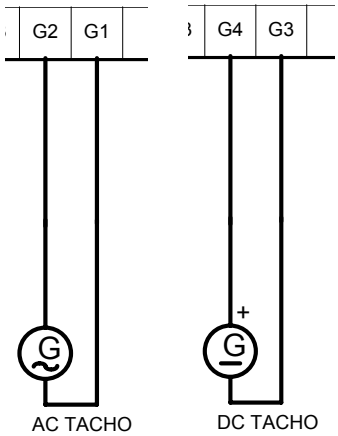

An Analog Tachogenerator is connected to the Converter using a screened twisted pair cable throughout its entire length to provide speed feedback via the Tacho Calibration Option Board. This provides facility for an AC or DC tachogenerator. The screen is grounded or earthed only at the drive end, any other grounding arrangement may cause problems.

Terminals G1 and G2 are for AC tacho connections.

Terminals G3 and G4 are for DC tacho connections.

Note: *The speed loop is set-up for an analog tacho by the SPEED FBK SELECT parameter in the SPEED LOOP function block. Select ANALOG TACH for this parameter.*

If an AC tachogenerator is used the output is rectified to produce the ac feedback to the speed loop. Consequently, the controller can only be used with a positive setpoint.

Refer to Chapter 4: "Operating the Converter" for set-up information.

Microtach (F1, C1, C9)

Refer to Chapter 13: "Standard and Optional Equipment" - Optional Equipment for further information.

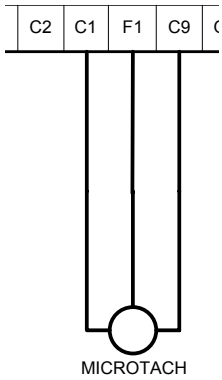

The Parker SSD Drives MICROTACH is available in two versions:

- 5701 Plastic Fibre Microtach
- 5901 Glass Fibre Microtach

A Microtach can be connected to provide speed feedback via the Microtach Option Board. using the international standard "ST" fibre optic system.

F1 is the fibre optic receiver input socket. Terminals C9 (+24V dc) and C1 (0V) are used to provide the supply and return respectively.

Note: *The speed loop is set-up for the Microtach by the SPEED FBK SELECT parameter in the SPEED LOOP function block. Select ENCODER for this parameter.*

Maximum Microtach frequency 50kHz, i.e. with a 1000 lines per revolution Microtach, the motor speed cannot exceed 3000 rpm.

For specification and connection information refer to Parker SSD Drives or the appropriate Technical Manual.

Wire-Ended Encoder (G1, G2, G3, G4, G5, G6)

Refer to Chapter 13: "Standard and Optional Equipment" - Optional Equipment for further information.

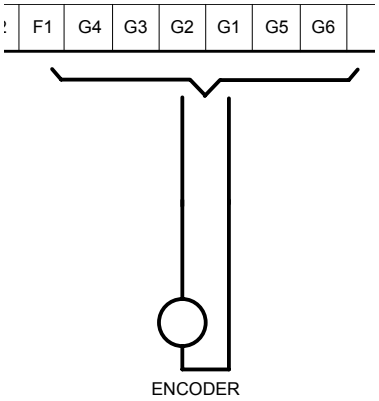

- The wire-ended encoder is connected to the Converter using a screened cable throughout its entire length to provide speed feedback.

  Terminals G1 (0V) and G2 (+24V dc) are the return and supply respectively.

Note: *The speed loop is set-up for the Encoder by the SPEED FBK SELECT parameter in the SPEED LOOP function block. Select ENCODER for this parameter.*

Maximum Encoder frequency 100kHz, i.e. with a 1000 lines per revolution encoder, the motor speed cannot exceed 6000 rpm.

For specification and connection information refer to Parker SSD Drives or the appropriate Technical Manual.

Motor Field Connections

The FIELD CONTROL function block controls the motor field. The FLD CTRL MODE IS parameter allows you to select either Voltage or Current Control mode.

- In Voltage Control mode, the RATIO OUT/IN parameter is used to scale the motor field output voltage as a percentage of the input supply voltage.
- In Current Control mode, the SETPOINT parameter is used to set an absolute motor field output current, expressed as a percentage of the calibrated field current (IF CAL).

Internal/External Supply

The internal motor field is more widely used, however, there is provision on the Control Board for an external motor field supply to be connected (perhaps for where the field voltage is greater than the input voltage and therefore not attainable, or where the motor field is switched separately for convenience).

Note: *For information about the following power boards refer to Chapter 11: "Technical Specifications" - Power Board Types, and Terminal Information (Power Board).*

Power Board - PCB Reference 385851

This power board (printed with the above number) can be altered for use with either an internal or external motor field supply:

Internal Motor Field (default for this board)

Terminals D3 and D4, the motor field outputs, are energised when the 3-phase supply to L1/L2/L3 is energised and the internal motor field is used. Terminals D1 and D2 are not energised. The internal motor field supply is fused by the 10A fuses, FS2 & FS3.

External Motor Field Connections

Terminals D1 and D2 on the Power Board can be used for an external ac supply connection for the Motor Field Supply.

A simple re-wiring procedure disconnects the internal motor field supply and prepares terminals D1 and D2 for the external ac supply connection.

You should provide suitably rated external, fast-acting semi-conductor fusing, to a maximum of 10A.

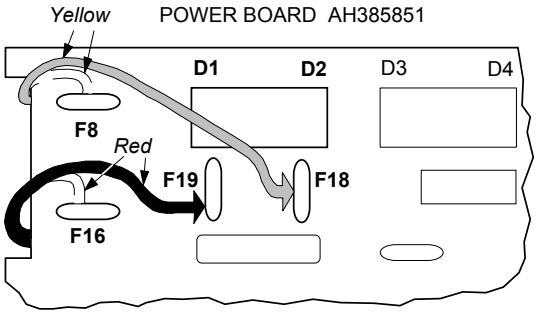

Re-Wiring Procedure

WARNING!
Isolate the drive.

1. Loosen the control board fixing screws (2 off) and position the control board to allow access to the power board.
2. Remove the **red** link from the Faston connector "F16" on the left-hand side of the board and connect it to staging post "F19", located below terminal D1.
3. Remove the **yellow** link wire from the Faston connector **"**F8" on the left-hand side of the board and connect it to staging post **"**F18", located below terminal D2.

Caution
When using an external ac input it is important to have the correct phase relationship on the terminals. The supply must be derived from L1 (Red) and L2 (Yellow) phases directly or indirectly through a transformer.
L1 must be connected to D1, and L2 connected to D2.

The external field supply can now be connected and power restored to the drive.

Power Board - PCB Reference 385621

This power board (printed with the above number) can be adjusted for use with an internal or external motor field supply:

Internal Motor Field (default for this board)

Terminals D3 and D4, the motor field outputs, are energised when the 3-phase supply to L1/L2/L3 is energised and the internal motor field is used. *Terminals D1 and D2 are also energised, but must not be used.* The internal motor field supply is fused by the 20A fuses, FS2 & FS3.

External Motor Field Connections

Terminals D1 and D2 on the Power Board can be used for an external ac supply connection for the Motor Field Supply.

A simple re-wiring procedure disconnects the internal motor field supply and prepares terminals D1 and D2 for the external ac supply connection.

You should provide suitably rated external, fast-acting semi-conductor fusing, to a maximum of 20A.

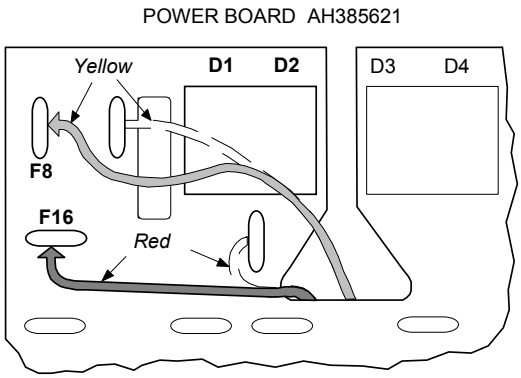

Re-Wiring Procedure

WARNING!
Isolate the drive.

1. Loosen the control board fixing screws (2 off) and position the control board to allow access to the power board.
2. Remove the **yellow** link wire from the Faston connector to the left-hand side of terminal D1 and connect it to staging post “F8”, located on the left of the board.
3. Remove the **red** link from the Faston connector at the mid-point between terminals D1 and D2 and connect it to staging post “F16”, located on the left of the board.

Caution
When using an external ac input it is important to have the correct phase relationship on the terminals. The supply must be derived from L1 (Red) and L2 (Yellow) phases directly or indirectly through a transformer.
L1 must be connected to D1, and L2 connected to D2.

The external field supply can now be connected and power restored to the drive.

Power Board - PCB Reference 385128

External Motor Field (default for this board)

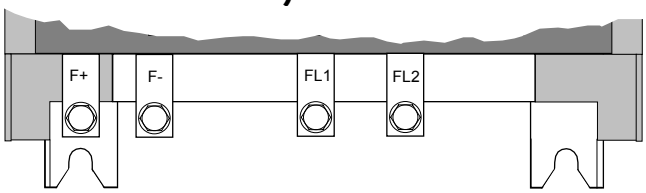

This power board (printed with the above number) is supplied in external stack options using an external motor field supply. Connect the external supply to busbars FL1 and FL2. The motor field output is taken from busbars F+ and F-.

You should provide suitably rated external, fast-acting semi-conductor fusing, to a maximum of 20A.

Caution

When using an external ac input it is important to have the correct phase relationship on the terminals. The supply must be derived from L1 (Red) and L2 (Yellow) phases directly or indirectly through a transformer.

L1 must be connected to D1, and L2 connected to D2.

DC Contactor - External VA Sensing

Connections are provided for external armature voltage sensing (at the motor) for when a dc contactor is used between the drive and motor.

Power Board - PCB Reference 385851

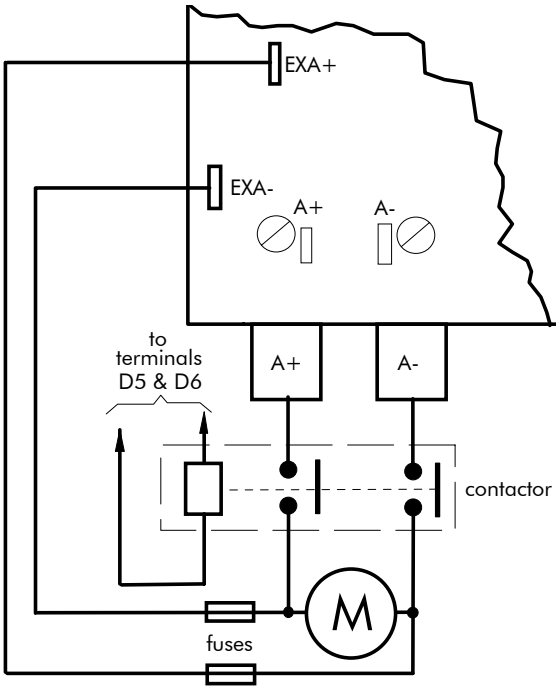

Power Board - PCB Reference 385621

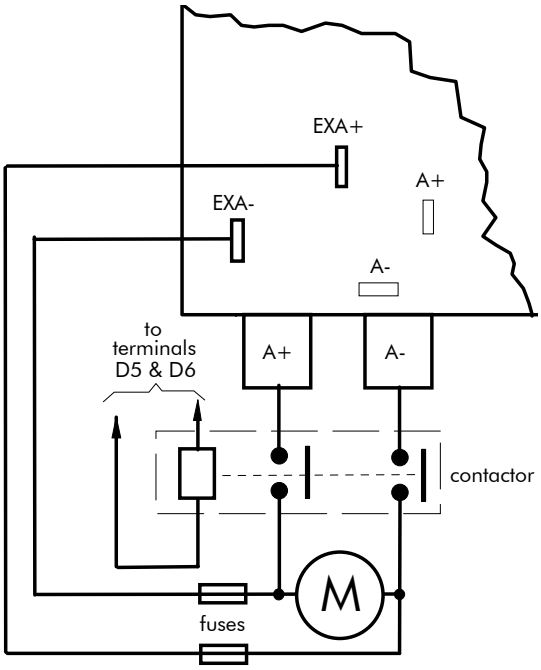

External AC Supply EMC Filter Installation

Refer to Chapter 11: "Technical Specifications" - Environmental Details, and External AC Supply (RFI) Filters and Line Choke for selection details.

A filter is used with the Converter to reduce the line conducted emissions produced by the Converter. Filters are used in parallel on the higher current Converters. When installed correctly and used with the specified 2% minimum line chokes, conformance with EN55011 Class A can be achieved (suitable for both generic environments: RF Emission and Immunity).

Cubicle-Mounting the 590 Converter with Filter

WARNING!

Do not touch filter terminals or cabling for at least 3 minutes after removing the ac supply.

The CO389456 filter flying leads can reach 100°C under normal operating conditions. Leads should be separated to at least one cable diameter and adequately ventilated. Never bunch leads together.

Only use the ac supply filter with a permanent earth connection.

The filter should be fitted on the mains side of the contactor.

The Converter must be mounted vertically on a solid, flat, vertical surface. It must be installed into a cubicle.

The recommended EMC filter is mounted to the left, right, above, below, or spaced behind the Converter. It can be mounted flat against the surface, or projecting out from the surface if the filter type has side fixings.

1. Mount the filter securely at the four fixing points (flat or on its side).
2. Mount the Converter next to the filter, allowing for the required airgap between the Converter, the filter and any adjacent equipment.

Note: *When filters CO389456 are mounted in parallel, they should be spaced 40mm apart for ventilation.*

Connection Details

The connection between the Converter, choke and filter must always be as short as possible and **must be segregated from all other cables**. Ideally, mount the filter and choke onto the same metallic panel as the Converter. Take care not to obstruct any ventilation spacing.

If this cable/busbar exceeds 0.6m in length, it must be replaced with a screened/armoured cable. The screen/armour must be earthed at both the filter, choke and Converter ends with large-area contact surfaces, preferably with metal cable glands.

You should enhance the RF connection between the Converter, choke, filter and panel as follows:

1. Remove any paint/insulation between the mounting points of the EMC filter, choke, Converter and the panel. Liberally apply petroleum jelly over the mounting points and securing threads. This will prevent corrosion. Alternatively, conducting paint could be used on the panel.
2. If **1** above is not possible, then improve the RF earth bond between the filter and Converter by making an additional RF earth connection. Use wire braid of at least 10mm² cross-sectional area.

Note: *Metal surfaces, such as anodised or yellow chromed (with cable mounting or 35mm DIN rails, screws and bolts) have a high impedance which can be very detrimental to EMC performance.*

3. A low RF impedance path must be provided between the motor frame and back panel on which the drive, choke and EMC filters are mounted. This low impedance RF path should follow the path of the motor cables in order to minimise the loop area. **Failure to do so will result in increased conducted emissions.**

   A low RF impedance path will normally be achieved by:

   ■ Bonding the armour of the motor supply cables at one end to the motor frame, and at the other end to the cubicle back panel. Ideally 360° bonding is required, which can be achieved with cable glands, refer to Figure 3-3 360 Degree Screened Connection, page 3-3.

   ■ Ensuring that conduit containing the motor supply cables are bonded together using braid. The conduit should also be bonded to the motor frame and the cubicle back panel.

Earthing Details

The protective earth (PE) conductor exiting the filter must be connected to the protective earth connection of the Converter. Any additional RF earth, such as a cable screen, **is not a protective earth**. The EMC filter must be **permanently earthed** to prevent the risk of electric shock under abnormal operating instances (such as the loss of one phase of the ac supply).

You can achieve permanent earthing by either:

- using a copper protective earth conductor of at least 10mm²
- installing a second conductor, in parallel connection with the protective conductor, to a separate protective earth terminal

Each conductor must independently meet the requirements for a protective earth conductor.

Operating Conditions

The recommended EMC filters operate from normal three-phases supplies which are balanced with respect to earth (earth referenced supplies - TN). This minimises the earth leakage current due to the filter capacitors between phase and earth.

IMPORTANT: We do not recommend the use of ac supply filters on non earth-referenced supplies - IT. The supplies cause earth leakage currents to increase, and interfere with the operation of earth fault monitoring equipment. In addition, EMC performance of the filter is degraded.

As with all power electronic drives, conducted emissions increase with motor cable length. EMC conformance is only guaranteed up to a cable length of 50m. The cable length can be increased. Refer to Parker SSD Drives for more information.

Earth Fault Monitoring Systems

WARNING!
Circuit breakers used with VSDs and other similar equipment are not suitable for personnel protection. Use another means to provide personal safety. Refer to EN50178 (1998) / VDE0160 (1994) / EN60204-1 (1994)

We do not recommend the use of circuit breakers (e.g. RCD, ELCB, GFCI), but where their use is mandatory, they should:

- Operate correctly with dc and ac protective earth currents (i.e. type B RCDs as in Amendment 2 of IEC755).
- Have adjustable trip amplitude and time characteristics to prevent nuisance tripping on switch-on.

When the ac supply is switched on, a pulse of current flows to earth to charge the EMC filter internal capacitors which are connected between phase and earth. This has been minimised in Parker SSD Drives filters, but may still trip out any circuit breaker in the earth system. In addition, high frequency and dc components of earth leakage currents will flow under normal operating conditions. Under certain fault conditions larger dc protective earth currents may flow. The protective function of some circuit breakers cannot be guaranteed under such operating conditions.

Installation Drawings

Converter Installation Drawings

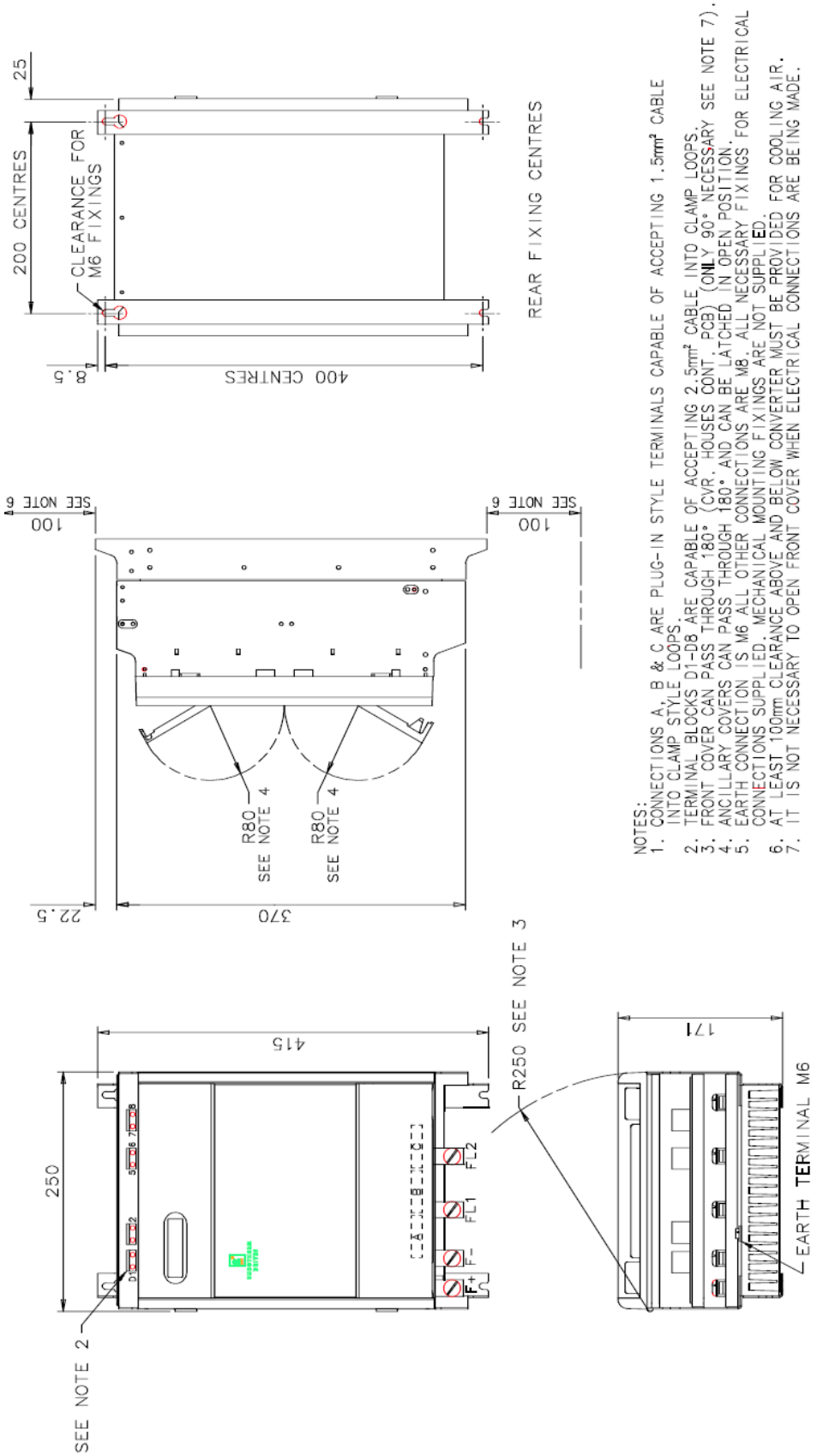

Figure 3-5 35A & 70A Stack Assembly

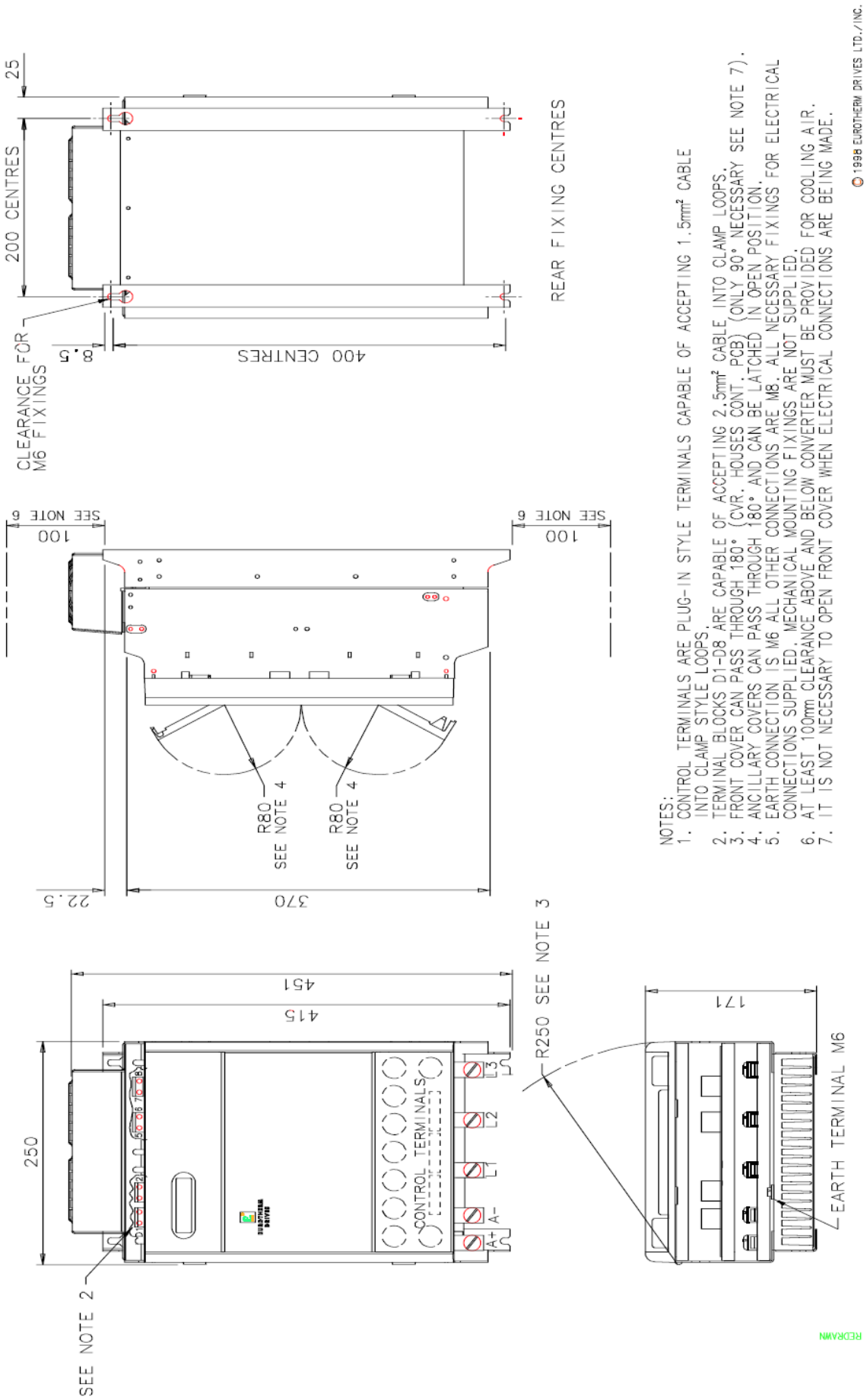

Figure 3-6 110A & 150A Stack Assembly

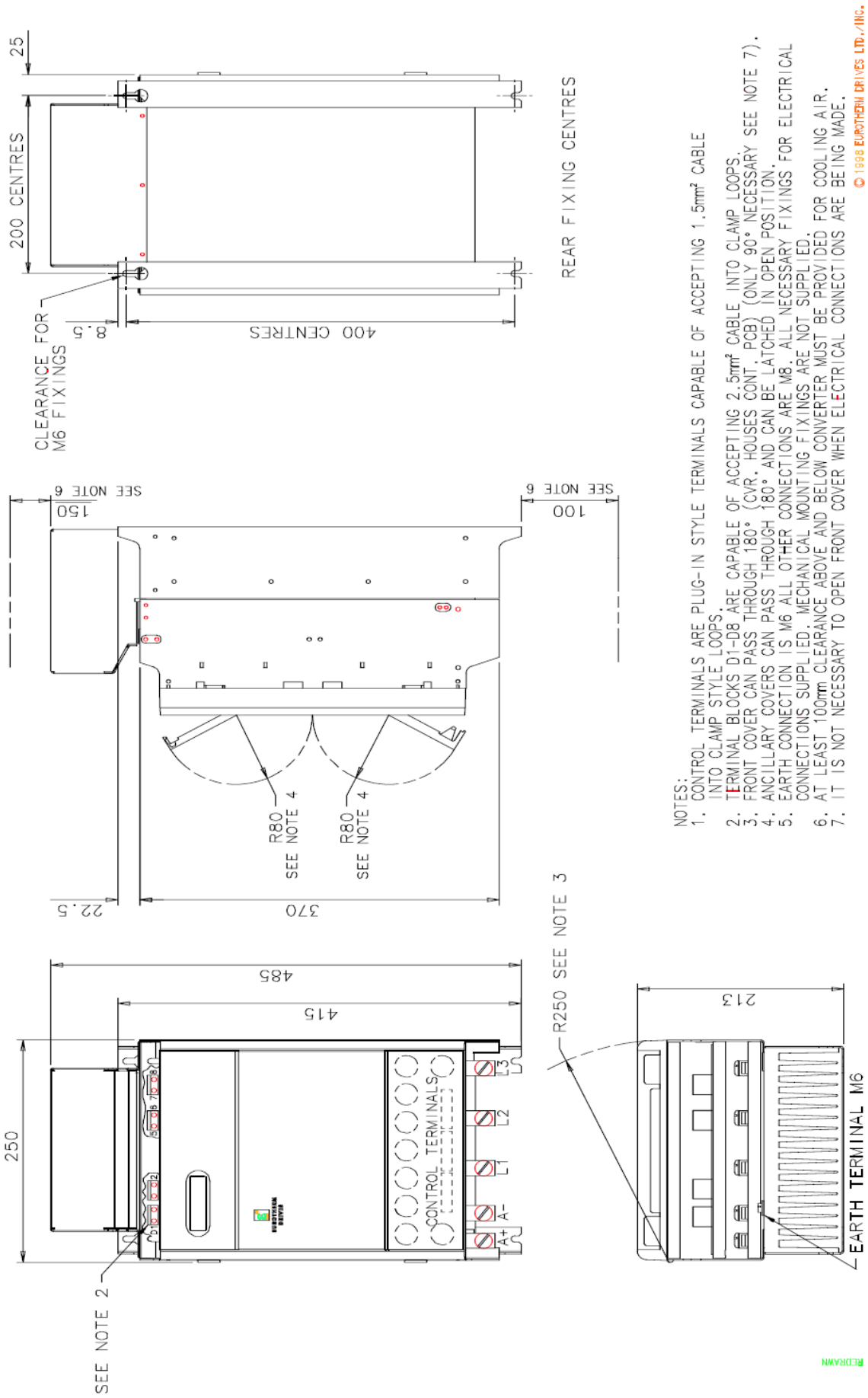

Figure 3-7 180A Stack Assembly

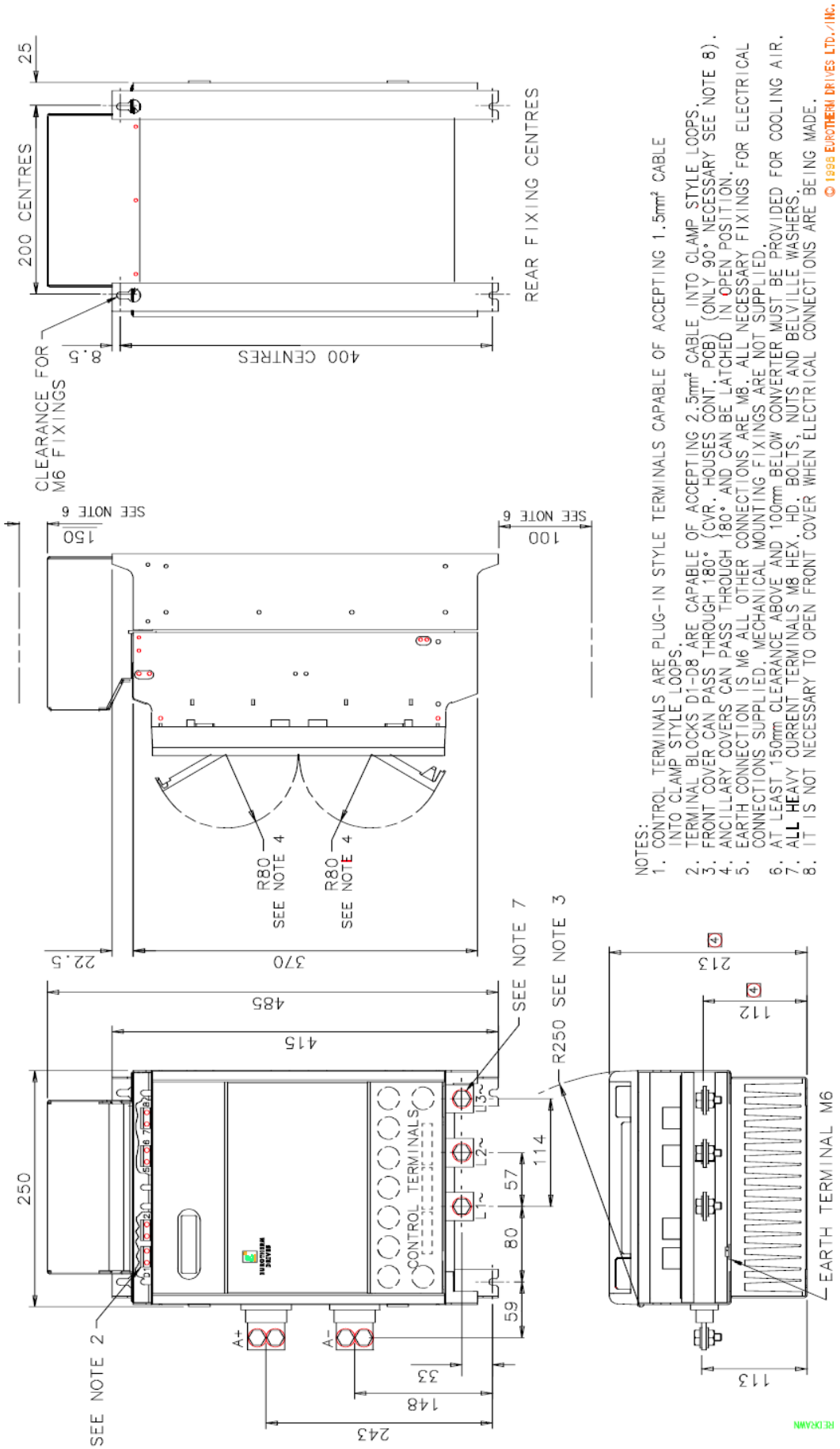

Figure 3-8 270A Stack Assembly

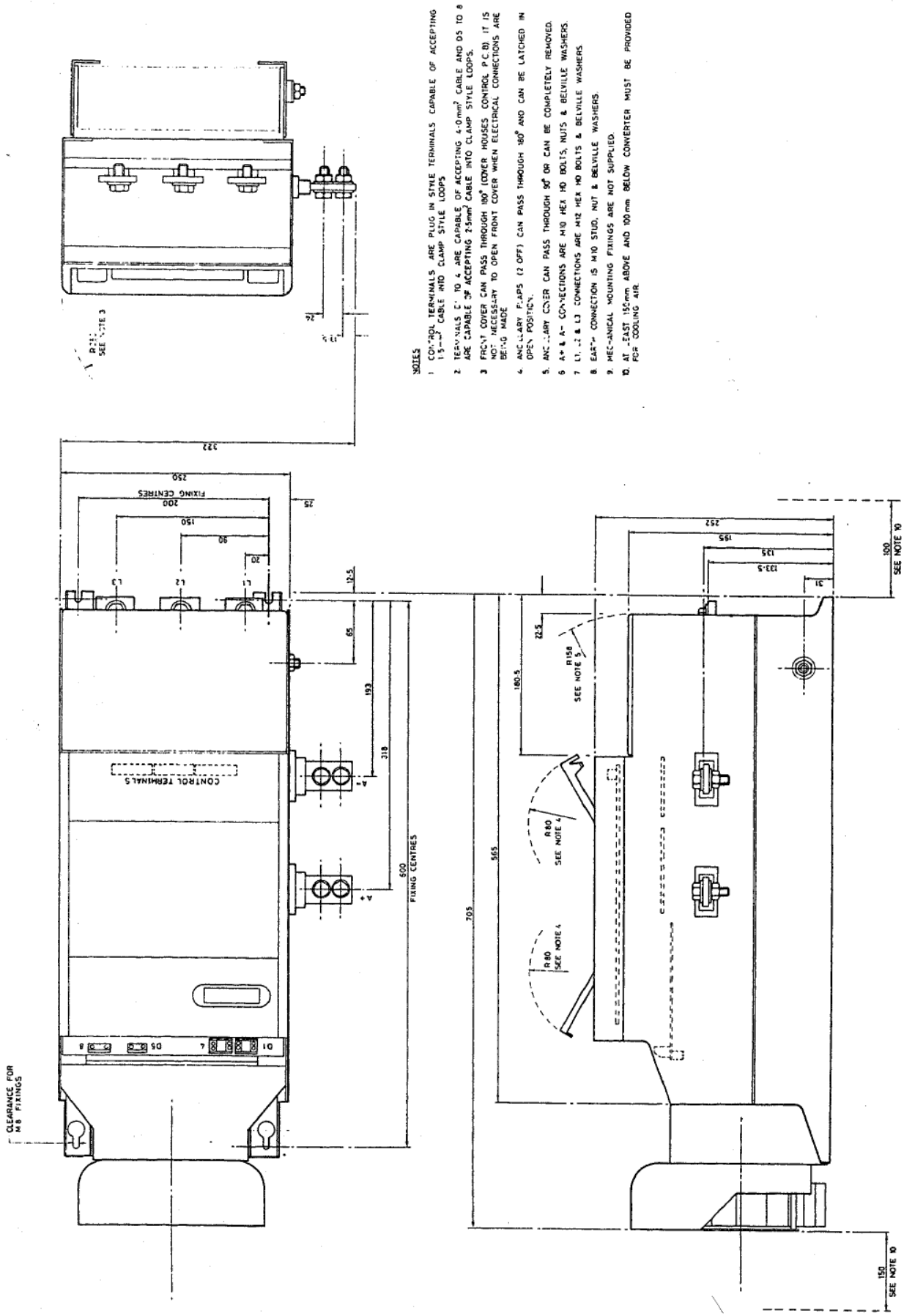

Figure 3-9 360A Stack Assembly

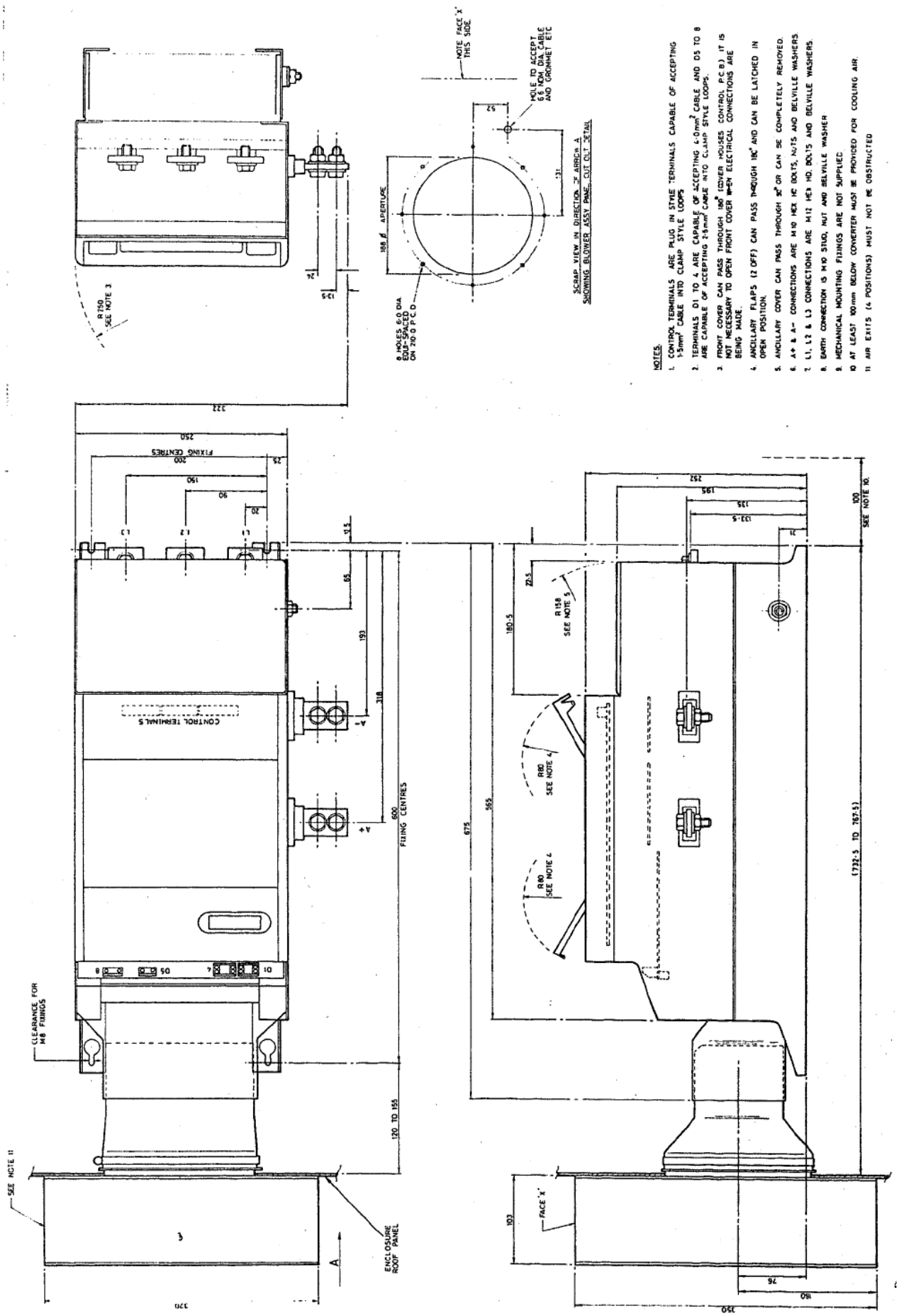

Figure 3-10 450A Stack Assembly

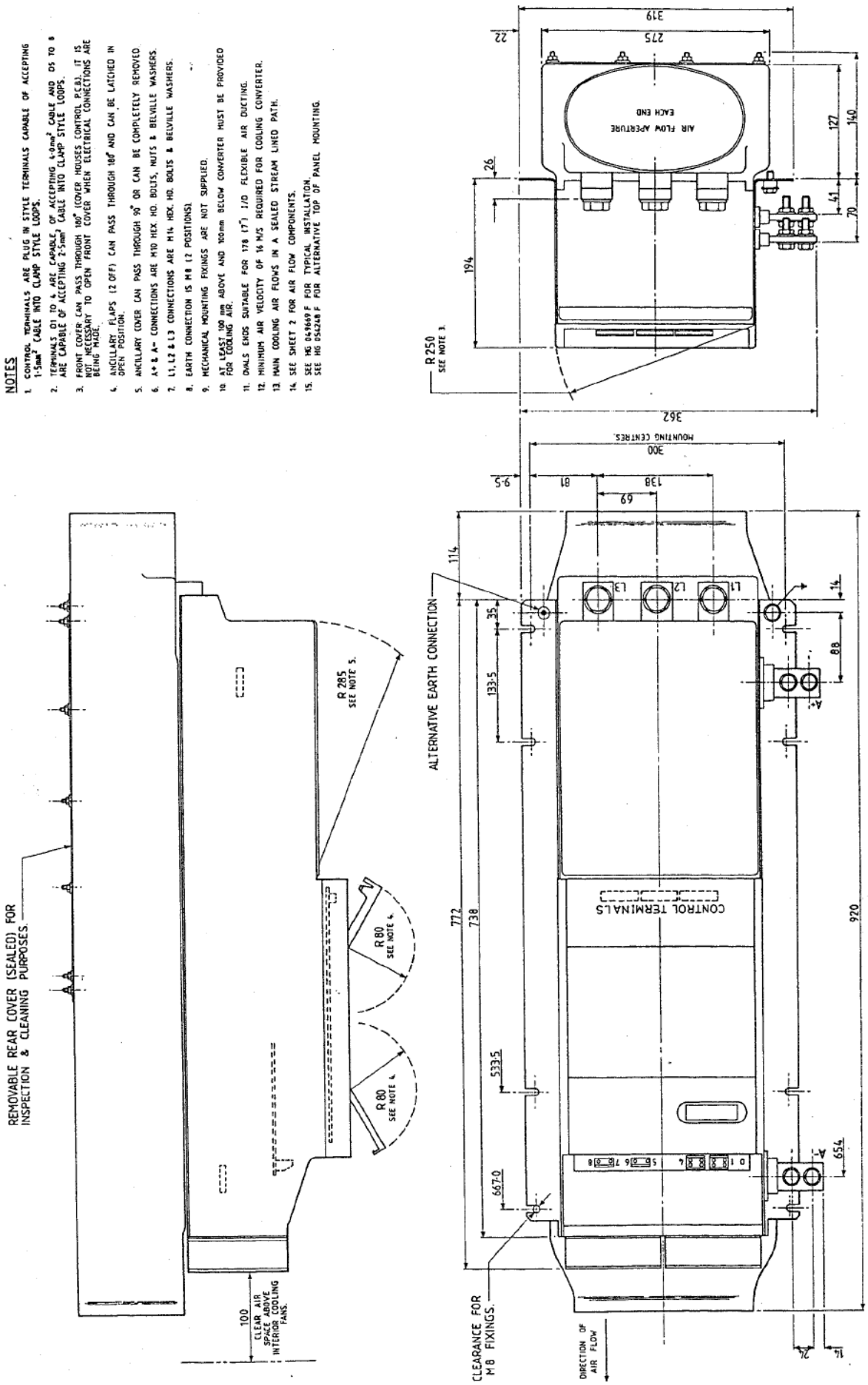

Figure 3-11 720A Stack Outline Drawing

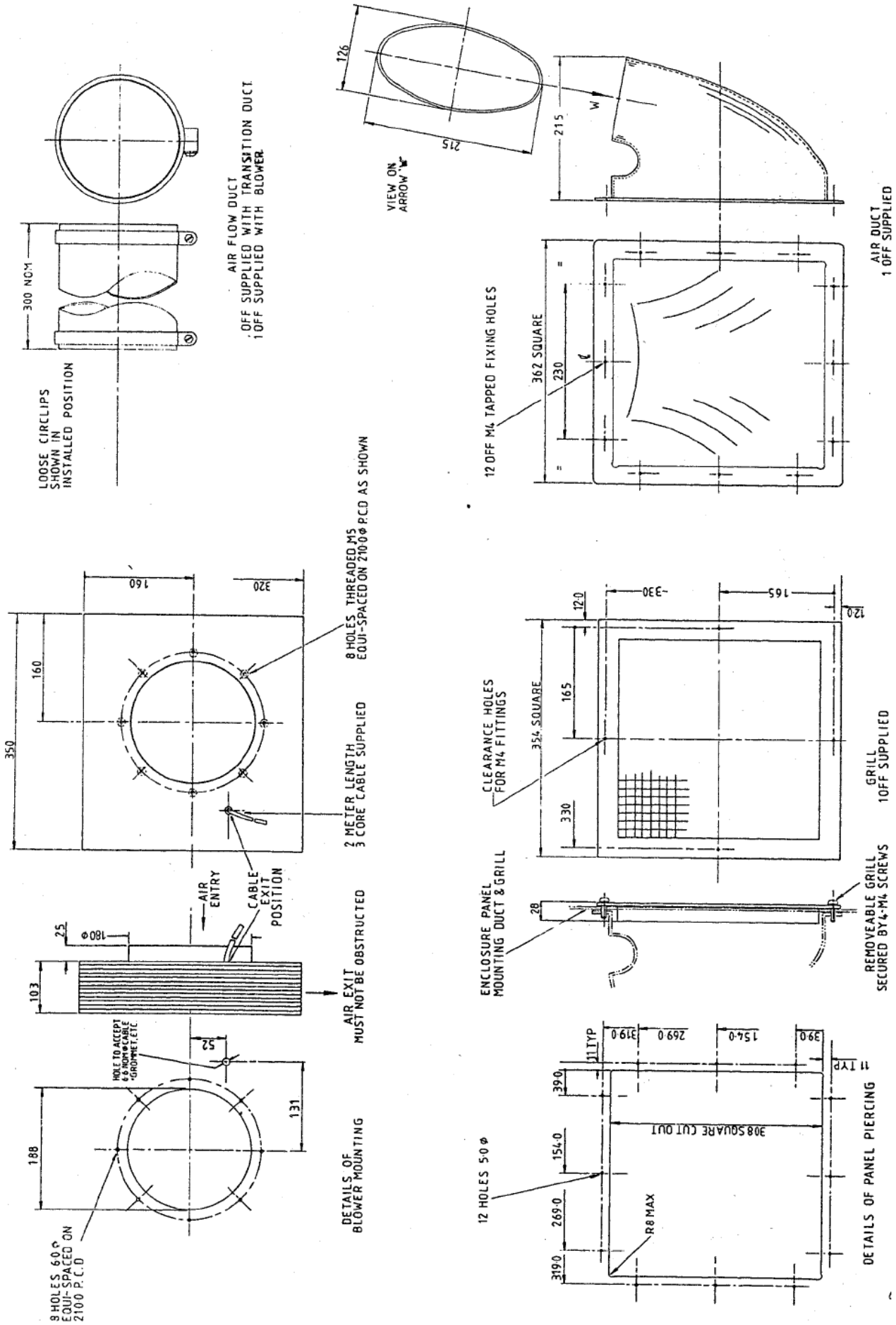

Figure 3-12 720A Stack Outline Drawing

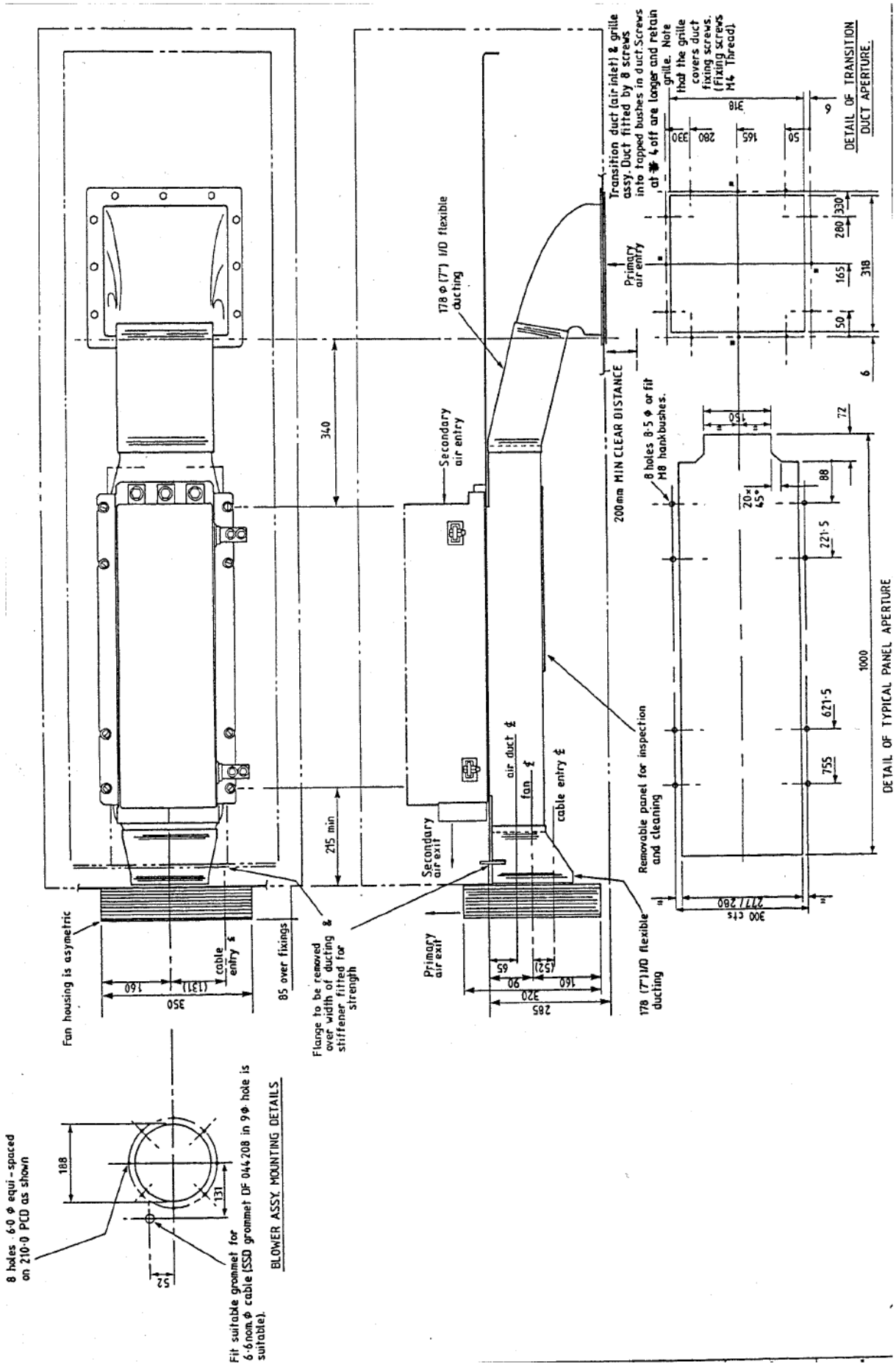

Figure 3-13 720A Stack Assembly - Standard Mounting

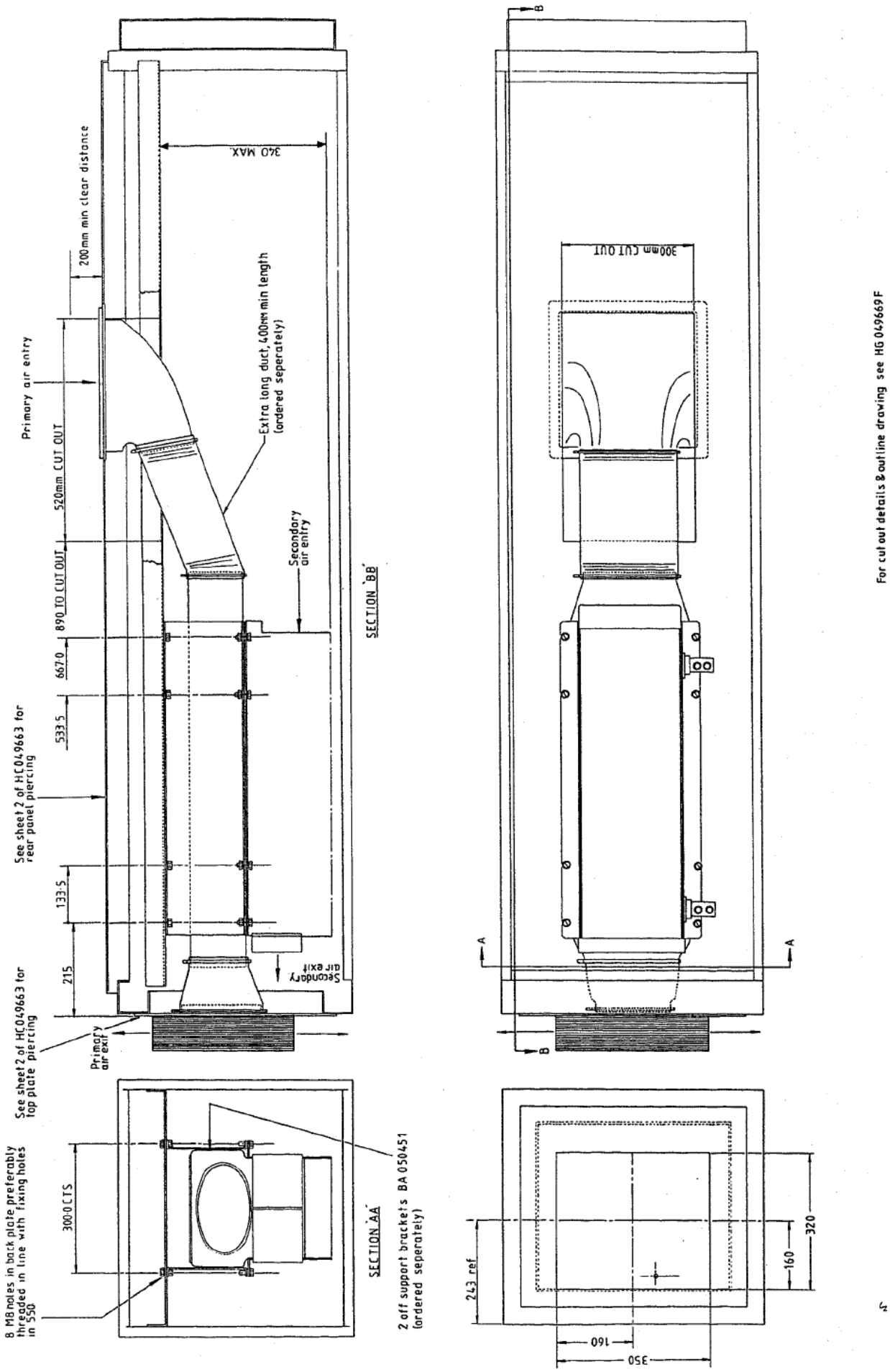

Figure 3-14 720A Stack Assembly - Installation Drawing

External Stack Installation Drawings

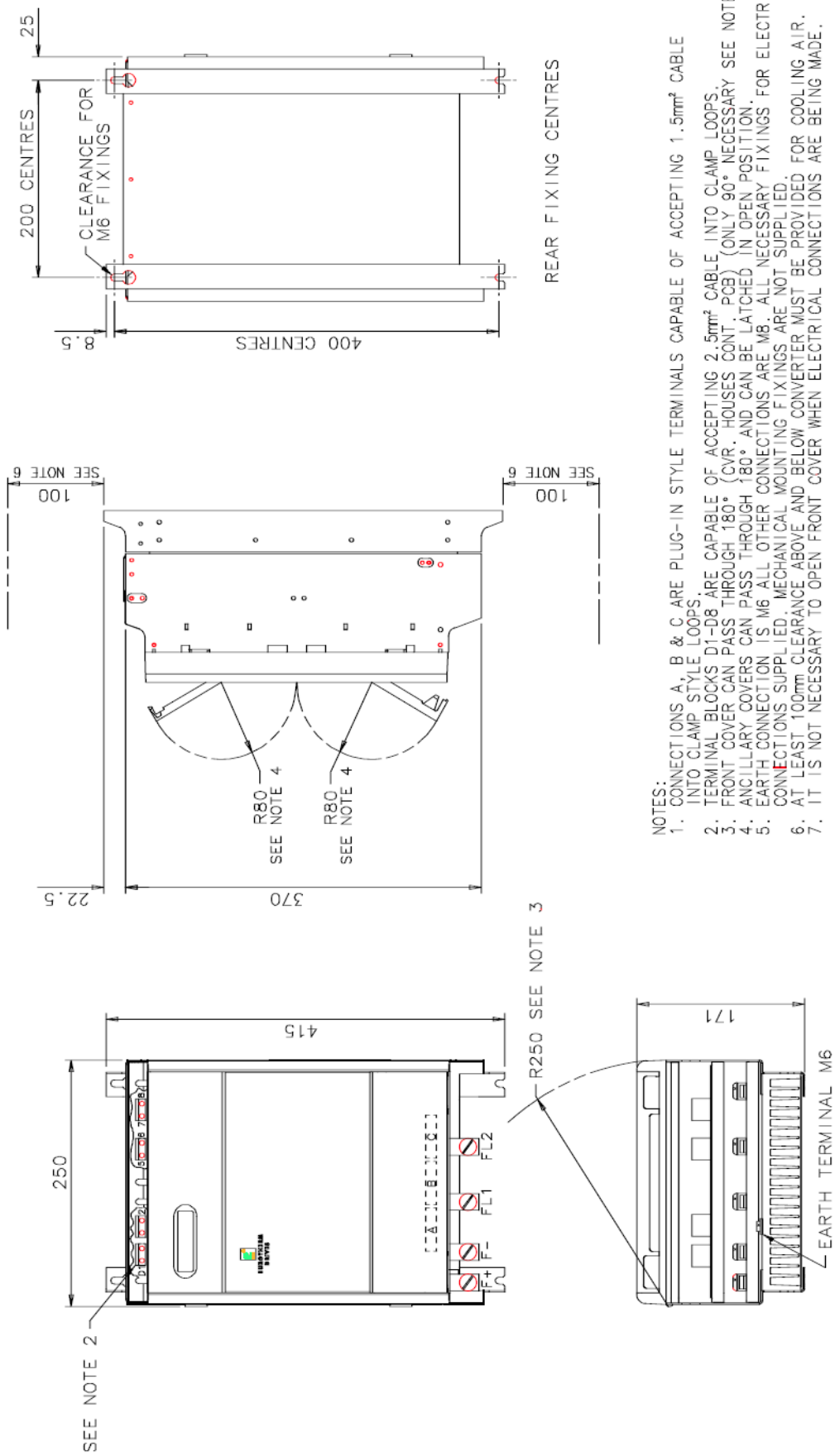

Figure 3-15 External Stack Assembly

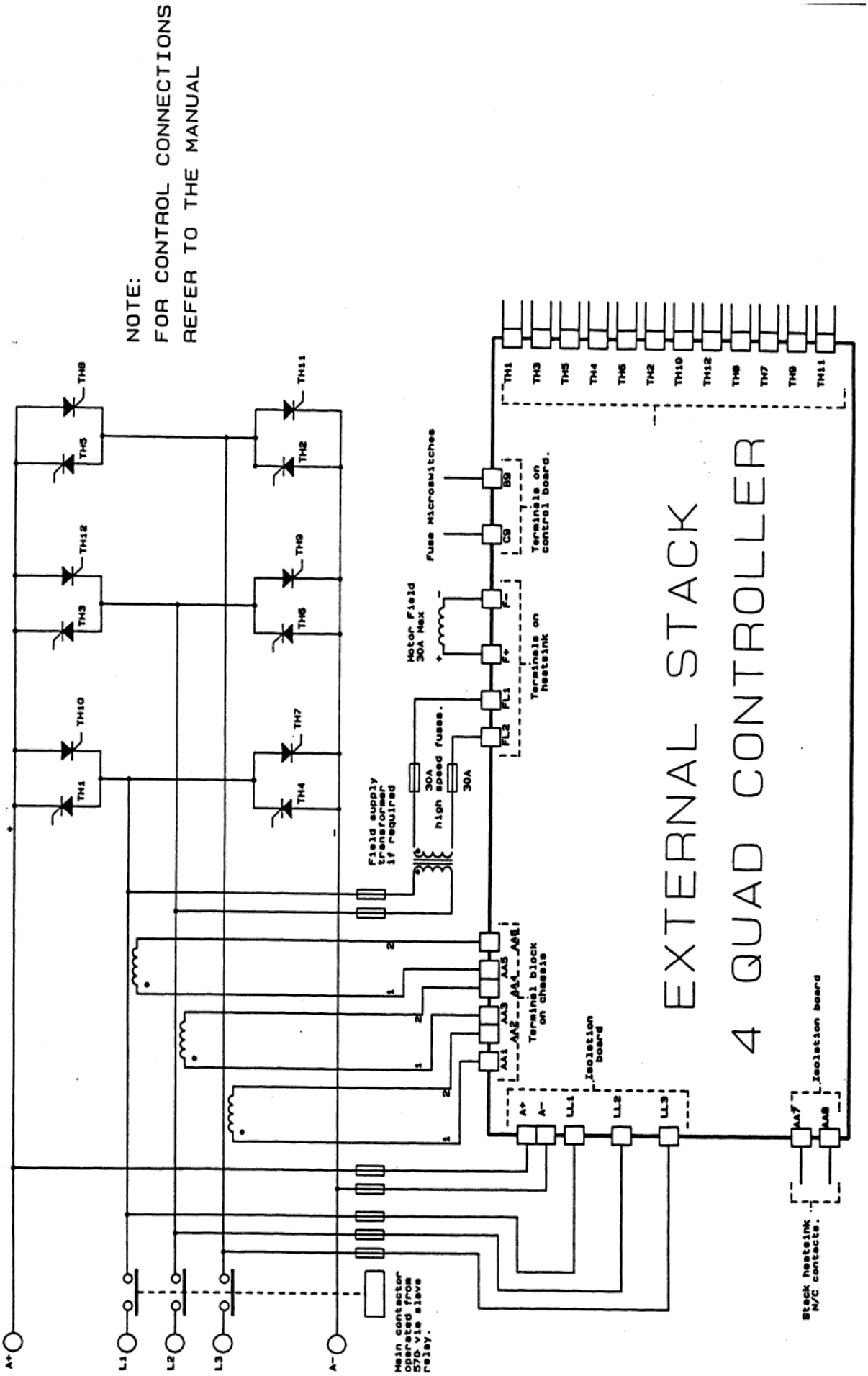

Figure 3-16 Wiring Diagram for 4 Quad External Stack

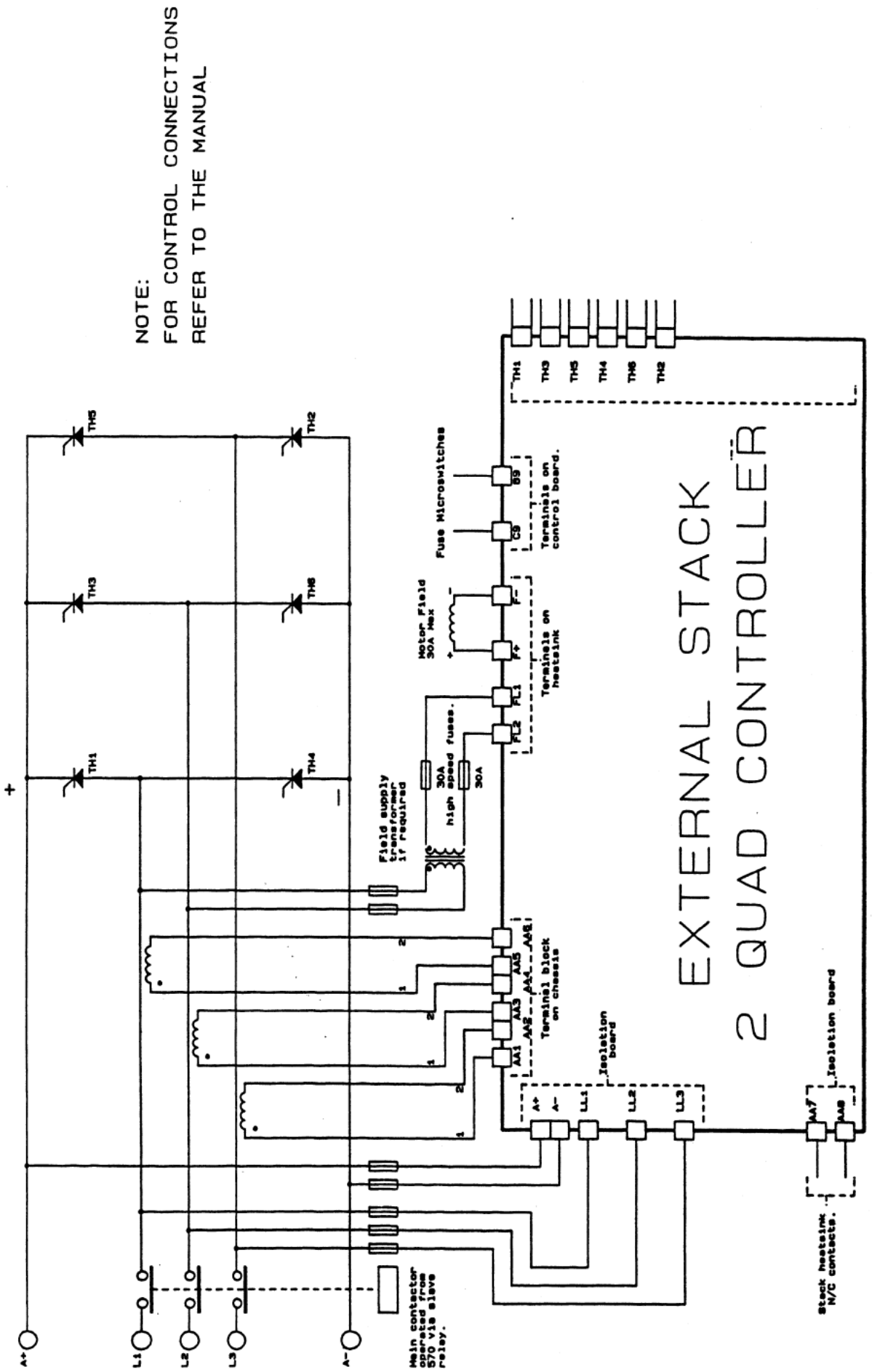

Figure 3-17 Wiring Diagram for 2 Quad External Stack

Filter Installation Drawings

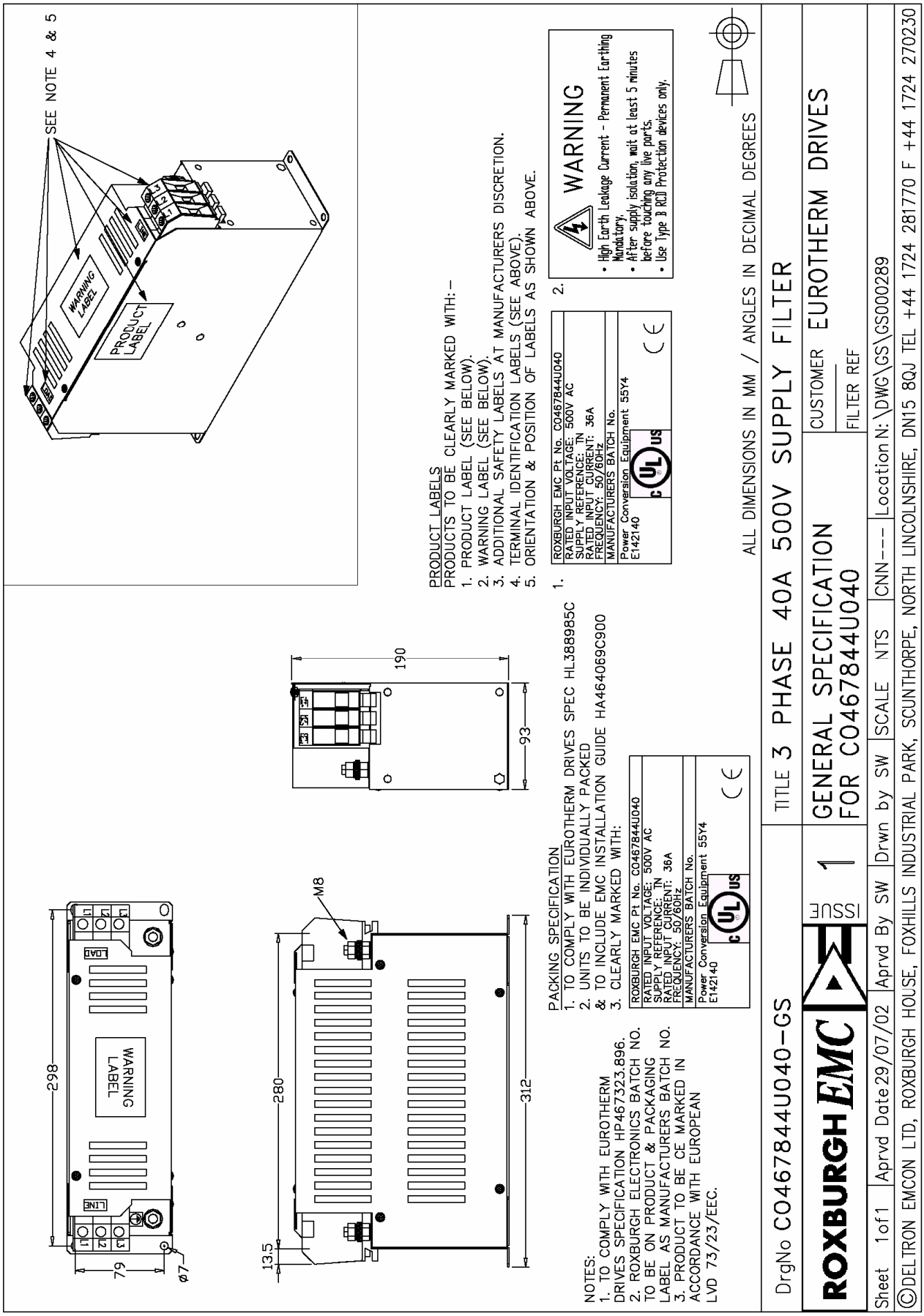

Figure 3-18 Filter Mounting Details, Part No. CO467844U040 for 590 35 Amp

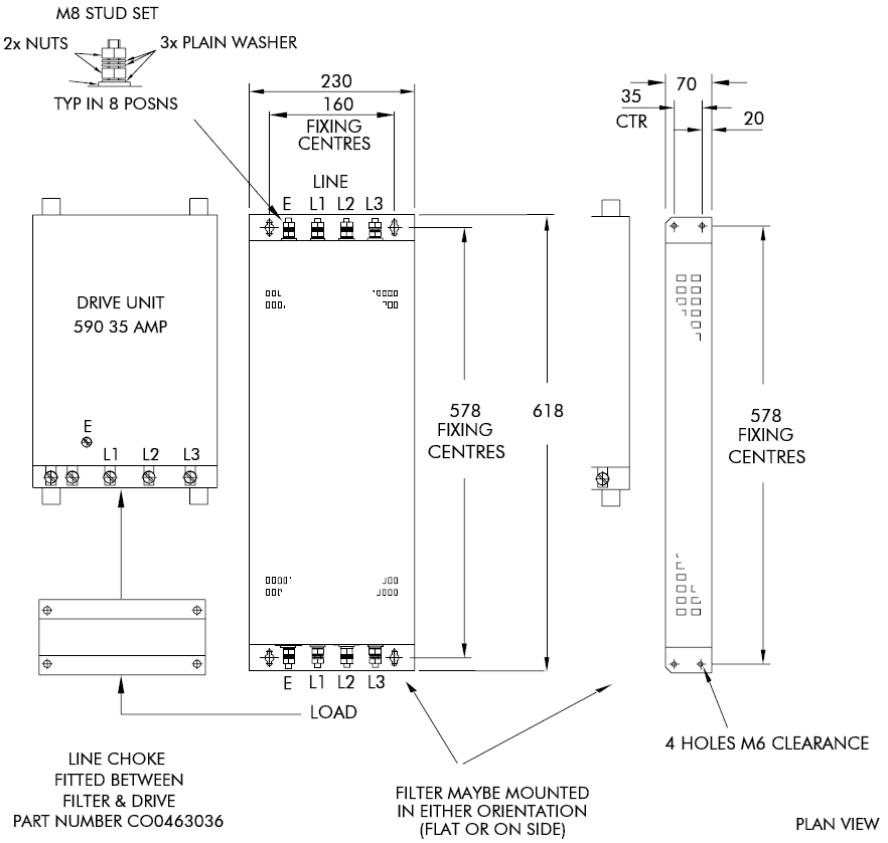

Figure 3-19 Filter Mounting Details, Part No. CO388965U035 for 590 35 Amp

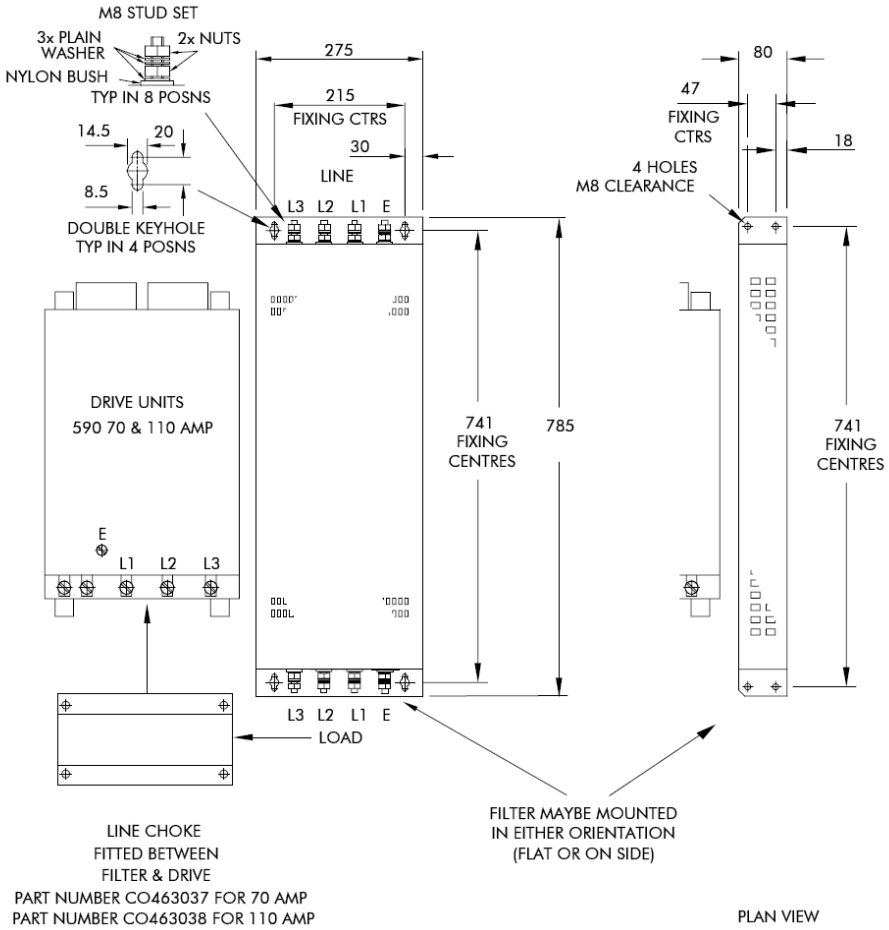

Figure 3-20 Filter Mounting Details, Part No. CO388965U110 for 590 70 & 110 Amp

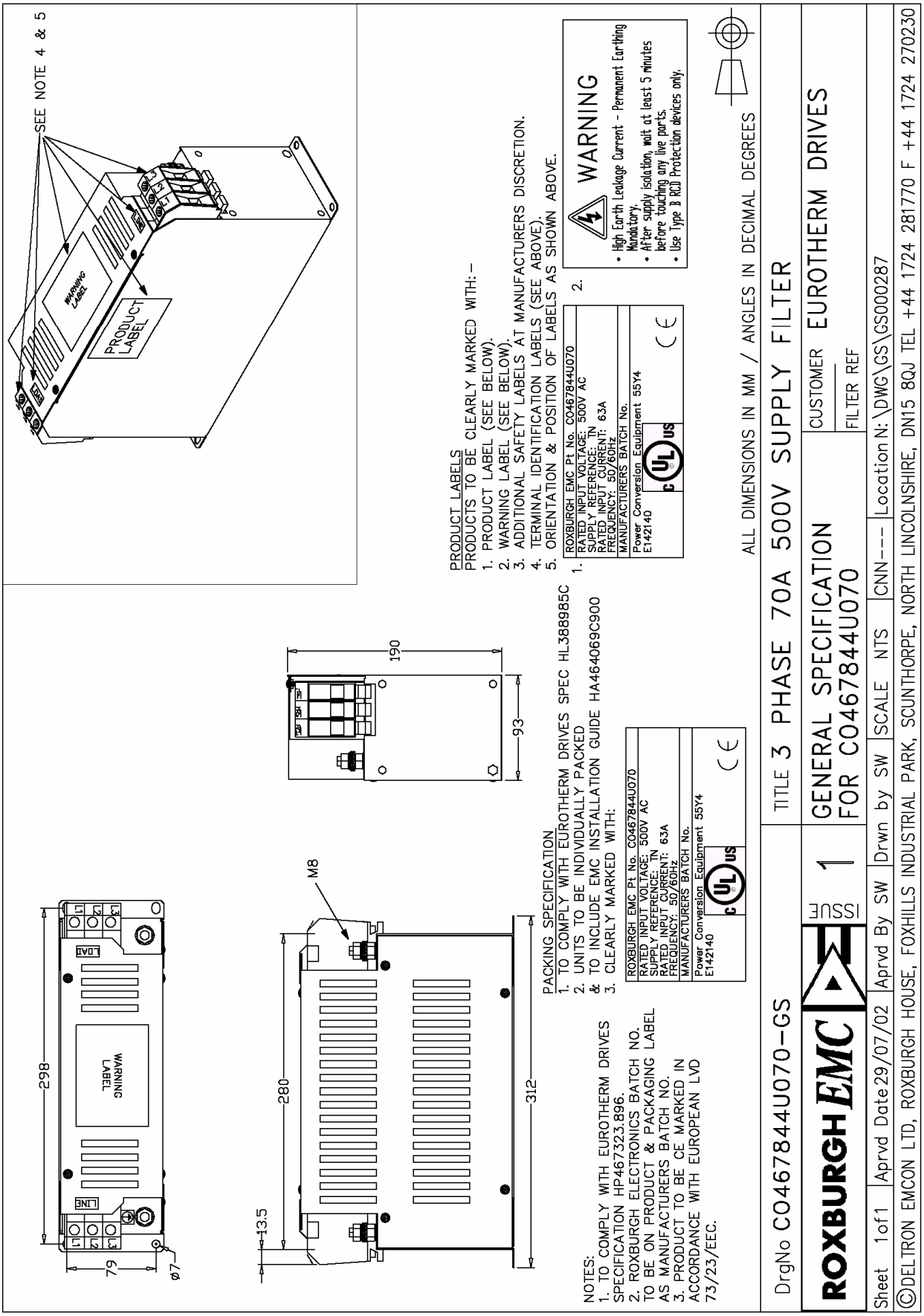

Figure 3-21 Filter Mounting Details, Part No. CO467844U070 for 590 70 Amp

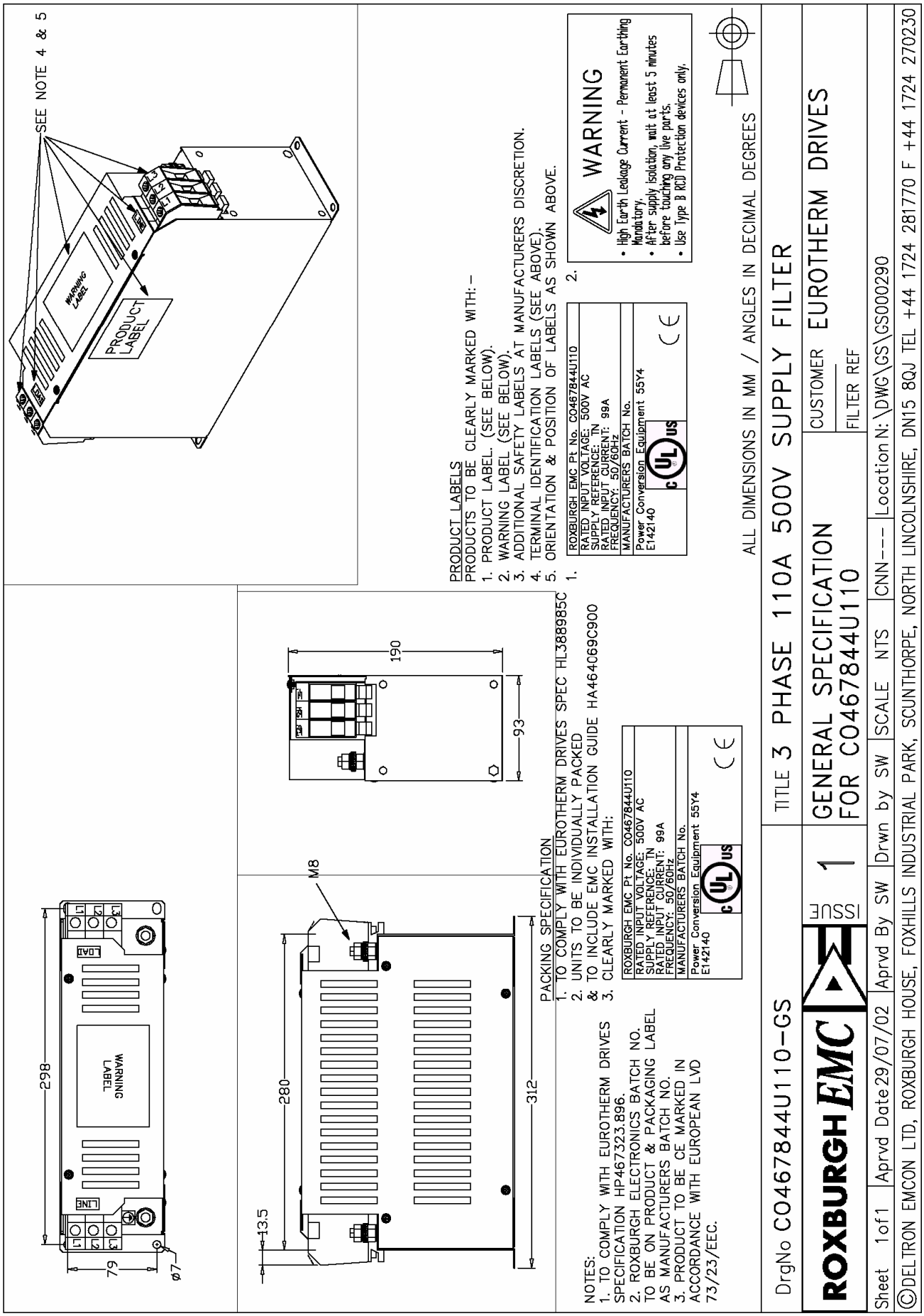

Figure 3-22 Filter Mounting Details, Part No. CO467844U110 for 590 110 Amp

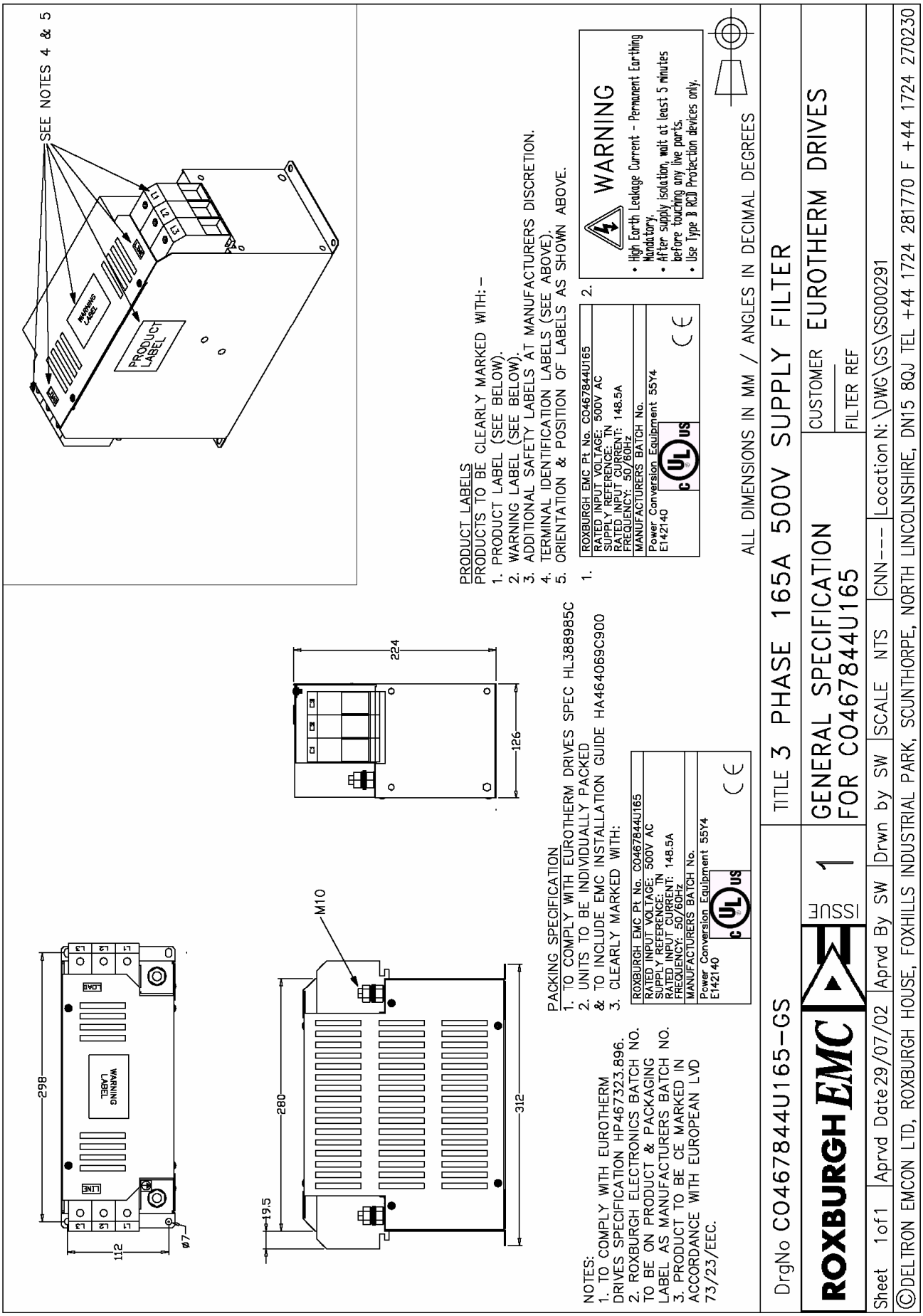

Figure 3-23 Filter Mounting Details, Part No. CO467844U165 for 590 150 Amp

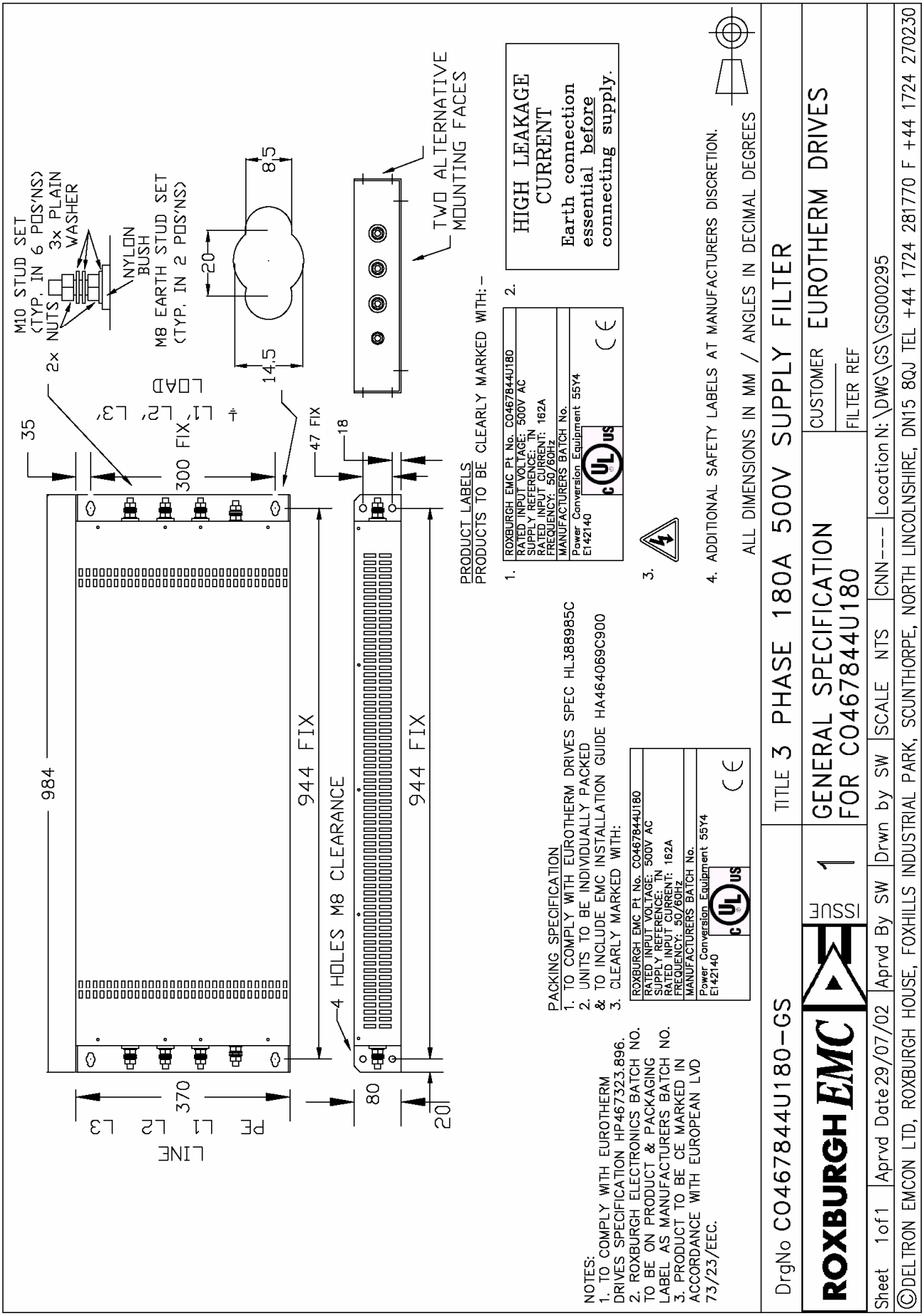

Figure 3-24 Filter Mounting Details, Part No. CO467844U180 for 590 180 Amp

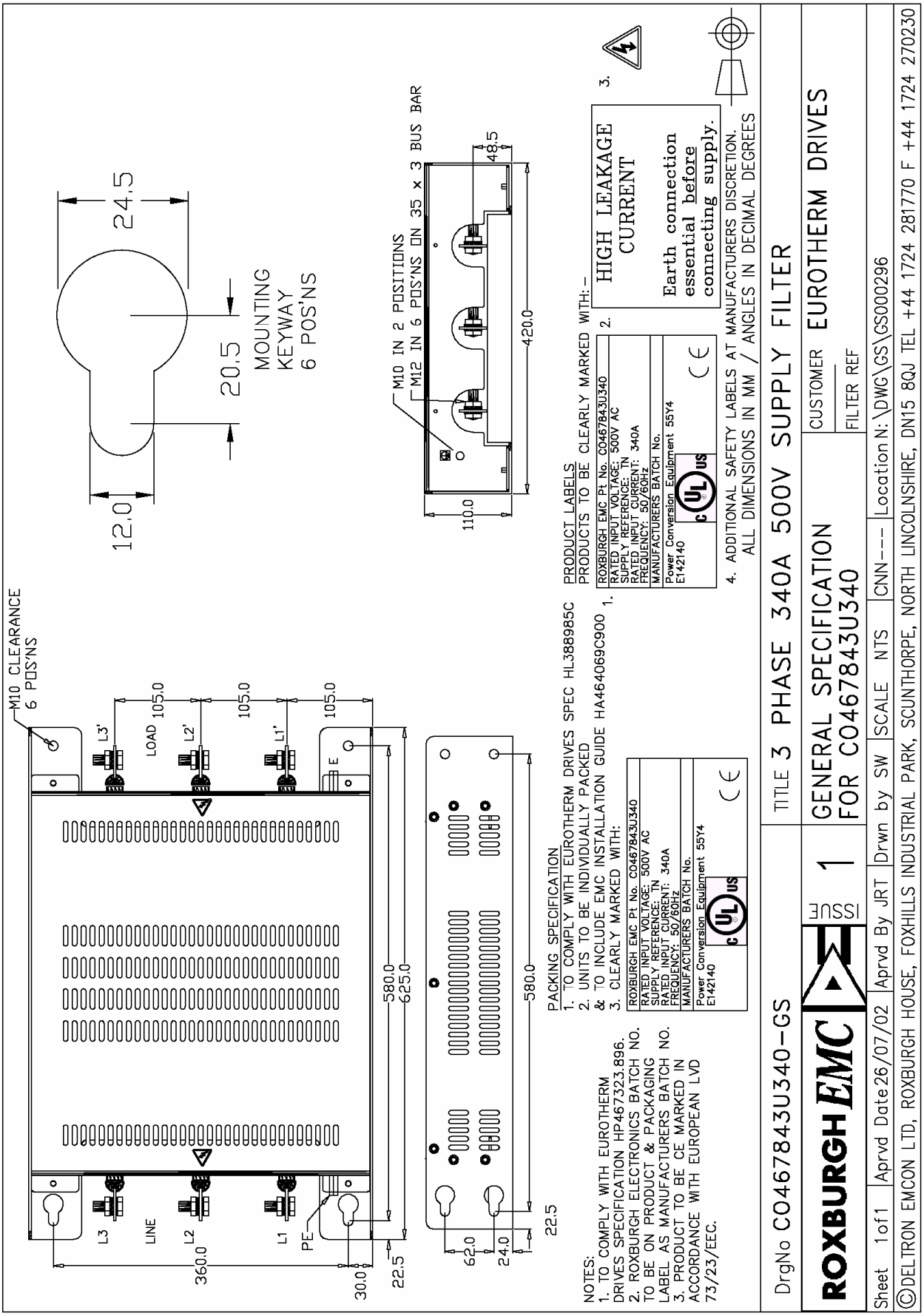

Figure 3-25 Filter Mounting Details, Part No. CO467843U340
Frame 3 : 270 Amp (1 filter) and Frame 4 : 380-830 Amp (2 filter)
(refer to Chapter 11: "Technical Specifications" - External AC Supply (RFI) Filters)

AC Line Choke Installation Drawing

IMPORTANT: Always use the specified ac line choke with the Converter.

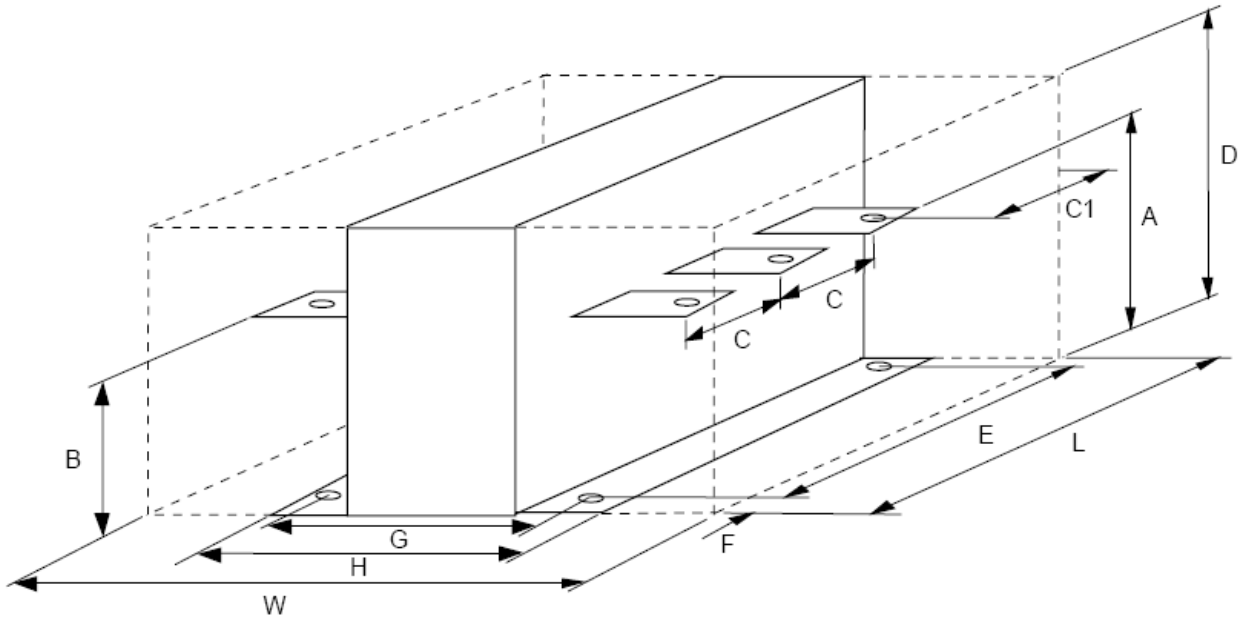

Choke Type	Rating (DC)	Dimensions (mm)												Mtg Hole Ø	Terminal Ø
			A	B	C	C1	D	E	F	G	H	L	W		
CO055192	35A	50µH			50	27.5	130	140	7.5	50	70	155	260	Ø7	M8
CO055193	70A	50µH			50	27.5	130	140	7.5	72.5	92.5	155	302.5	Ø7	M8
CO055253	110A	50µH	108	85	60	35	160	170	10	76	101	190	341	Ø9	M6 I/P & M8 O/P
CO055255	180A	50µH	108	85	60	35	160	170	10	101	127	190	366	Ø9	M6 I/P & M8 O/P
CO057960	270A	50µH	110	110	80	60	255	200	40	170	200	280	380	Ø13	M8
CO387886	360A	50µH	135	145	80	60	255	200	40	170	200	280	380	Ø13	Ø11/Ø13
CO057962	550A	25µH	200	157	110	73	306	250	58	189	220	366	398	Ø13	Ø13
CO057963	720A	25µH	200	157	110	73	306	250	58	189	220	366	398	Ø13	Ø13
For use with EMC filters															
CO463036	35A	485µH	108	85	60	35	160	170	10	76	101	190	341	Ø9	M8
CO463037	70A	242µH	108	85	60	35	160	170	10	90	116	190	355	Ø9	M8
CO463038	110A	154µH	108	85	60	35	160	170	10	102	128	190	367	Ø9	M8
CO463039	180A	113µH	108	85	57	37	255	200	40	170	200	280	380	Ø13	M6 I/P & M8 O/P

Figure 3-26 Fitting details for the AC Line Choke

590 Capacitor Box

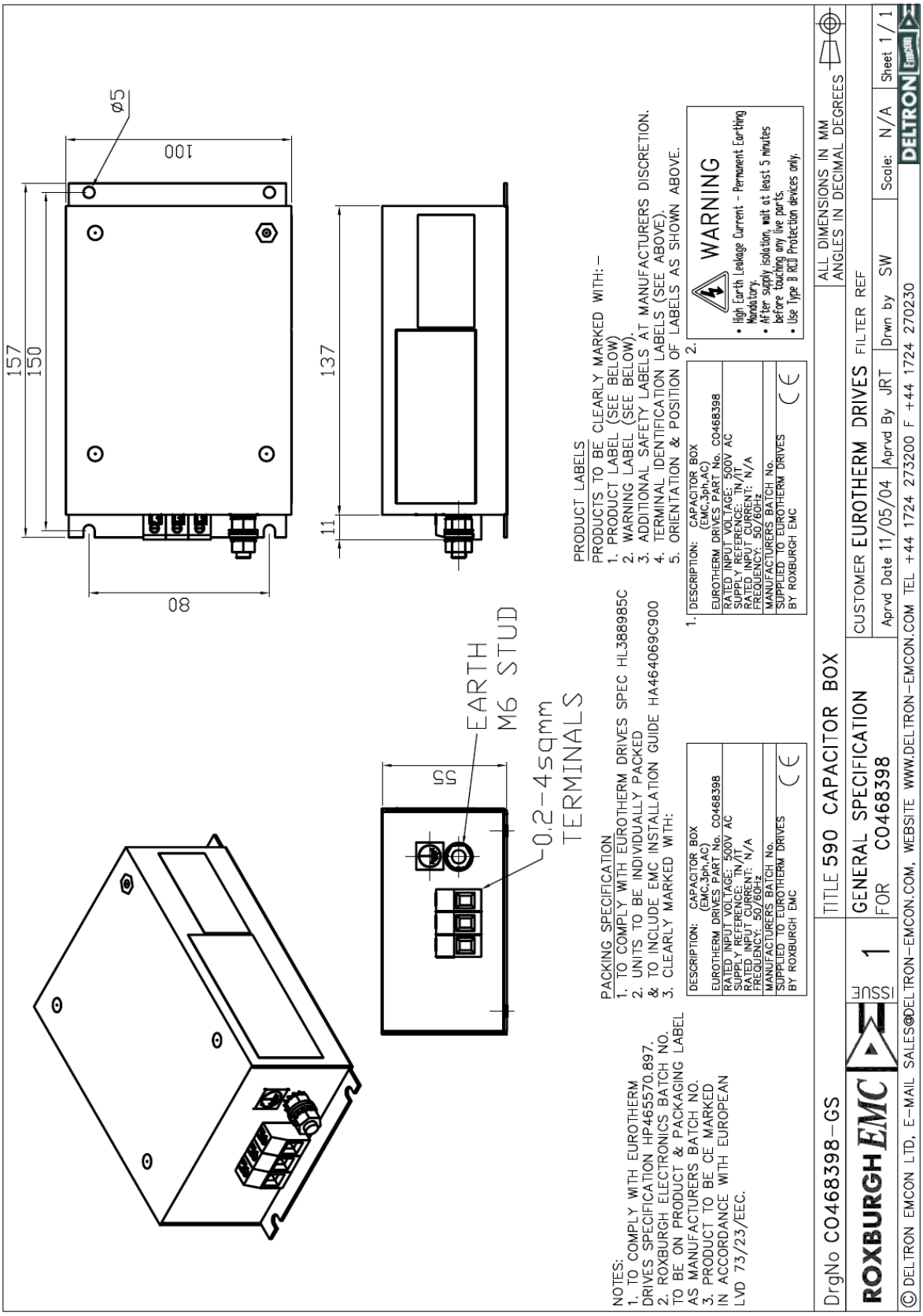

Figure 3-27 Capacitor Box for 590 : CO468398

OPERATING THE CONVERTER

Pre-Operation Checks

Initial checks before applying power:

- Mains power supply voltage is correct.
- Auxiliary power supply voltage is correct.
- Motor is of correct armature voltage and current rating.
- Check all external wiring circuits - power, control, motor and earth connections.

Note: *Completely disconnect the Converter before point-to-point checking with a buzzer, or when checking insulation with a Meggar.*

- Check for damage to equipment.
- Check for loose ends, clippings, drilling swarf etc. lodged in the Converter and system.
- If possible check that the motor can be turned freely, and that any cooling fans are intact and free from obstruction.

Ensure the safety of the complete system before the Converter is energised:

- Ensure that rotation of the motor in either direction will not cause damage.
- Ensure that nobody else is working on another part of the system which will be affected by powering up.
- Ensure that other equipment will not be adversely affected by powering up.

Prepare to energise the Converter and system as follows:

- Remove the main external HRC fuses to prevent the main 3-phase and single phase auxiliary supply from being connected.
- Disconnect the load from the motor shaft, if possible.
- If any of the Converter's control terminals are not being used, check whether these unused terminals need to be tied high or low. Refer to Chapter 11: "Technical Specifications"- Control Terminals.
- If there is any doubt about the integrity of a particular installation, insert a high wattage resistor, i.e. fire elements, in series with the motor armature.
- Check external run contacts are open.
- Check external speed setpoints are all zero.

Setting-up the Converter

Note: *Refer to Chapter 5: "The Man-Machine Interface (MMI)" to familiarise yourself with the MMI's LED indications, and how to use the keys and menu structure.*

The following instructions are written in logical order. Complete each stage successfully before progressing to the next.

Calibration

NO POWER IS CONNECTED AT THIS STAGE

You must first calibrate the Converter for use with the motor:

The settings for Armature Current, Field Current, Armature Voltage and the Tacho Calibration Option Board (if fitted) are selected on the control board. Lift the hinged terminal cover to reveal the switchable calibration panel and the switchable tacho calibration option board (if fitted).

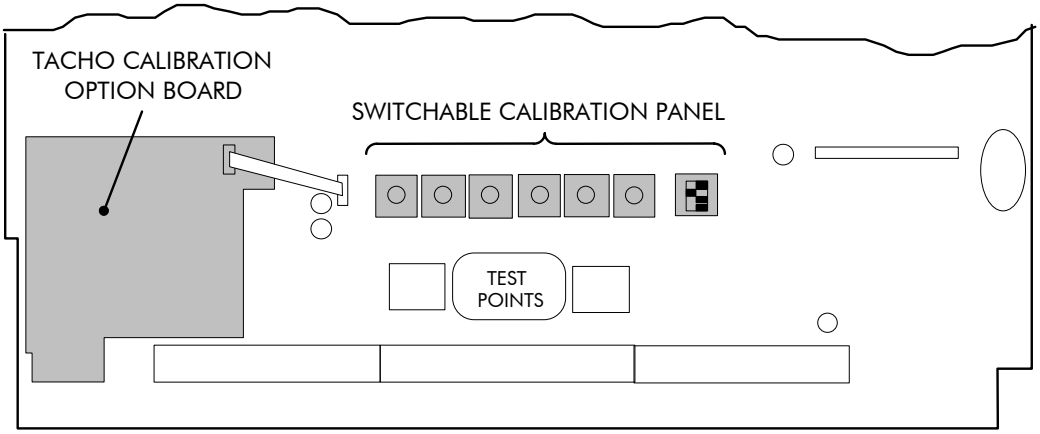

IMPORTANT: You must not exceed the maximum drive and motor ratings. Refer to the Product Code or maximum rating label, and the motor rating plate.

Switchable Calibration Panel

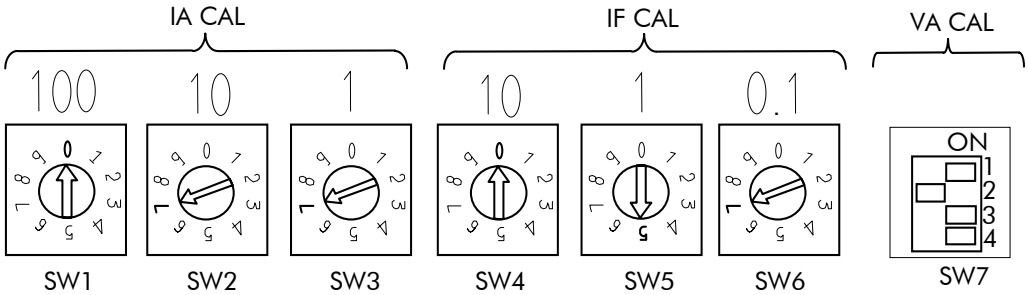

Armature Current (IA CAL)

Note the maximum armature current from the motor rating plate and set this value using SW1, SW2 and SW3. The switches set Amps in hundreds, tens and units. The illustration above shows an IA CAL setting of 77A.

Field Current (IF CAL)

Note the nominal field current from the motor rating plate and set this value using SW4, SW5 and SW6. The switches set Amps in tens, units and tenths. The illustration shows an IF CAL setting of 5.7A. The maximum current is 19.9A, setting a higher value than this results in 0A.

Note: *If using an external stack controller, set the switches for one quarter less current than you require, i.e. if you want 12A of field current, set the switches to 9A. (This allows for a different turns ratio used in the current transformers of external stack modules).*

Armature Voltage (VA CAL)

Set this using the 4-way switch, SW7. The switch sets voltage according to the table below.

VA	Armature Volts VA (Volts)															
Switch	150	175	200	225	250	275	300	325	350	375	400	425	450	475	500	525
1	1	0	1	0	1	0	1	0	1	0	1	0	1	0	1	0
2	1	1	0	0	1	1	0	0	1	1	0	0	1	1	0	0
3	1	1	1	1	0	0	0	0	1	1	1	1	0	0	0	0
4	1	1	1	1	1	1	1	1	0	0	0	0	0	0	0	0

A "1" indicates that the switch is ON.

The illustration on the previous page shows a VA CAL setting of 200V.

Note: *Calibration up to 700V is possible with external stacks. Refer to Parker SSD Drives.*

Analog Tacho Calibration Option Board

Note: *This option is not required if armature voltage or encoder feedback is to be used.*

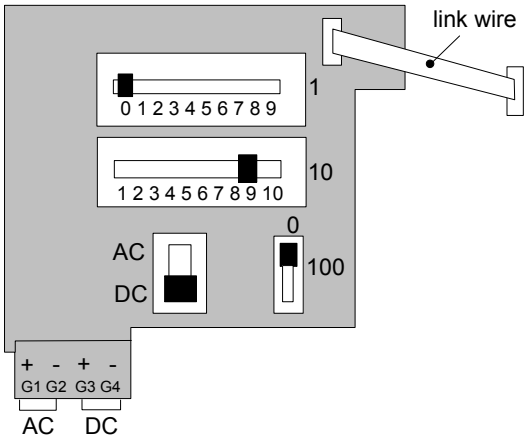

The board fits on to a 10-way connector. It also requires the connecting link wire to the control board. This link is inherent but must be connected for operation.

The board supports AC and DC analog tachos with a calibration range of 10 to 209V (see note):

- For AC tacho feedback, use terminals G1 and G2 with the selector switch in the AC position.
- For DC tacho feedback, use terminals G3 and G4 with the selector switch in the DC position

Calculate the tacho voltage by multiplying the required maximum speed by the tacho calibration factor, e.g. motor speed 1500 rpm and tacho calibration factor 60V per 1000 rpm is 90V.

The tacho calibration volts are set using the 2 in-line switches (10-way). The switches set Volts in units and tens. The hundreds are set by the 1-way switch. The illustration above shows a setting of 90V.

Note: *Do not set the calibration volts to greater than 200V, the maximum terminal block rating.*

Calibration for Voltages greater than 200V

For full speed tacho voltages greater than 200V, an external resistor, value RE, is required in series with the tachogenerator connection to terminal G3.

Set the switches on the Tacho Calibration Option Board to give a value of 200V, as shown opposite.

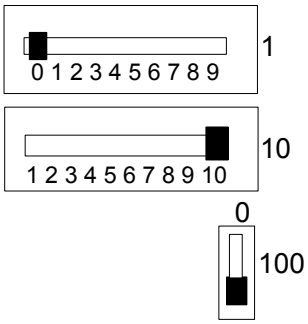

RE then is given by the formula:

$$RE = \frac{(\text{tachovolts} - 200)}{5}\ k\Omega$$

The power dissipation of this resistor is given by the formula

W = (tacho volts - 200) x 5 milliwatts

Microtach/Encoder Feedback Option Board

The option board assumes a 1000 lines per rev encoder is being used. Speed is set directly by the ENCODER RPM parameter. If you are using an alternative lines per rev encoder, you must set the ENCODER LINES parameter on the MMI later in the Operating Instructions.

Selecting Speed Feedback

AUXILIARY POWER ONLY IS CONNECTED AT THIS STAGE

Connect the auxiliary power supply to power terminals D7 and D8 (but do not connect the main 3-phase power supply at this stage). Check that the correct voltage appears between terminals D7 and D8.

The MMI will now display the Welcome screen, and the Health and Overcurrent Trip MMI LEDs will be illuminated (assuming that the Converter's control terminals are wired as shown in Figure 3-4, Minimum Connection Requirements).

Use a digital voltmeter to check for the following:

+24V rail at terminal C9, +10V rail at terminal B3, -10V rail at terminal B4

Using the MMI, select the correct speed feedback option. The default is ARM VOLTS FBK. (Note that this is the last selection in the list, use the ↑ (UP) key to reveal other selections).

The selections are ARM VOLTS FBK, ANALOG TACH, ENCODER and ENCODER/ANALOG.

MMI Menu Map

1 SETUP PARAMETERS

2 SPEED LOOP

SPEED FBK SELECT

Note: *Refer to Chapter 13: "Standard and Optional Equipment" - Speed Feedback Option Boards for further information.*

Initial Start-up Routine

Complete steps 1 to 18, including steps 16 and 17 as appropriate.

Note: *This routine assumes that the Converter's control terminals are wired as shown in Figure 5-12, Minimum Connection Requirements. The field is "Enabled" and is in Voltage Control (default settings).*

IMPORTANT: Do not change any of the previously made calibration settings once the main contactor is energised.

---

1 Normally, the setpoint ramp input at control terminal A4 is the speed reference source.

Use the MMI to display the value of the ANIN 3 (A4). Vary the setpoint potentiometer and observe the input voltage display change.

Additional Setpoint Inputs may also appear at ANIN 1 (A2) and ANIN 2 (A3). Check these if present.

MMI Menu Map
1 DIAGNOSTICS
- ANIN 1 (A2)
- ANIN 2 (A3)
- ANIN 3 (A4)

The sum of all the setpoints is given by the value of the SPEED SETPOINT parameter, and is also output at terminal A8.

MMI Menu Map
1 DIAGNOSTICS
- SPEED SETPOINT

---

2 Use the MMI to check the external current clamp settings (refer to Chapter 6: "Programming Your Application" - ANIN for setting details):

- *If using a single external clamp, C6 low (0V):*

  Check that ANIN 5 (A6) is +10V or is adjustable up to +10V.

- *If using dual external clamps, C6 high (+24V):*

  Check the ANIN 5 (A6) is at +10V or is adjustable up to +10V and that ANIN 4 (A5) is at -10V or is adjustable up to -10V.

MMI Menu Map
1 DIAGNOSTICS
- ANIN 4 (A5)
- ANIN 5 (A6)

---

3 If possible, check the speed feedback by rotating the shaft manually in the forward direction.

- *Analog Tachogenerator:*

  The voltage at G3 (DC Tach Input) should go positive.

- *MICROTACH/Encoder*

  The ENCODER parameter should give a positive reading.

MMI Menu Map
1 DIAGNOSTICS
- TACH INPUT (B2)

MMI Menu Map
1 DIAGNOSTICS
- ENCODER

Also check the SPEED FEEDBACK parameter is reading a positive value. If there is no feedback signal from the Microtach, verify that all 3 LEDs on the Microtach Option Board are illuminated. If one or more of these LED's are extinguished, check that 24V is applied to the Microtach and all ancillary products, and that the fibre optic transmission length is not exceeded.

MMI Menu Map
1 DIAGNOSTICS
- SPEED FEEDBACK

---

4 Scroll through the SETUP PARAMETERS menu and take a note of the MAIN CURR. LIMIT parameter's value. You will need this later.

Set the MAIN CURR. LIMIT parameter to 0.00%.

Select the correct setting for the SPEED FBK SELECT.

Note: *Save any parameters that have been changed. Refer to Chapter 5: "The Man-Machine Interface (MMI)" - How to Save, Restore and Copy your Settings.*

MMI Menu Map
1 SETUP PARAMETERS
2 CURRENT LOOP
- MAIN CURR. LIMIT

MMI Menu Map
1 SETUP PARAMETERS
2 SPEED LOOP
- SPEED FBK SELECT

5 With the Program Stop and Coast Stop LEDs illuminated:

- *Apply the "Start/Run" command to C3.*

  The main 3-phase contactor should pull-in and remain energised, (it may de-energise almost immediately due to the 3-phase fail alarm).

- *Remove the "Start/Run" command from C3.*

  The main 3-phase contactor should drop-out and remain de-energised.

If the above sequence does not function, remove the auxiliary power and check start/stop sequencing and contactor wiring.

If the contactor is left energised for an extended time during this check, the controller will detect that 3-phase is not connected and switch off the contactor, flagging the 3-phase alarm.

The main contactor should never be operated by any means other than the drive internal controls, nor should any additional circuitry be placed around the contactor coil circuit.

WARNING!
Only continue with the set-up instructions if the stop/start circuits and contactor operate correctly.

6 Switch off all power supplies to the equipment and, when the whole system is totally isolated and safe, re-connect the main 3-phase power supply.

- Switch on the auxiliary supply.
- Switch on the main 3-phase supply.

MAIN & AUXILIARY POWER ARE CONNECTED AT THIS STAGE

7 Set the Speed Setpoints to zero so that the value of the SPEED SETPOINT parameter is zero, this is also output at Terminal A8.

MMI Menu Map

1 DIAGNOSTICS
└ SPEED SETPOINT

8 Verify that the MAIN CURR. LIMIT is set to 0.00%, or that the ANIN 5 (A6) parameter in the DIAGNOSTICS menu at level 1 is displaying 0.00V.

MMI Menu Map

1 SETUP PARAMETERS
2 CURRENT LOOP
└ MAIN CURR.LIMIT

MMI Menu Map

1 DIAGNOSTICS
└ ANIN 5 (A6)

9 Apply the Start/Run command and check that 3-phase mains is applied to Power Terminals L1, L2 and L3. Initiate "Enable" (C5) and immediately check that the correct field voltage appears between Terminals D4 and D3.

This is high voltage DC, proceed with caution. Do not continue if this is incorrect, switch off all supplies and check connections. Refer to 9.1 or 9.2 on the next page:

If the field voltage is not correct, make the following checks:

9.1 *Internally Supplied Field:*

- Check that 3-phase is applied to terminals L1, L2 and L3 when the main contactor is closed.
- Check that the 3 coding fuses on the power board are healthy.
- The FIELD ENABLE parameter should be set to ENABLE.

MMI Menu Map
1 SETUP PARAMETERS
2 FIELD CONTROL
FIELD ENABLE

- With the FIELD ENABLE parameter in view, press the ↓ (DOWN) key. The display changes to FLD CTRL MODE IS. Press the **M** key. Is this set to VOLTAGE CONTROL or CURRENT CONTROL?
  - ■ If set to VOLTAGE CONTROL, check the value of the RATIO OUT/IN parameter. This should be set to 90% maximum.
  - ■ If set to CURRENT CONTROL, check the field current calibration set-up, refer back to "Calibration".

MMI Menu Map
1 SETUP PARAMETERS
2 FIELD CONTROL
3 FLD VOLTAGE VARS
RATIO OUT/IN

If the field volts are at maximum, check the field continuity. (The field current may initially be lower than the rated value due to a cold field.)

9.2 *Externally Supplied Field:*

- Check the voltage applied (externally fused) to terminals D1 and D2.
- Check the phasing of voltage applied to D1 and D2:

  D1 must be connected directly or indirectly to the Red phase on main power terminal L1.

  D2 must be connected directly or indirectly to the Yellow phase on main power terminal L2.

MMI Menu Map
1 SETUP PARAMETERS
2 FIELD CONTROL
FIELD ENABLE

- The FIELD ENABLE should be set to ENABLE.
- With the FIELD ENABLE parameter in view, press the ↓ (DOWN) key. The display changes to FLD CTRL MODE IS. Press the **M** key. Is this set to VOLTAGE CONTROL or CURRENT CONTROL?
  - ■ If set to VOLTAGE CONTROL, check the value of the RATIO OUT/IN parameter. This should be set to 90% maximum.
  - ■ If set to CURRENT CONTROL, check the field current calibration set-up, refer back to "Calibration".

MMI Menu Map
1 SETUP PARAMETERS
2 FIELD CONTROL
3 FLD VOLTAGE VARS
RATIO OUT/IN

Check that 3-phase is applied to terminals L1, L2 and L3.

---

10 Check that all six MMI LEDs are now illuminated. Note that any external interlocks which affect the Enable input C5 will affect the state of the RUN LED.

---

11 If the STANDSTILL LOGIC parameter in the STANDSTILL menu at level 2 is ENABLED, temporarily set it to DISABLED.

MMI Menu Map
1 SETUP PARAMETERS
2 STANDSTILL
STANDSTILL LOGIC

Caution
During the following set-up instructions, be ready to STOP the converter should the motor try to overspeed.

12 Set the Speed Setpoints so that the value of the SPEED SETPOINT is about 5%, 0.5V at setpoint input (terminal A8).

MMI Menu Map
1 DIAGNOSTICS
SPEED SETPOINT

Perform the next operation with ARM VOLTS FBK selected for the SPEED FBK SELECT parameter (because it is hard-wired and therefore the sign will be correct). Select it now.

MMI Menu Map
1 SETUP PARAMETERS
2 SPEED LOOP
SPEED FBK SELECT

Slowly increase the MAIN CURR.LIMIT parameter up to a maximum of about 20%. The motor should begin to rotate if all connections are made correctly. The motor speed will settle at about 5% of full speed if the motor is unloaded. Check the feedback from the Tacho or Encoder using the appropriate Diagnostic menu.

Now stop the drive. Re-instate your selection for the SPEED FBK SELECT parameter (if other than ARM VOLTS FBK) and perform the same test again.

If the test was successful perform a PARAMETER SAVE and go to 14. If just direction of rotation is wrong go to 13, otherwise check as below.

MMI Menu Map
1 SETUP PARAMETERS
2 CURRENT LOOP
MAIN CURR.LIMIT

If 5% speed (approx.) is exceeded and the motor continues to accelerate a reversed connection is implied, decrease the MAIN CURR.LIMIT parameter to zero.

12.1 *Reversed Connections - Analog Tachogenerator:*
Open the main contactor and switch off all supplies, then correct the connections.

- If the motor is turning in the correct direction, reverse the tachogenerator connections only.
- If the motor is turning in the wrong direction, reverse the field connections only.

12.2 *Reversed Connections - MICROTACH/Encoder:*
Open the main contactor.

MMI Menu Map
1 SETUP PARAMETERS
2 SPEED LOOP
ENCODER SIGN

- If the motor is turning in the right direction, change over the ENCODER SIGN parameter.
- If the motor is turning in the wrong direction, switch off all supplies then reverse the field connections only.

Re-connect the supplies if disconnected and repeat the test from the beginning.

If the motor still runs out of control, check the tachogenerator and the wiring continuity. In the case of the MICROTACH there are three LED's on the MICROTACH option board, all these LED's should be ON indicating healthy operation of the wiring and tacho. If in doubt about the operation of the tachogenerator either Analog or MICROTACH during this test, monitor terminal A7 with respect to signal ground on a meter. This will show if a feedback is present.

Note: *If the drive trips on speed feedback alarm with tachogenerator feedback of the correct polarity, check the armature voltage calibration.*

MMI Menu Map
1 SETUP PARAMETERS
2 SPEED LOOP
SPEED FBK SELECT

Check the SPEED FBK SELECT. This could be set incorrectly allowing the drive to run open loop.

If the motor does not turn at all when the MAIN CURR.LIMIT is increased to 20%, check the CURRENT FEEDBACK parameter to verify that current is flowing into the armature. If no current is flowing, switch off and check the armature connections.

MMI Menu Map
1 DIAGNOSTICS
CURRENT FEEDBACK

Is the motor connected to the converter?

- Verify that calibration has been carried out correctly.

WARNING!
Only continue with the set-up instructions if this test is completed satisfactorily.

13 If the drive has run satisfactorily without any need for reconnection of the field or tachogenerator but the direction of rotation is wrong, open the main contactor and disconnect all supplies.

13.1 *Analog Tachogenerator:*

Reverse both field and tachogenerator connections.

13.2 *MICROTACH/Encoder:*

Reverse the field, re-establish the auxiliary supply and reverse the ENCODER SIGN parameter.

MMI Menu Map
1 SETUP PARAMETERS
2 SPEED LOOP
ENCODER SIGN

IMPORTANT: When satisfactory operation has been achieved, perform a PARAMETER SAVE. Refer to Chapter 5: "The Man-Machine Interface (MMI)" - Saving Your Application.

14 With the MAIN CURR.LIMIT parameter set to 20% or the level required to achieve rotation, set the Speed Setpoints so that the value of the SPEED SETPOINT is about 10%, 1.0V at setpoint input (Terminal A8). The motor will accelerate to this speed setting.

14.1 *4 Quadrant Drives which require reverse rotation:*
Alter the Speed Setpoints so that the value of the SPEED SETPOINT parameter is about -10% and check that motor runs in the reverse direction.

MMI Menu Map
1 DIAGNOSTICS
SPEED SETPOINT

14.2 *Adjustment of ZERO SPEED OFFSET parameter:*

■ *4 Quadrant, non-reversing drives*
Set the Speed Setpoint potentiometer to zero and adjust the ZERO SPEED OFFSET parameter for minimum shaft rotation.

MMI Menu Map
1 SETUP PARAMETERS
2 CALIBRATION
ZERO SPD.OFFSET

■ *2 Quadrant, non-reversing drives*
Set the Speed Setpoint potentiometer to zero and adjust the ZERO SPEED OFFSET parameter until the shaft is just rotating then reduce level until the shaft stops.

■ *4 Quadrant, reversing drives*
Set the ZERO SPEED OFFSET parameter to balance maximum speed in forward and reverse directions.

MMI Menu Map
1 SETUP PARAMETERS
2 STANDSTILL
STANDSTILL LOGIC

You can also set the STANDSTILL LOGIC parameter to ENABLE if a stationary shaft is required.

15 Gradually increase the Speed Setpoints so that the value of the SPEED SETPOINT (DIAGNOSTIC menu) is at maximum. Check the shaft speed is correct.

MMI Menu Map
1 SETUP PARAMETERS
2 CALIBRATION
ARMATURE V CAL.
ANALOG TACH CAL.
ENCODER RPM

If fine adjustment is required adjust the calibration as appropriate to the speed feedback selection:

- Armature Voltage feedback has a +2/-10% trim, greater changes outside this range require re-setting of the calibration switches.
- Analog Tachogenerator has a +2/-10% trim, greater changes outside this range require re-setting of the calibration switches.
- The MICROTACH/Encoder should give an absolute rotational speed for which adjustment is unnecessary however the motor speed may not be the relevant factor thus speed of rotation can be altered by simply adjusting the calibration.

16 Adjustment for field weakening:

If the drive is to be run with a top speed greater than the base speed (usually 1500 rpm) then `field weakening' is used to achieve that top speed. (Refer to Chapter 9: "Control Loops" - Field Control for a more detailed explanation.

Note: *Note that the drive must be operating in Field Current Control. Select CURRENT CONTROL on the FLD CTRL MODE IS parameter. Also, field weakening cannot be used if you have Armature Voltage feedback selected.*

MMI Menu Map
1 SETUP PARAMETERS
2 FIELD CONTROL
FLD CTRL MODE IS

Run the drive up to base speed and check the motor volts are correct.

In the FLD WEAK VARS menu, verify that field weakening is selected (FIELD WEAK ENABLE) and that the MIN FLD CURRENT parameter is set appropriately. Adjust the maximum armature volts to the required scaled level by setting the MAX VOLTS parameter.

MMI Menu Map
1 SETUP PARAMETERS
2 FIELD CONTROL
3 FLD CURRENT VARS
4 FLD WEAK VARS
FLD. WEAK ENABLE
MIN FLD CURRENT
MAX VOLTS

Increase the speed above the base speed, checking that the armature volts remain constant whilst the field current reduces.

Gradually increase to maximum speed. Monitor the armature volts at maximum speed and trim the speed using the appropriate control as detailed in Step 15. *PROCEED WITH CARE - MAKE SMALL ADJUSTMENTS.*

Trim the MIN FLD CURRENT parameter to the appropriate setting (5% lower than the field current at full speed).

17 Adjustment for reversing drives:

For reversing drives, check the maximum reverse speed.

Imbalance in reversing drives can only be corrected by adjusting the ZERO SPD OFFSET parameter, which may be to the detriment of operation at Zero Setpoint.

MMI Menu Map
1 SETUP PARAMETERS
2 CALIBRATION
ZERO SPD.OFFSET

18 Re-set the MAIN CURR. LIMIT parameter to the original setting that you previously noted. If in doubt, set it to 100% to correspond to 100% full load current (FLC).

Note: *The controller cannot achieve 200% current unless the CUR LIMIT/SCALER parameter is increased to 200% (from its default setting of 100%). Until this is done, the External Current Clamp will limit the current to 100%, refer to Chapter 6: "Programming Your Application" - CURRENT LOOP.*

MMI Menu Map
1 SETUP PARAMETERS
2 CURRENT LOOP
MAIN CURR.LIMIT

- If the current limit is set higher (maximum 200%) and the motor runs into an overload condition, the current is automatically reduced from the current limit level down to 110% FLC (continual rating).
- If the motor is overloaded, the controller will reduce the current to 110% of the current calibration. (If the motor continues to rotate it may overheat and thermal protection should be provided).
- If the motor is overloaded and the current provided by the controller is not enough to maintain rotation, i.e. it stalls, the controller will trip out showing STALL TRIP alarm, if enabled.

Performance Adjustment

Current Loop - The Autotune Feature

Now perform an Autotune to identify and store the following Current Loop parameters:

PROP. GAIN
INT. GAIN
DISCONTINUOUS

Initial Conditions

1. Main contactor open, i.e. no Start/Run signal at terminal C3.
2. Set the AUTOTUNE parameter to OFF.
3. Program Stop (terminal B8) and Coast Stop (terminal B9) should be high, i.e. 24V.
4. If the field is being supplied by a third-party controller, remove the field manually. (If the field is internally regulated, Autotune automatically quenches the field).

IMPORTANT: The shaft may require clamping for certain motors to prevent rotation >20% during the Autotune sequence. If the motor is either a compound motor (series field), has some residual magnetism, or is a permanent magnet motor it WILL rotate and the shaft must be clamped. If in any doubt, CLAMP OR BE READY TO STOP THE MOTOR."

Performing an Autotune

MMI Menu Map

1 SETUP PARAMETERS
2 CURRENT LOOP
AUTOTUNE

- Set the AUTOTUNE parameter to ON.
- Close the main contactor, i.e. Start/Run signal to terminal C3.
- Energise the Enable terminal (C5).

The Autotune sequence is initiated. When complete (after approximately 10 seconds), the main contactor is opened automatically signalling the end of the sequence and the AUTOTUNE parameter is reset to OFF.

- **Perform a PARAMETER SAVE now**. Refer to Chapter 5: "The Man-Machine Interface (MMI) - Saving Your Application.
- If necessary, restore field connections and remove the mechanical clamp.

Autotune Failed?

- The MMI displays the message AUTOTUNE ABORTED
  If any one of the Initial Conditions above are removed, or the Autotune sequence times out (after 2 minutes), then the Autotune sequence is aborted causing the main contactor to drop out.
- The MMI displays the message AUTOTUNE ERROR
  If during the Autotune sequence the motor speed feedback is greater than 20% of rated speed, or the field current is detected above 6% of rated field current, then the Autotune sequence is suspended causing the main contactor to drop out.

Note: *Refer to Chapter 9: "Control Loops" - Current Control for manual tuning instructions.*

Speed Loop

You will need to adjust the Speed Loop for your particular application although in most cases the default settings are acceptable.

The optimum Speed Loop performance is achieved by adjusting the PROP. GAIN and INT. TIME CONST. parameters.

Produce a small step-change to the speed setpoint and observe the response on the tachogenerator feedback. If the Converter is using Microtach/Encoder feedback, then the speed response can be monitored on Terminal A7.

Adjust the two parameters until you have rapid change of speed feedback between the setpoint values, but with minimum overshoot.

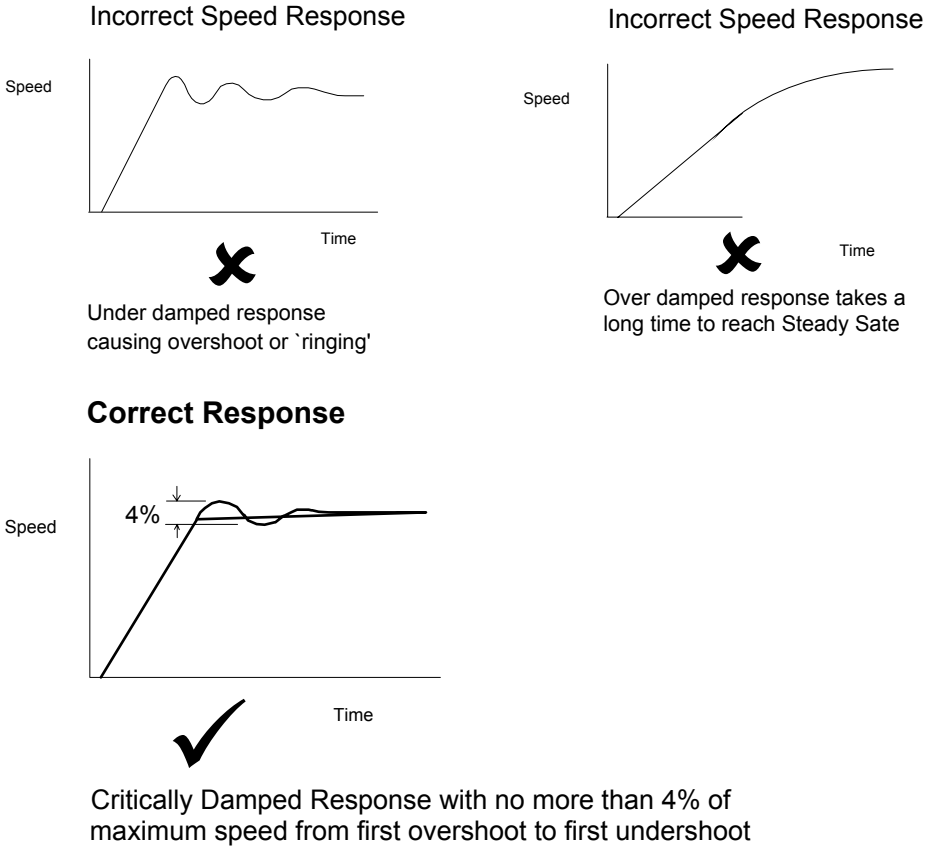

Starting and Stopping Methods

Stopping Methods

Note:

- If the Converter is “non-regenerative” (2-quad - 591, 599) it effectively coasts to a stop once the current demand reverses.
- If the Converter is “regenerative” (4-quad - 590, 598) then it can stop faster because it uses energy from the load, i.e. reverse current is allowed to flow.

Normal Stop and Program Stop are only relevant for a “regenerative” controller.

The parameters STOP TIME and PROG STOP TIME have associated timers which initiate a Coast Stop after the timed period.

The Coast Stop has direct control of the Run relay with no intervening electronics.

All associated parameters can be found in the STOP RATES menu.

MMI Menu Map

1 SETUP PARAMETERS

2 STOP RATES

Terminal	Description	Function	Parameter	Priority
B9	Coast Stop	Motor coasts to rest	--	Overrides Program Stop and Normal Stop
B8	Program Stop	Motor decelerates at Program Stop rate	STOP TIME	Overrides Normal Stop
C3	Start/Run (Normal Stop)	Motor decelerates at Normal Stop rate	PROG STOP TIME	--

Normal Stop (C3)

This is achieved by removing 24V from Terminal C3.

The motor speed is brought to zero in a time defined by the STOP TIME parameter.

MMI Menu Map

1 SETUP PARAMETERS
2 STOP RATES
STOP TIME

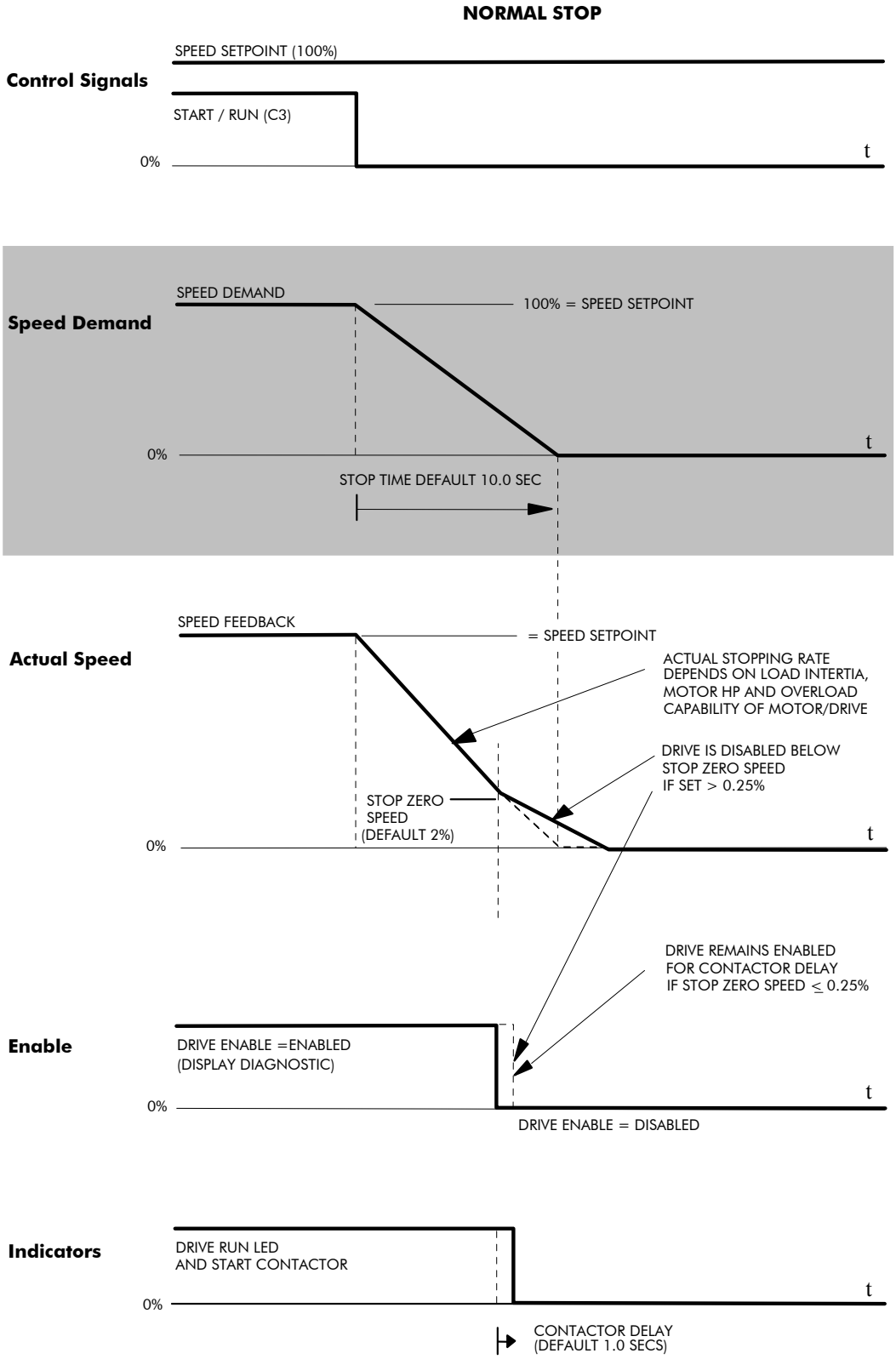

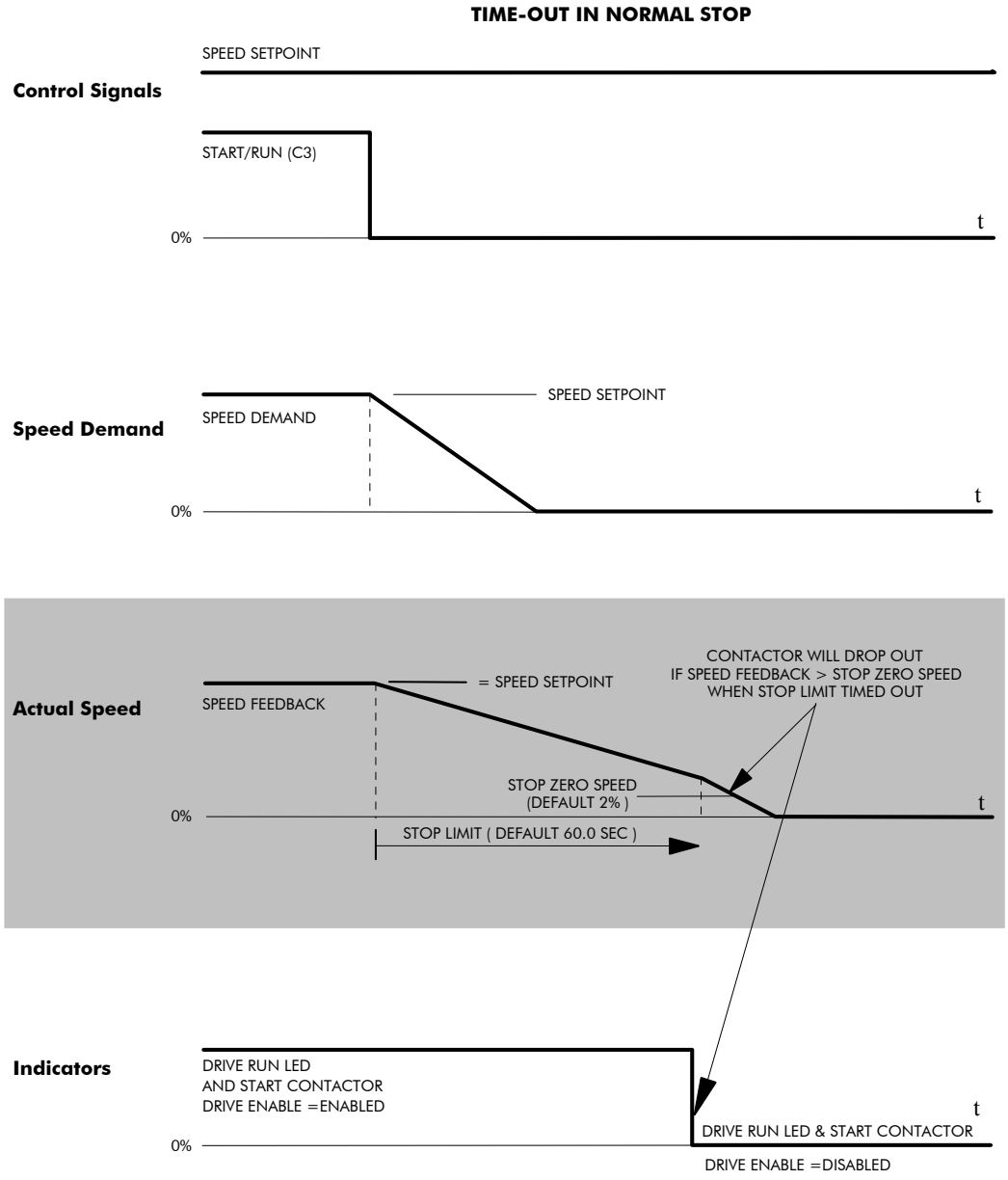
TIME-OUT IN NORMAL STOP
SPEED SETPOINT
Control Signals
START/RUN (C3)
0%
t
SPEED SETPOINT
Speed Demand
SPEED DEMAND
0%
t
CONTACTOR WILL DROP OUT
IF SPEED FEEDBACK > STOP ZERO SPEED
WHEN STOP LIMIT TIMED OUT
= SPEED SETPOINT
Actual Speed
SPEED FEEDBACK
STOP ZERO SPEED
(DEFAULT 2%)
0%
t
STOP LIMIT (DEFAULT 60.0 SEC)
Indicators
DRIVE RUN LED
AND START CONTACTOR
DRIVE ENABLE =ENABLED
t
DRIVE RUN LED & START CONTACTOR
0%
DRIVE ENABLE =DISABLED

Program Stop (B8)

This is achieved by removing 24V from Terminal B8.

The motor speed is brought to zero under conditions defined by the PROG. STOP TIME (ramp rate) and PROG. STOP I LIMIT parameters.

MMI Menu Map

1 SETUP PARAMETERS
2 STOP RATES
- PROG. STOP TIME
- PROG. STOP I LIMIT

PROGRAM STOP TIMING

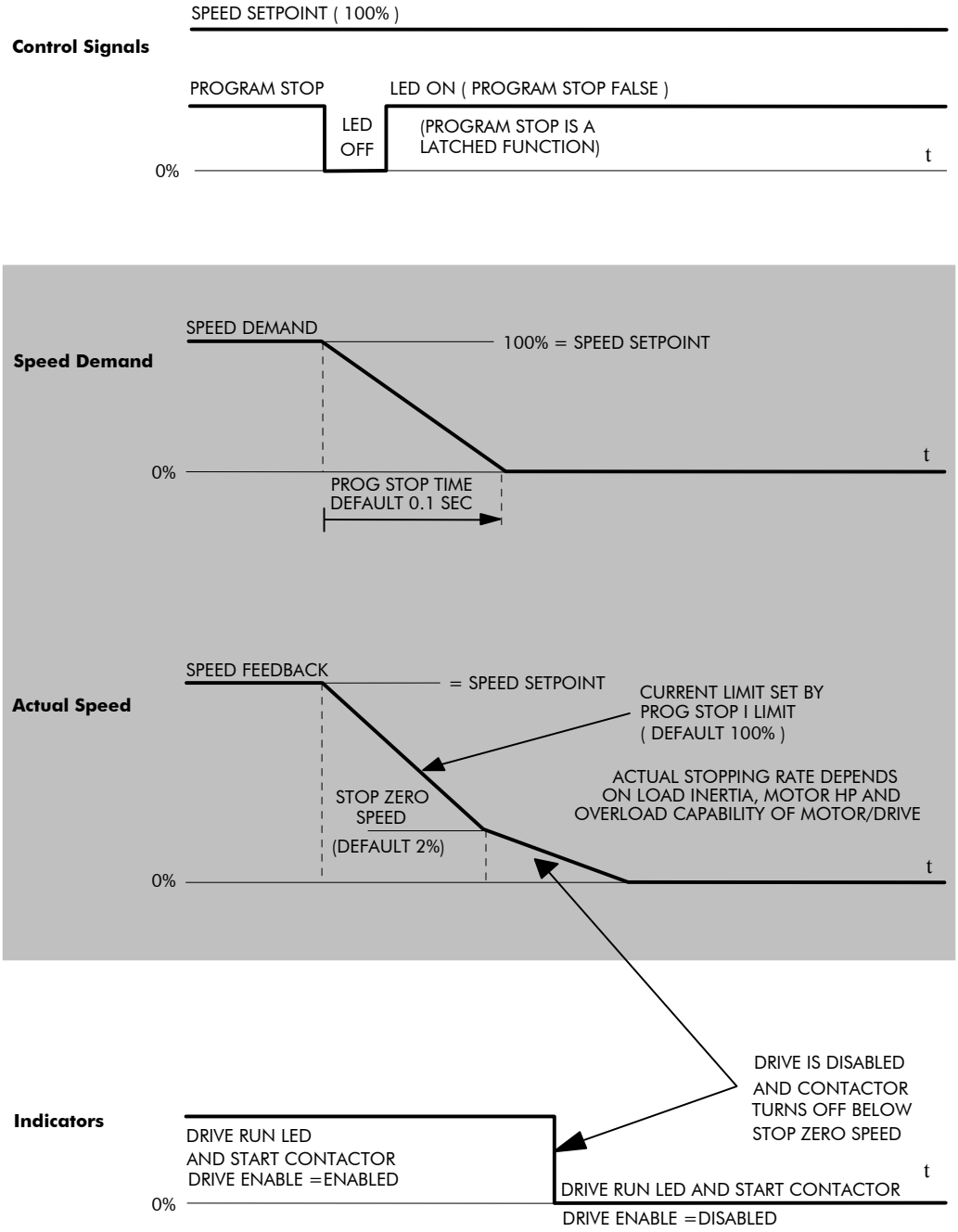

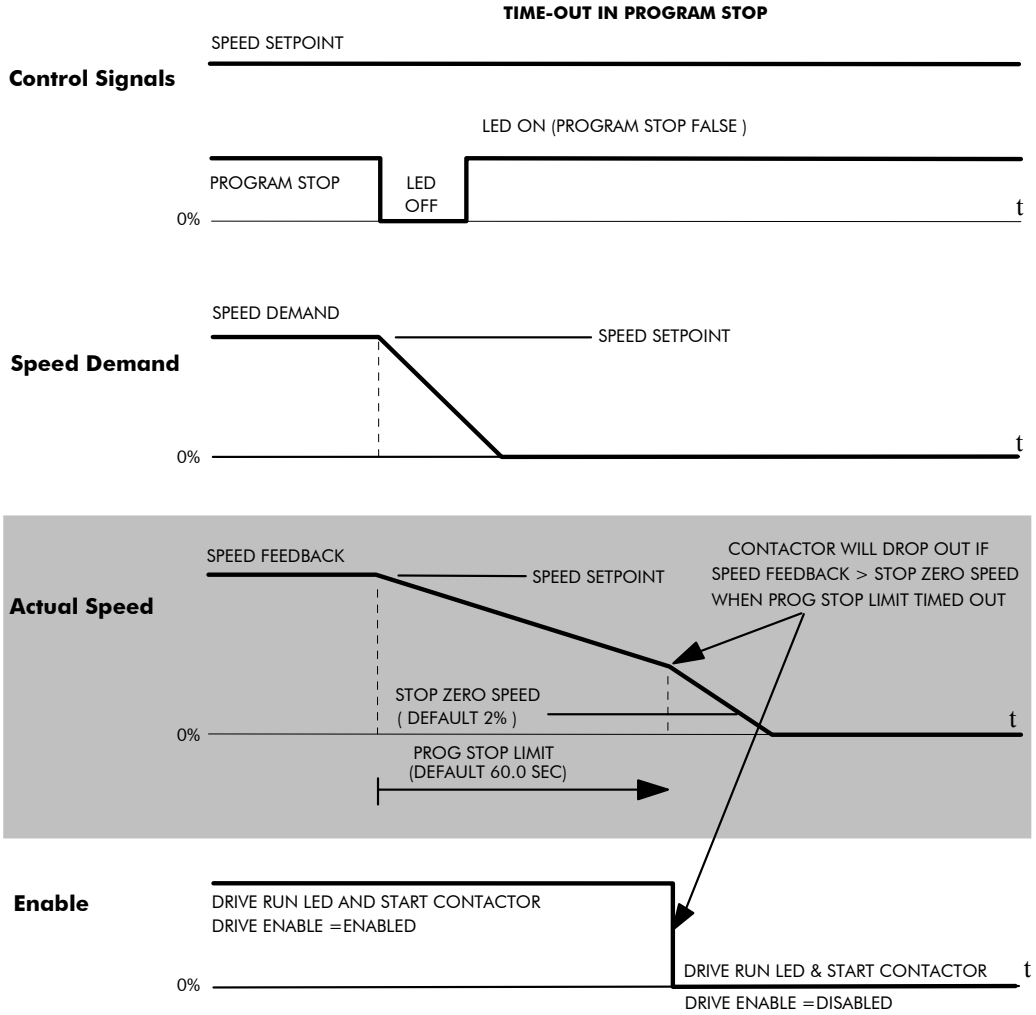

Coast Stop (B9)

This is achieved by removing 24V from Terminal B9.

The stack is automatically quenched and the contactor is opened. The motor coasts to a stop.

Note: *The motor coast stop rate is dictated by the motor inertia - the drive does not control the motion.*

Standstill

Refer to Chapter 6: “Programming Your Application” - STANDSTILL.

MMI Menu Map

1 SETUP PARAMETERS

2 STANDSTILL

- STANDSTILL LOGIC
- ZERO THRESHOLD

The Trip Condition

When a trip condition is detected, a similar stopping method to Coast Stop is used. The power stack cannot be re-enabled until the trip condition has been cleared and successfully reset. Refer to Chapter 7: “Trips and Fault Finding” for further details.

Normal Starting Method

To achieve a normal start of the Converter:

1. Apply 24V to Terminal C5 (Enable)
2. Apply 24V to Terminal C3 (Start)

Note: *The Converter will not start if there are alarms present, or if Terminals B8 (Program Stop) or B9 (Coast Stop) are low, 0V.*

Ensure that Program Stop and Coast Stop are valid before Start/Run is applied.

Advanced Starting Methods

Starting Several Converters Simultaneously

1. Apply 24V to Terminal C3 (Start)
2. Use Terminal C5 (Enable) to synchronise the start-up of the Converters

Jog

1. Apply 24V to Terminal C5 (Enable)
2. Apply 24V to Terminal C4 (Jog Mode)

Note: *The Converter will not start if there are alarms present.*

The Converter can be started using JOG SPEED 1, JOG SPEED 2 (allowing for two different setpoints, or perhaps to provide an Inch Forward/Inch Reverse).

Refer to Chapter 6: “Programming Your Application” - JOG/SLACK for further information. Also refer to the STOP RATES function block: the CONTACTOR DELAY parameter is used to prevent multiple operations of the main contactor from rapid use of the Jog switch.

Crawl

1. Apply 24V to Terminal C3 (Start)
2. Apply 24V to Terminal C4 (Jog Mode)

Note: *The Converter will not start if there are alarms present.*

Start the Converter using a crawl speed, in Forward or Reverse.

Refer to Chapter 6: “Programming Your Application” - JOG/SLACK for further information.

THE MAN-MACHINE INTERFACE (MMI)

Introducing the MMI

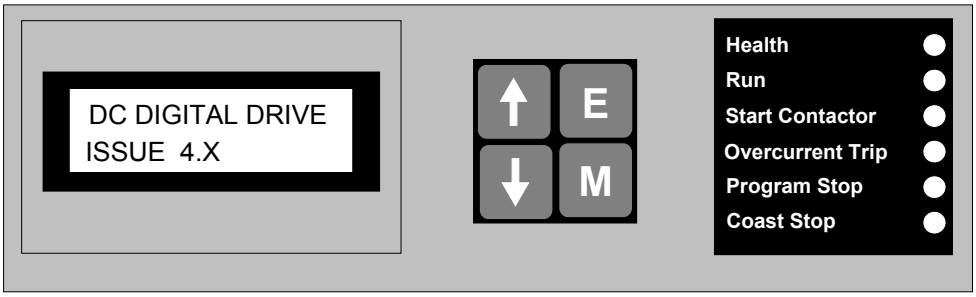

The Man-Machine Interface (MMI) consists of a liquid crystal display, control keys and LEDs that allow full use of the Converter's features. The Liquid crystal display can be seen through the hinged cover that protects the MMI. Lower the protective cover to see the control keys.

The MMI provides for application programming and monitoring of the Converter for remote control.

Welcome Screen

On power-up, a self-test is displayed. This is quickly replaced by a default Welcome screen showing the product description and software version of the Converter. The display then changes to MENU LEVEL after a further 15 seconds (you can press the **M** key to display this screen immediately). This screen is at the top of the MMI's menu system.

Using the MMI

Control Keys

Keys for Programming the Converter

Note: *See " Navigating the Menu System", page 5-3 for a quick-start to using the menu.*

UP Δ	*Navigation* - Moves upwards through the list of parameters. *Parameter* - Increments the value of the displayed parameter. *Command Acknowledge* - Confirms action when in a command menu.
DOWN ∇	*Navigation* - Moves downwards through the list of parameters. *Parameter* - Decrements the value of the displayed parameter.
ESCAPE E	*Navigation* - Displays the previous level's Menu. *Parameter* - Returns to the parameter list. *Trip Acknowledge* - Acknowledges displayed Trip or Error message.
MENU M	*Navigation* - Displays the next Menu level, or the first parameter of the current Menu. *Parameter* - Allows a writable parameter to be modified

LED Indications

There are six LEDs that indicate the status of the Converter. Each LED is considered to operate in two different ways:

○ OFF

● ON

The LEDs are labelled HEALTH, RUN, START CONTACTOR, PROGRAM STOP, OVER CURRENT TRIP, and COAST STOP. The status of the LEDs have the following meanings:

HEALTH	Converter State
○	Drive fault condition
●	Drive normal condition
RUN	**Converter State**
○	Drive not enabled: • the thyristor bridge is disabled • the main contactor control relay is de-energised • an alarm is present
●	Drive in run condition Drive is healthy (as indicated by the HEALTH LED) Ready (which requires a Start instruction) and enabled; indicates that the controller is in a normal run condition. The main contactor control relay is energised and the thyristor bridge is enabled.
START CONTACTOR	**Converter State**
○	Start contactor is Open
●	Start contactor is Closed (by a start instruction). The drive is healthy
PROGRAM STOP	**Converter State**
○	The program stop line is open and the program stop is carried out until main contactor drop-out occurs
●	No program stop (+24V is applied to terminal B8)
OVER CURRENT TRIP	**Converter State**
○	Armature current exceeded 280% full load. The drive has tripped, refer to Chapter 7: "Trips and Fault Finding" - Trip Messages (OVER I TRIP)
●	Armature current normal
COAST STOP	**Converter State**
○	Hardware stop by main contactor drop-out
●	Stop not active (+24V is applied to terminal B8)

In normal run condition, all LEDs on the MMI are illuminated. Any LED which is off indicates a condition which prevents operation of the controller.

HINT:
The general rule for LED indications is
"ON IS GOOD, OFF IS BAD"

The Menu System

The menu system is divided into a `tree' structure with 8 "MENU LEVEL" main menus. Consider these main menus to be at Menu Level 1 (refer to the Menu System Map on the next page). Parameters contained in Menu Level 1 are the most frequently used, as you descend the menu levels the parameters are less frequently used.

The Operator Station has selectable "viewing levels" which can restrict the view of the menu system, refer to " Menu Viewing Levels", page 5-5.

Below is a simple description of the main menus:

- **DIAGNOSTICS**: a view of important diagnostic parameters contained in the FUNCTION BLOCKS menu.
- **SETUP PARAMETERS**: contains all the function block parameters for programming your application, including parameters for tuning the Converter.
- **PASSWORD**: contains all the Password parameters required for security.
- **ALARM STATUS**: a view of the alarm diagnostic parameters contained in the FUNCTION BLOCKS menu.
- **MENUS**: allows full or reduced menu displays on the Operator Station.
- **PARAMETER SAVE**: Save the application/parameters.
- **SERIAL LINKS**: contains all the parameters for external communications set-up and operation.
- **SYSTEM**: contains all the parameters for I/O configuration. Also contains the Reserved Menu.

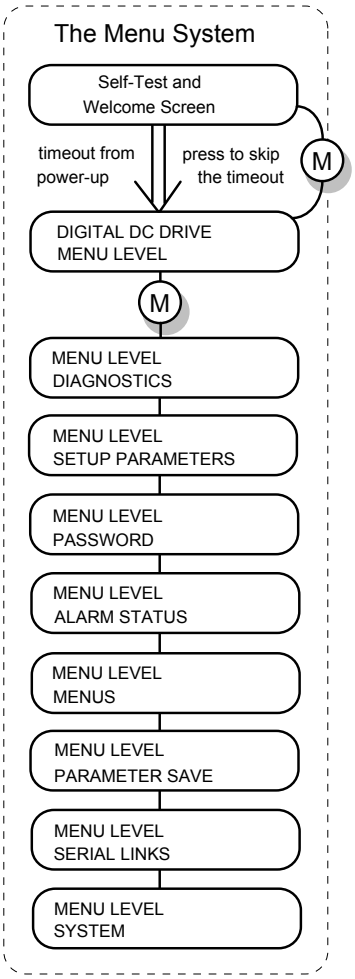

Figure 5-1 The Menu System showing Main Menus

Navigating the Menu System

On power-up, the MMI defaults into the Welcome screen.
Press the **M** key to skip the timeout and move immediately to the top of the menu system. Press the **M** key again to display the first menu level.

The menu system can be thought of as map which is navigated using the four keys shown opposite.

*Keys **E** and **M** navigate through the menu levels. The up (↑) and down (↓) keys scroll through the Menu and Parameter lists.*

The keys will repeat if you hold them down. This is an easy way to step through and view a menu's contents.

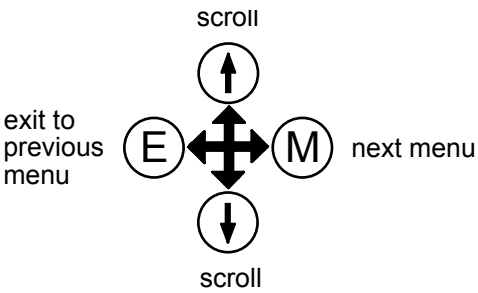

NAVIGATING THE MENU

Refer to "The Menu System Map" to see how the menu is mapped.

HINT: Remember that because the Menu and Parameter lists are looped, the ↑ key can quickly move you to the last Menu or Parameter in the loop.

The Menu System Map

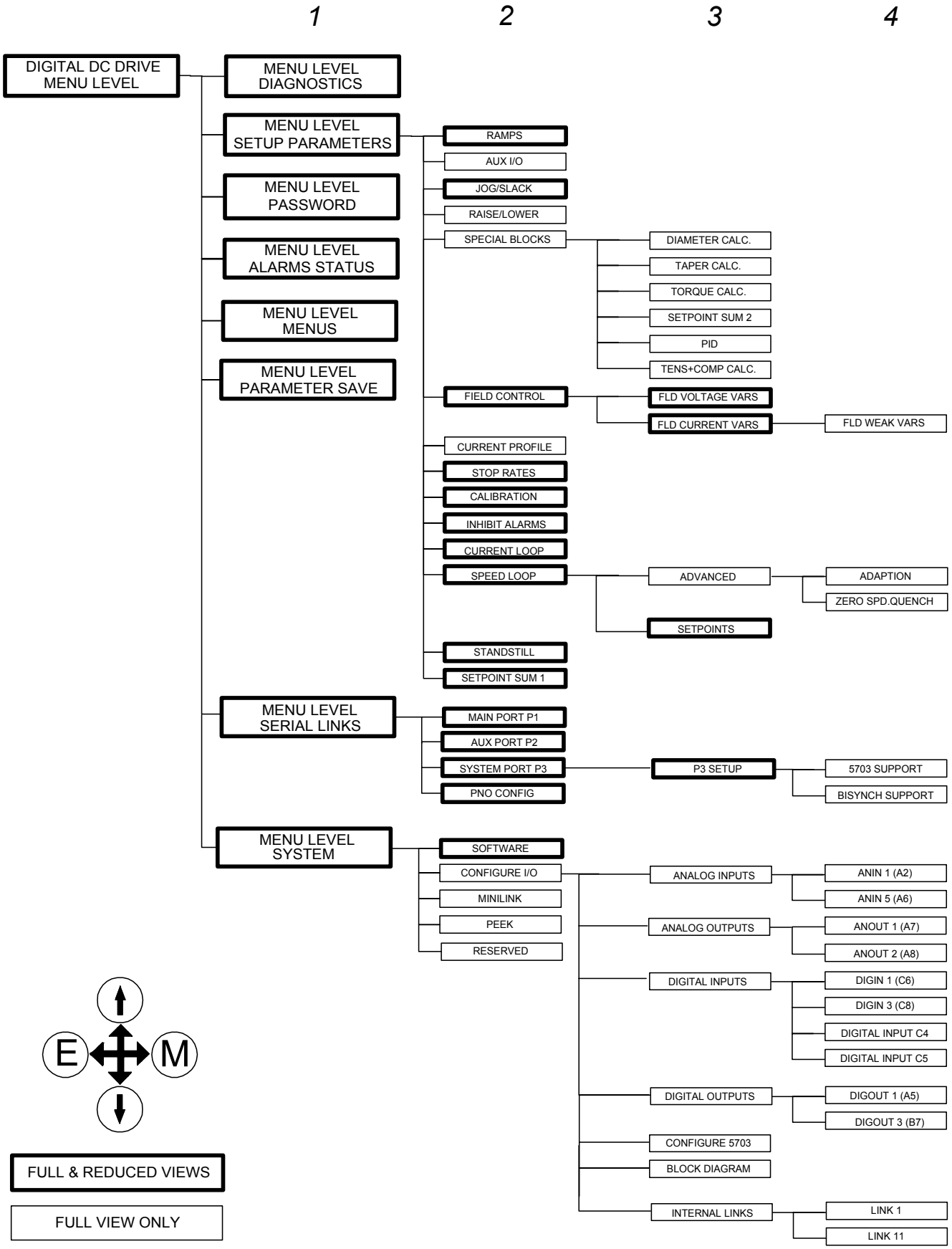

Changing a Parameter Value

Refer to "The Menu System Map" above to see how the menu is mapped.

Each menu contains parameters.

*With the Parameter you want on view, press **M** to begin editing.*

The up (↑) and down (↓) keys will now change the parameter/function value.

*Press **E** to finish editing.*

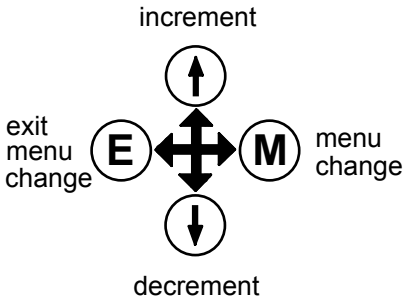

EDITING PARAMETERS

The four keys will once again navigate around the Menus. Refer back to " Navigating the Menu System", page 5-3.

Alarm Message Displays

An alarm message will be displayed on the MMI when the unit is tripped.

- The Converter has tripped.
  The top line indicates a trip has occurred while the bottom line gives the reason for the trip. See example opposite.

```
*** ALARM ***
HEATSINK TRIP
```

Acknowledge the trip message by pressing the **E** key.

Refer to Chapter 7: "Trips and Fault Finding" for trip messages and reasons.

Quick Diagnostics

Hold down the **M** key to enter the DIAGNOSTICS menu in the first entry, SPEED DEMAND.

Special Key Combinations

A special key combination restores **ALL** default parameters to the Converter.

- Hold down the four MMI keys (↑, ↓, **E**, **M**), then power-up the Converter.

Special Menu Features

Menu Viewing Levels

For ease of operation there are two `viewing levels` for the MMI: full view or reduced view. The setting for the viewing level decides how much of the menu system will be displayed.

Refer to "The Menu System Map", page 5-4 to see how the viewing level changes the displayed menu.

To change the viewing level, go to the MENUS menu. The first parameter in this menu, FULL MENUS selects the viewing level.

- Select DISABLED to use the reduced menu system.
- Select ENABLED to use the full menu system.

Selecting the Display Language

There is an option to select a different display language.

The choice of display language is selected by the LANGUAGE parameter in MENUS menu. Remember to perform a PARAMETER SAVE if you need the new language to be saved on power-down.

The available languages are: ENGLISH and FRENCH. However, other languages are available by contacting Parker SSD Drives.

Password Protection

When in force, the password prevents unauthorised parameter modification by making all parameters “read-only”. If you attempt to modify a password protected parameter, it will cause “PASSWORD ??” to flash on the display. By default, the password feature is disabled, i.e. 0x0000.

There are two password parameters, stored in the PASSWORD menu at level 1: ENTER PASSWORD and CHANGE PASSWORD.

The ENTER PASSWORD and CHANGE PASSWORD values are hidden by “XXXX” until you press the **M** key to begin editing the parameter.

To Activate Password Protection

1. Use the ↑ (UP) and ↓ (DOWN) keys in the CHANGE PASSWORD parameter to set a password (anything other than 0000). Press the **E** key to exit the parameter.

```
CHANGE PASSWORD
0x0000
```

2. Move to the ENTER PASSWORD parameter. Enter any number other than the password and press the **E** key to exit. The system is now `password locked’.

```
ENTER PASSWORD
0x0000
```

Having activated the password protection, you can no longer edit the CHANGE PASSWORD parameter until you deactivate the password protection.

To Deactivate Password Protection

Enter the current password in the ENTER PASSWORD parameter. Press the **E** key to exit.

```
ENTER PASSWORD
0x0000
```

To Reactivate Password Protection

Having deactivated your password, you can quickly reactivate the same password by pressing the **M** key when in the CLEAR PASSWORD menu.

```
CLEAR PASSWORD
```

This clears the value of the password in the CHANGE PASSWORD menu and instead displays “****”.

Note: *At default the password is 0000, password protection is not activated because 0000 is the value for both CHANGE PASSWORD and ENTER PASSWORD.*

How to Save, Restore and Copy your Settings

Saving Your Application

Note: *Ensure that CONFIGURE ENABLE = DISABLED before performing a PARAMETER SAVE (when set to ENABLED, the drive cannot run).*

MMI Menu Map

1 SYSTEM

2 CONFIGURE I/O

CONFIGURE ENABLE

The PARAMETER SAVE menu, available in the both the full and reduced view levels, is used to save any changes you make to the MMI settings.

Pressing the ↑ (UP) key, as instructed, saves all parameter values in non-volatile memory, i.e. values are stored during power-down.

PARAMETER SAVE
UP TO ACTION

Restoring Saved Settings

If you are unsure about any changes you have made and you have not yet performed a PARAMETER SAVE, simply switch the Converter off, and power-up again. The “last saved” parameter settings will be restored.

Copying an Application

Copying an application requires a host computer connection to the Converter’s P3 port. Information can then be downloaded to the computer (and uploaded to the Converter).

Refer to Chapter 14: “Serial Communications” for further information.

PROGRAMMING YOUR APPLICATION

Programming with Block Diagrams

You can program the Converter for specific applications using the MMI or suitable programming tool, such as "ConfigEd Lite" which is Parker SSD Drives' block programming software.

The Converter is supplied with a basic set-up which can be used as a starting point for application-specific programming. This programming could simply involve the inputting of parameter values, or it may require the making or breaking of programmable links, which is a feature of this unit.

Block diagram programming provides a visual method of planning the software to suit your application. The basic block diagram is provided in Chapter 15 and shows the software connections consisting of *function blocks* and *links:*

- Each function block contains the parameters required for setting-up a particular processing feature. Sometimes more than one function block is provided for a feature, i.e. for multiple digital inputs.
- Software links are used to connect the function blocks. Each link transfers the value of an output parameter to an input parameter of another (or the same) function block.

Each individual block is a processing feature, i.e. it takes the input parameter, processes the information, and makes the result available as one or more output parameters.

Modifying a Block Diagram

Configuration and Parameterisation Modes

There are two modes of operation used while modifying a block diagram: *Parameterisation* and C*onfiguration* modes.

The CONFIGURE ENABLE command is used to toggle between these two modes of operation.

MMI Menu Map

1 SYSTEM

2 CONFIGURE I/O

CONFIGURE ENABLE

DEFAULT

Parameterisation Mode (CONFIGURE ENABLE = DISABLED)
In parameterisation mode you can change parameter values. The Converter can be running or stopped. Note that some parameters can only be changed when the Converter is stopped. It is not possible to modify the internal links when the Converter is in parameterisation mode.

Configuration Mode (CONFIGURE ENABLE = ENABLED)
In the configuration mode you can modify the links in the function block diagram. You can also change parameter values, as above. The Converter cannot run in this mode.

Making and Breaking Links in Configuration Mode

Links can be moved, added or deleted from a block diagram whilst in the Configuration mode. There are 12 links available, each has its own identification number ("link" number). You make a link by setting the link's "source" and "destination" tags to be the two parameter tag numbers to be linked. The outputs of function blocks are not updated whilst in this mode.

Note: *Links 11 and 12 can be configured to perform one of a number of basic functions upon the source and/or auxiliary source tag values, to be output at the selected destination tag.*

Programming Rules

The following rules apply when programming:

Parameterisation Mode (CONFIGURE ENABLE = DISABLED)

- Function block output parameter values cannot be changed (because they are a result of the function block's processing)
- Function block input parameter values that receive their values from a link cannot be changed (as they will change back to the value they receive from the link when the Converter is running).

Configuration Mode (CONFIGURE ENABLE = ENABLED)

- A link's destination tag must be set to an input parameter (only one link per input parameter).
- A link's source tag may be set to any parameter. Both input and output parameters can be used as a source.
- Disable a link/function block by setting the "destination" and "source" tag to zero.

Saving Your Modifications

Ensure that CONFIGURE ENABLE = DISABLED before performing a PARAMETER SAVE.

If parameter values or links have been modified, the new settings must be saved. The Converter will then retain the new settings during power-down. Refer to Chapter 5: "The Man-Machine Interface (MMI)" - Saving Your Application.

Understanding the Function Block Description

The following function blocks show the parameter information necessary for programming the Converter.

Input parameters are shown on the left hand side, and output parameters are shown on the right hand side of the block.

Some parameters are indicated as "Reserved", these parameters are for use by Parker SSD Drives engineers.

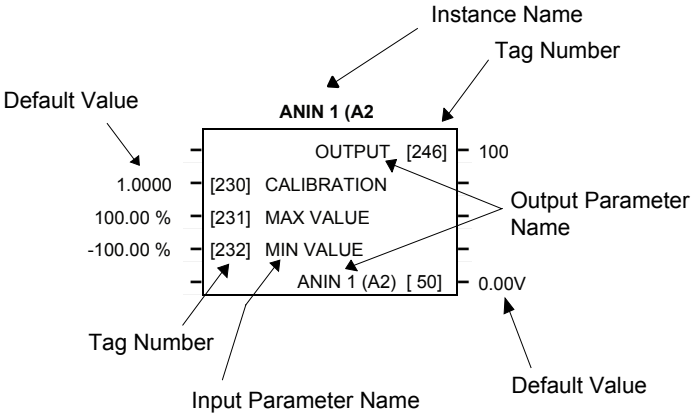

Figure 6-1 Function Block Parameter Information

Instance Name	Names the function block type
Default Value	The default value of the unmodified factory set-up
Input/Output Parameter Name	The name shown on ConfigEd Lite
Tag Number	Unique identification used for linking and communications

MMI Menu Map

1 SYSTEM
2 CONFIGURE I/O
3 ANALOG INPUTS
4 ANIN 1 (A2)
4 ANIN 5 (A6)
- CALIBRATION
- MAX VALUE
- MIN VALUE
- DESTINATION TAG

MMI Menu Maps

The function block descriptions include an easy-find menu showing the menu levels and titles encountered to find the appropriate menu title, and the parameters contained in the menu(s).

The menu maps are shown as if the full view level is selected.

Where there is more than one sub-menu, i.e. ANALOG INPUTS as illustrated, the parameters shown will be for the last sub-menu. In many cases, these parameters will reflect the name and number of the last sub-menu.

Because of this intuitive naming of parameters, which is designed to make using the Operator Station easier, MMI parameter names may vary slightly from Function Block names.

A function block may also be represented by more than one MMI menu, e.g. FIELD CONTROL. In contrast, the DIAGNOSTICS menu on the MMI is greatly reduced in the DIAGNOSTICS function block, the remaining parameters being included in related function blocks.

Hexadecimal Representation of Trips

The HEALTH WORD and HEALTH STORE parameters use a four digit hexadecimal number to identify individual trips. Each trip has a unique corresponding number as shown below.

Trip		Trip Code			
		Digit 4	Digit 3	Digit 2	Digit 1
0	OVERSPEED				1
1	MISSING PULSE				2
2	FIELD OVER I				4
3	HEATSINK TRIP				8
4	THERMISTOR			1	
5	OVERVOLTS (VA)			2	
6	SPEED FEEDBACK			4	
7	ENCODER FAILED			8	
8	FIELD FAILED		1		
9	3 PHASE FAILED		2		
10	PHASE LOCK		4		
11	5703 RCV ERROR		8		
12	STALL TRIP	1			
13	OVER I TRIP	2			
14	Not used	4			
15	ACCTS FAILED	8			

Decimal number	Display
10	A
11	B
12	C
13	D
14	E
15	F

When more than one trip is to be represented at the same time then the trip codes are simply added together to form the value displayed. Within each digit, values between 10 and 15 are displayed as letters A to F

For example, if the HEALTH WORD parameter is **01A8** then this represents a “1” in digit 3, an “8” and a “2” in digit 2, (8+2 = 10, displayed as A) and an 8 in digit 1. This in turn represents the active trips FIELD FAILED, ENCODER FAILED, OVERVOLTS (VA) and HEATSINK TRIP (an unlikely situation).

Function Block Descriptions

Note: *Remember to select the correct mode, Parameterisation or Configuration, whilst editing. Refer back to " Modifying a Block Diagram", page 6-1. You must select the full view level to see all of the function blocks, go to MENUS menu at level 1 on the MMI.*

Function Block	Page
ANALOG INPUTS	6-5 *
ANALOG OUTPUTS	6-7 *
AUX I/O	6-8 *
AUX PORT P2	6-10
CALIBRATION	6-11 *
CURRENT LOOP	6-14 *
CURRENT PROFILE	6-17
DIAGNOSTICS	6-18 *
DIAMETER CALC	6-22
DIGITAL INPUTS	6-24
↳ DIGITAL INPUT C4 & C5	
DIGITAL OUTPUTS	6-26
FIELD CONTROL	6-27 *
↳ FLD VOLTAGE VARS	
↳ FLD WEAK VARS	
INHIBIT ALARMS	6-30
JOG/SLACK	6-32 *
LINK 11 & LINK 12	6-34

Function Block	Page
MAIN PORT P1	6-36
MENUS	6-37
miniLINK	6-38
PID	6-39 *
RAISE/LOWER	6-42 *
RAMPS	6-44 *
SETPOINT SUM 1	6-48 *
SETPOINT SUM 2	6-49
SPEED LOOP	6-51 *
↳ SETPOINTS	
ADVANCED (Speed Loop)	6-55
↳ ADAPTION	
↳ ZERO SPD QUENCH	
STANDSTILL	6-56 *
STOP RATES	6-57 *
SYSTEM PORT P3	6-59
↳ P3 SETUP	
↳ BISYNCH SUPPORT	
↳ 5703 SUPPORT	
TAPER CALC	6-60
TENS+COMP CALC	6-61
TORQUE CALC	6-63
USER FILTER	6-64

* These function blocks contain parameters from the DIAGNOSTICS menu on the MMI.

ANALOG INPUTS

MMI Menu Map

1 SYSTEM
2 CONFIGURE I/O
3 ANALOG INPUTS
4 ANIN 1 (A2)
4 ANIN 2 (A3)
4 ANIN 3 (A4)
4 ANIN 4 (A5)
4 ANIN 5 (A6)
- CALIBRATION
- MAX VALUE
- MIN VALUE
- DESTINATION TAG

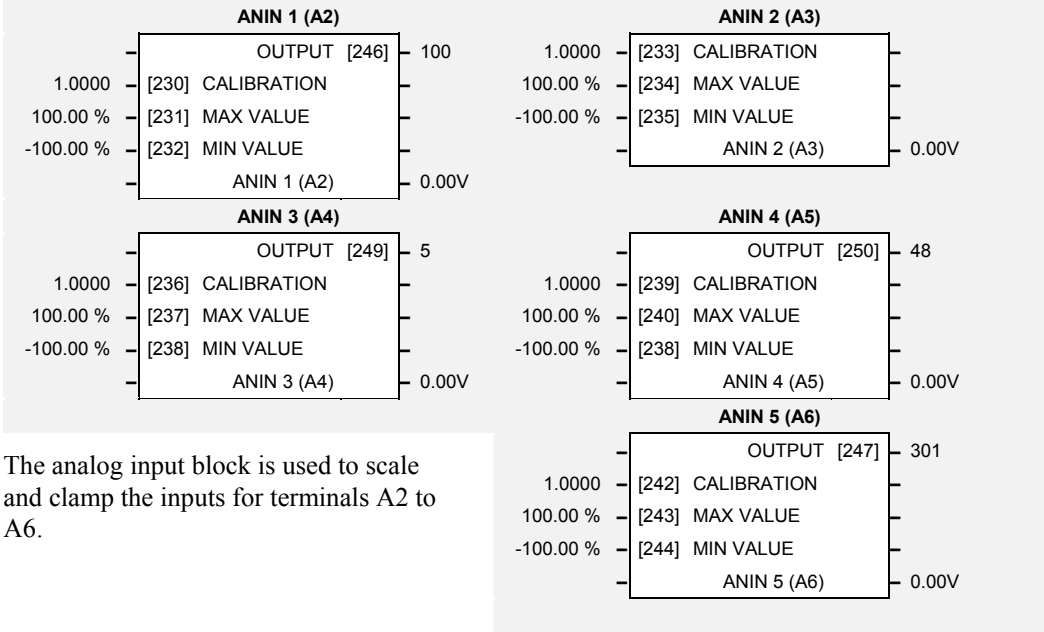

The analog input block is used to scale and clamp the inputs for terminals A2 to A6.

Note: *ANIN 2 (A3) is not reconfigurable and is connected directly to the SETUP PARAMETERS:: SPEED LOOP:: SETPOINTS:: RATIO 2 (A3) input, and the SETUP PARAMETER:: CURRENT LOOP:: I DMD. ISOLATE switch. Refer to Chapter 15: The Default Application" block diagram for more information.*

Tag 493 allows access to the calibrated value of ANIN 2 (via an internal link for example). To avoid interference with other drive functions the parameter RATIO 2 (A3) must be set to zero, and the I DMD. ISOLATE parameter must be set to DISABLED, i.e. selecting the Speed Loop as shown in the main block diagram.

ANIN 2 (A3) is a direct input into the speed loop/current loop and is scanned synchronously with the current loop (typically every 3.33ms) rather than every micro cycle time (typically 7ms). Therefore it should be used for any signal whose response is critical e.g. a trim input from a digital speed and position locking system.

Parameter Descriptions

CALIBRATION *Range: -3.0000 to 3.0000*

The analog input scaling ratio.

MAX VALUE *Range: -300.00 to 300.00*

The maximum value of the scaled analog input.

MIN VALUE *Range: -300.00 to 300.00*

The minimum value of the scaled analog input

ANIN 1 (A2) to ANIN 5 (A6)

Refer to the DIAGNOSTICS function block description, page 6-18.

OUTPUT *Range: 0 to 499*

(DESTINATION TAG)
The destination Tag No. of the scaled analog input value.

Functional Description

Configurable Analog Inputs

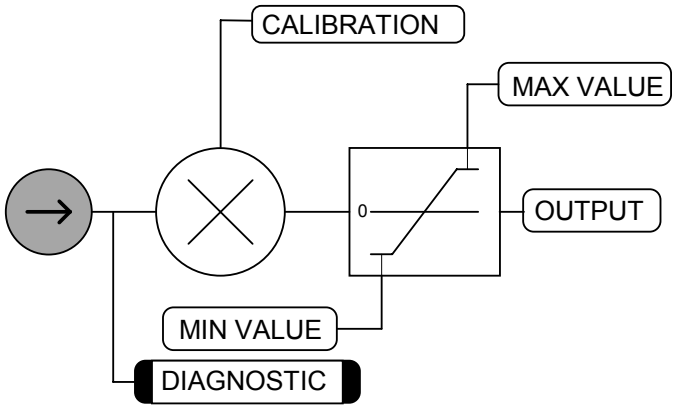

ANALOG OUTPUTS

MMI Menu Map

1 SYSTEM
2 CONFIGURE I/O
3 ANALOG OUTPUTS
4 ANOUT 1 (A7)
4 ANOUT 2 (A8)
- % TO GET 10V
- MODULUS
- OFFSET
- SOURCE TAG

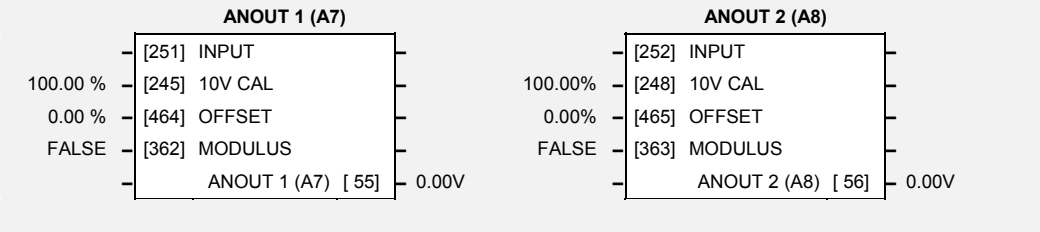

This function block converts the demand percentage into a form suitable for driving the analog output electronics of the Converter.

Parameter Descriptions

INPUT *Range: 0 to 499*

(SOURCE TAG)
The source Tag No. of the output value.

10V CAL *Range: -300.00% to 300.00%*

(% TO GET 10V)
Scaler value which produces 10V output.

OFFSET *Range: -100.00% to 100.00%*

Offset value added to the normal output value after the scaler and before the modulus.

MODULUS *Range: TRUE/FALSE*

Unsigned analog output enable

ANOUT 1 (A7) to ANOUT 2 (A8)

Refer to the DIAGNOSTICS function block description, page 6-18.

Functional Description

Configurable Analog Outputs

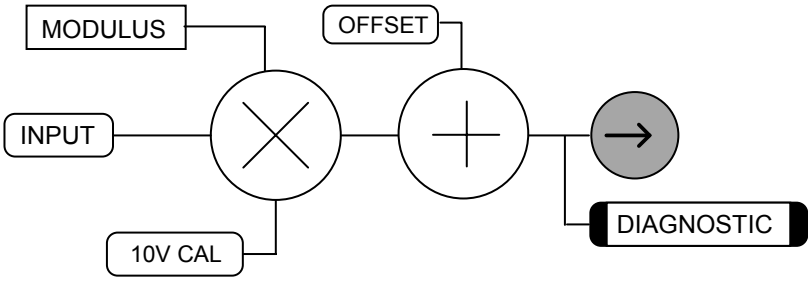

AUX I/O

MMI Menu Map

1 SETUP PARAMETERS

2 AUX I/O

- AUX START
- AUX JOG
- AUX ENABLE
- AUX DIGOUT 1
- AUX DIGOUT 2
- AUX DIGOUT 3
- ANOUT 1
- ANOUT 2
- JOG/SLACK
- ENABLE

The auxiliary I/O parameters are primarily intended to extend the functionality of the serial links by allowing them access to the drive analog and digital terminals.

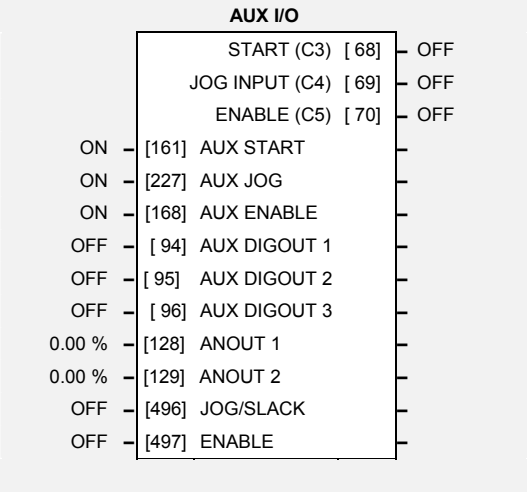

Parameter Descriptions

AUX START *Range: ON/OFF*

Software Start/Run command.

AUX JOG *Range: ON/OFF*

Software Jog command.

AUX ENABLE *Range: ON/OFF*

Software Enable command.

AUX DIGOUT 1 *Range: ON/OFF*

Software digital output 1.

AUX DIGOUT 2 *Range: ON/OFF*

Software digital output 2.

AUX DIGOUT 3 *Range: ON/OFF*

Software digital output 3.

ANOUT 1 *Range: -100.00 to 100.00 %*

Software analog output 1.

ANOUT 2 *Range: -100.00 to 100.00 %*

Software analog output 2.

JOG/SLACK

Reserved parameter for use by Parker SSD Drives.

ENABLE

Reserved parameter for use by Parker SSD Drives.

START (C3)

Refer to the DIAGNOSTICS function block description, page 6-18.

JOG INPUT (C4)

(DIGITAL INPUT C4)

Refer to the DIAGNOSTICS function block description, page 6-18.

ENABLE (C5)

(DIGITAL INPUT C5)

Refer to the DIAGNOSTICS function block description, page 6-18.

Functional Description

In the case of auxiliary digital inputs AUX START, AUX JOG and AUX ENABLE, the overall input will be the result of the "AND" gating of the normal terminal signal with the auxiliary signal.

In the case of the digital and analog outputs, the relevant Tag No's are internal memory locations which can be attached by configuration to the digital or analog output terminals and are controlled by the serial links or the MMI.

ANOUT 1 & 2 can also be used as general "staging posts" for connecting inputs to outputs.

Example: Connect Analog Input 1 (A2) directly to Analog Output 1 (A7)

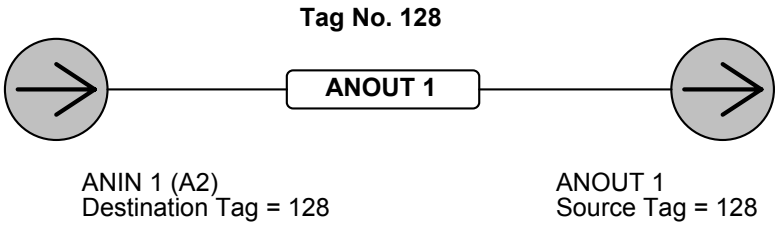

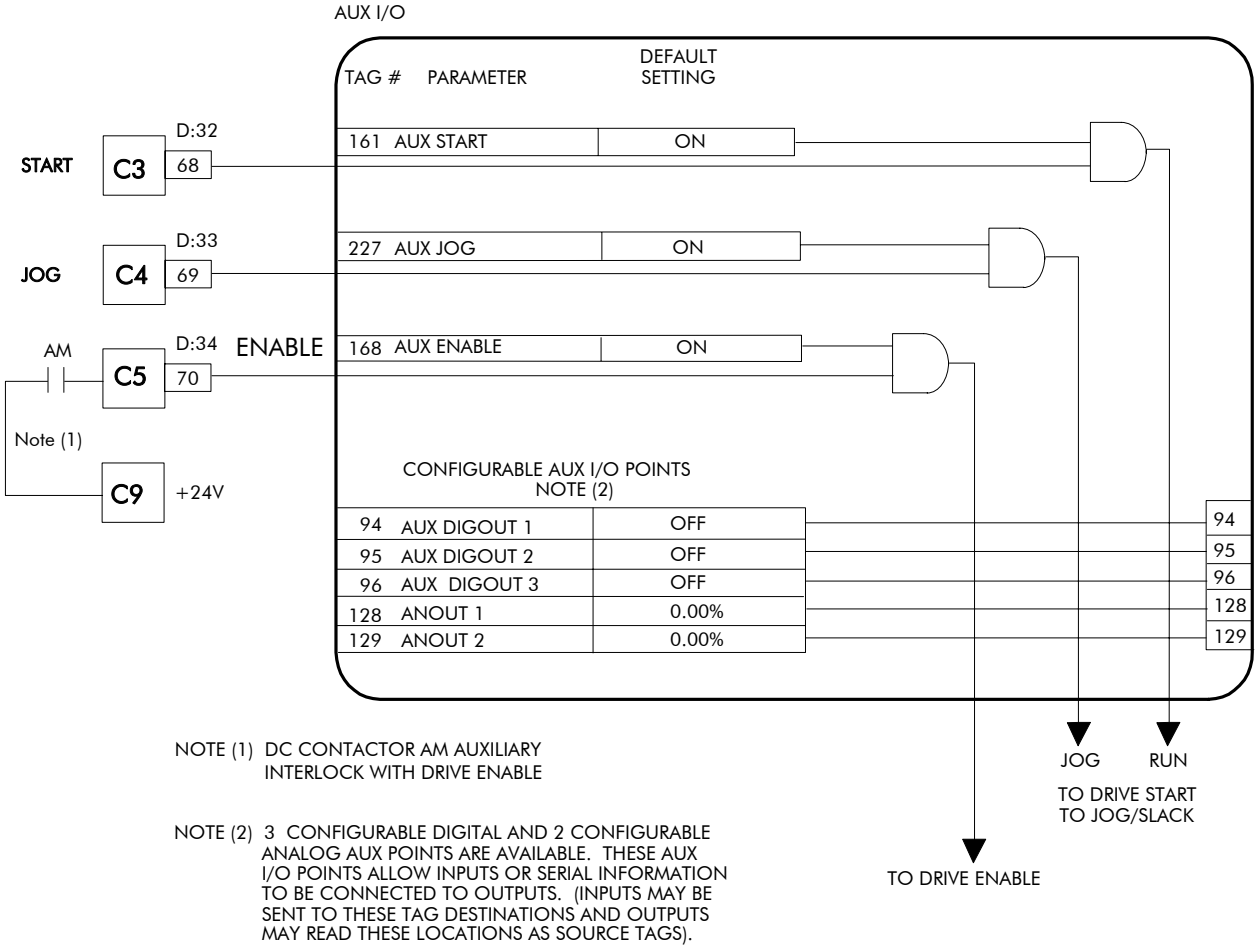

NOTE (1) DC CONTACTOR AM AUXILIARY INTERLOCK WITH DRIVE ENABLE

NOTE (2) 3 CONFIGURABLE DIGITAL AND 2 CONFIGURABLE ANALOG AUX POINTS ARE AVAILABLE. THESE AUX I/O POINTS ALLOW INPUTS OR SERIAL INFORMATION TO BE CONNECTED TO OUTPUTS. (INPUTS MAY BE SENT TO THESE TAG DESTINATIONS AND OUTPUTS MAY READ THESE LOCATIONS AS SOURCE TAGS).

MMI Menu Map

1 SERIAL LINKS

2 AUX PORT P2
- SRL LINK ENABLE
- GROUP ID (GID)
- UNIT ID (UID)
- PROTOCOL
- BAUD RATE
- ESP SUP. (ASCII)
- CHANGEBAND (BIN)
- ERROR REPORT
- PNO.7

AUX PORT P2

This function block configures the port for connecting to a suitable unit, i.e. the 5721 Operator Station for controlling the 5720 Quadraloc controller.

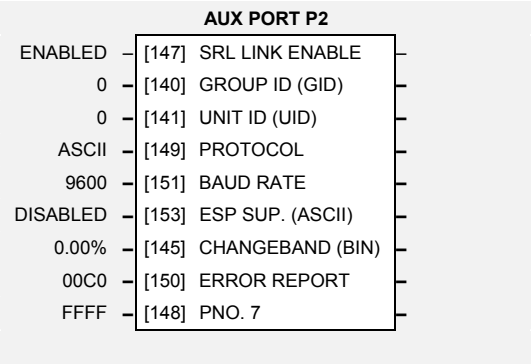

Parameter Descriptions

SRL LINK ENABLE *Range: ENABLED/DISABLED*

Enables port operation.

GROUP ID (GID) *Range: 0 to 7*

The Parker SSD Drives protocol group identity address.

UNIT ID (UID) *Range: 0 to 15*

The Parker SSD Drives protocol unit identity address.

PROTOCOL *Range: See below*

Selects the protocol to be used. The selections are:

ASCII
BINARY
OPTION (select OPTION if say a Profibus option is fitted)

BAUD RATE *Range: See below*

Selects the Baud Rate.

300
600
1200
2400
4800
9600 (default)
19200

ESP SUP. (ASCII) *Range: ENABLED/DISABLED*

Enable if communicating with a unit using Parker SSD Drive's own ESP protocol.

CHANGEBAND (BIN) *Range: 0.00% to 327.67%*

Percentage change in value to trigger a BINARY Enquiry Poll update.

ERROR REPORT *Range: 0000 to FFFF*

Displays the last error as a hexadecimal code. Writing any value to this parameter will set the value to >00C0 (No Error). Refer to Chapter 14: "Serial Communications" - Reference for a list of codes.

PNO. 7 *Range: 0000 to FFFF*

Control word for Multi-Parameter Polling (refer to the COMMS Option Board Technical Manual - Parameter Specification Tables.

CALIBRATION

MMI Menu Map

1 SETUP PARAMETERS

2 CALIBRATION

- ARMATURE V CAL
- IR COMPENSATION
- ENCODER RPM
- ENCODER LINES
- ANALOG TACH CAL
- ZERO SPD. OFFSET
- ARMATURE I (A9)
- SPD FBK ALM LEVEL
- STALL THRESHOLD
- STALL TRIP DELAY
- OVERSPEED LEVEL
- FIELD I CAL

This function block contains motor-specific parameters.

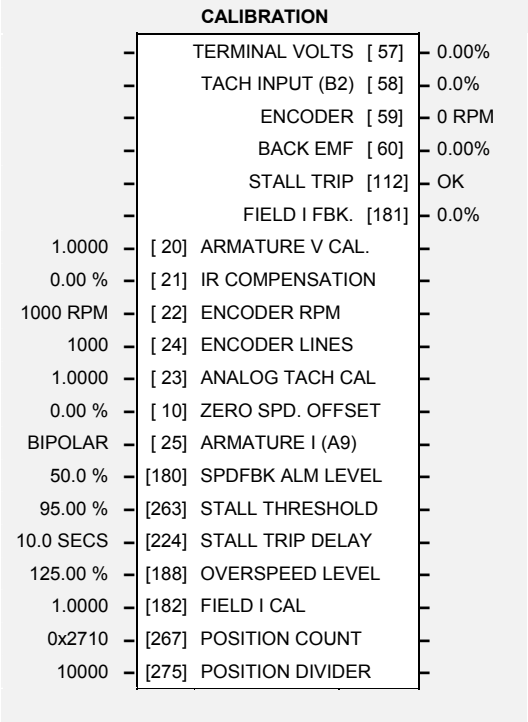

Parameter Descriptions

ARMATURE V CAL

Range: 0.9800 to 1.1000

Trim adjustment of the motor armature volts to give exactly 100% at the required actual voltage value (e.g. 460V etc.).

Note: - Primary voltage calibration is achieved by adjusting VA calibration values using SW7.

IR COMPENSATION

Range: 0.00 to 100.00 %

Compensation for motor IR drop to improve regulation when using armature voltage feedback as the speed feedback.

ENCODER RPM

Range: 0 to 6000 RPM

Motor top speed setting when using encoder feedback.

ENCODER LINES

Range: 10 to 5000

The 5901 Microtach has 1000 lines per revolution as standard. Proprietary encoders of other specifications can be normalised by setting this parameter as appropriate.

ANALOG TACH CAL

Range: 0.9800 to 1.1000

Trim adjustment of the motor speed to give exactly 100% at the required actual speed value (e.g. 1500 RPM etc). *Note: Primary tacho calibration is achieved by adjusting SW1 - 3 on the tacho calibration board.*

ZERO SPD. OFFSET

Range: -5.00 to 5.00 %

If the speed feedback is not zero when the drive is stationary (possibly due to hardware offsets etc.) the setting of this parameter to the value of the offset will result in a zero reading from the speed feedback.

ARMATURE I (A9)

Range: UNIPOLAR/BIPOLAR

Selects operation of the current meter output (terminal A9), either bipolar or unipolar.

SPDFBK ALM LEVEL

Range: 0.0 to 100.0 %

The speed feedback alarm compares speed feedback to armature voltage. The alarm level is the threshold which the difference between the two signals should exceed for the alarm to activate.

STALL THRESHOLD *Range: 0.00 to 200.00 %*

Stall comparator current feedback threshold level.

STALL TRIP DELAY *Range: 0.1 to 600.0 SECS*

Stall comparator time-out delay before stall output becomes true.

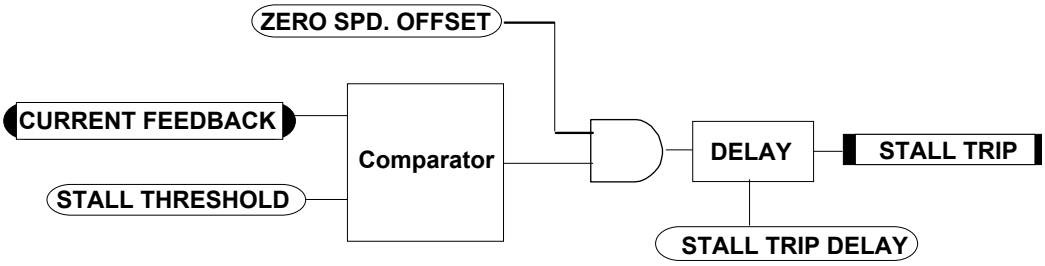

OVERSPEED LEVEL *Range: 0.00 to 200.00 %*

Speed feedback level for overspeed alarm

FIELD I CAL. *Range: 0.9800 to 1.1000*

Trim adjustment of the motor field current to give exactly 100% at the required actual current value (e.g. 1.5A etc.). *Note: Primary field calibration is achieved by adjusting IF calibration using SW1 - 3.*

POSITION COUNT

Reserved parameter for use by Parker SSD Drives.

POSITION DIVIDER

Reserved parameter for use by Parker SSD Drives.

TERMINAL VOLTS

Refer to the DIAGNOSTICS function block description, page 6-18.

TACH INPUT (B2)

Refer to the DIAGNOSTICS function block description, page 6-18.

ENCODER

Refer to the DIAGNOSTICS function block description, page 6-18.

BACK EMF

Refer to the DIAGNOSTICS function block description, page 6-18.

STALL TRIP

Refer to the DIAGNOSTICS function block description, page 6-18.

FIELD I FBK.

Refer to the DIAGNOSTICS function block description, page 6-18.

Functional Description

CALIBRATION

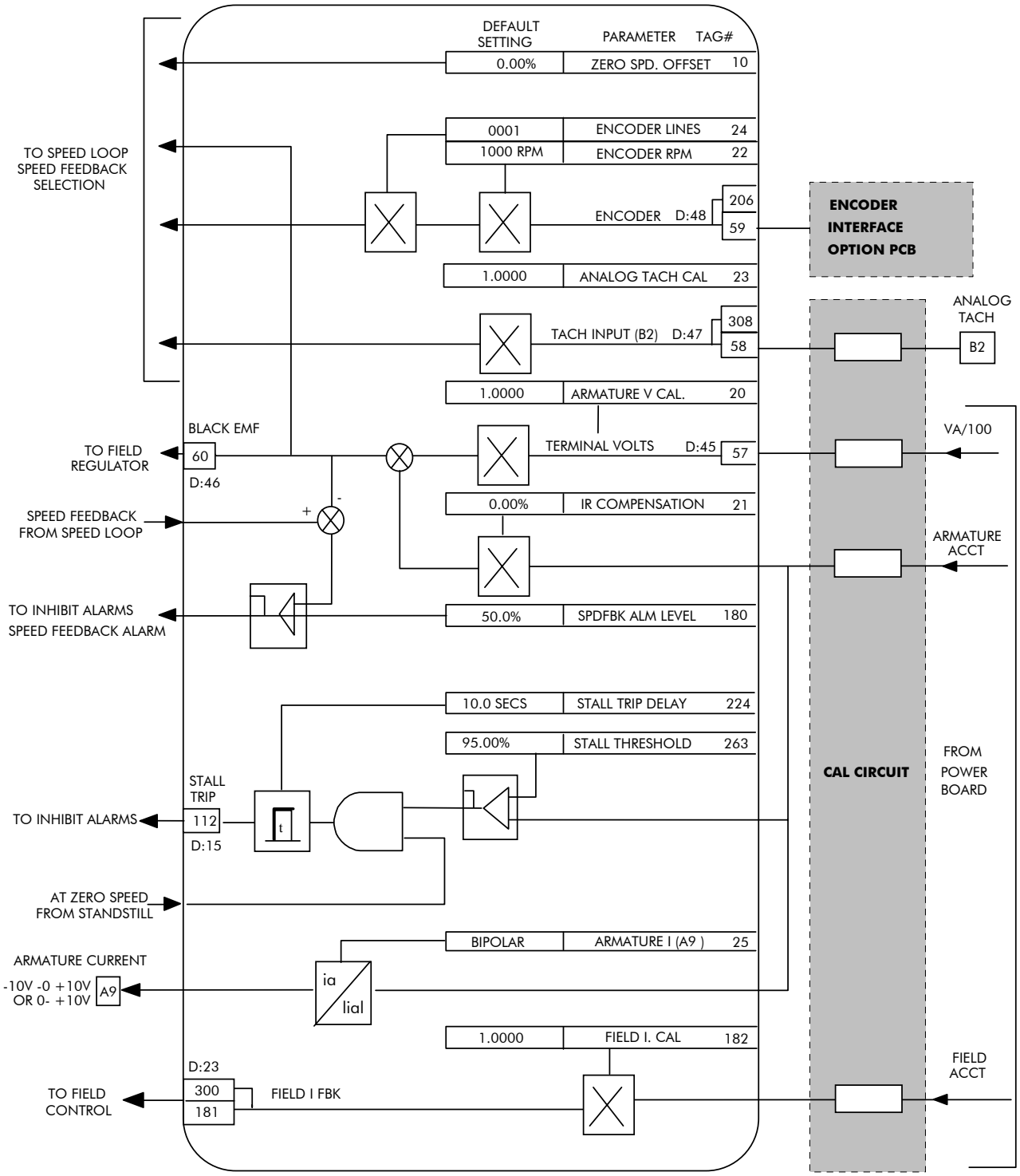

CURRENT LOOP

MMI Menu Map

1 SETUP PARAMETERS

2 CURRENT LOOP

- CUR. LIMIT/SCALER
- MAIN CURR. LIMIT
- PROP GAIN
- INT. GAIN
- AUTOTUNE
- DISCONTINUOUS
- ADDITIONAL DEM
- BIPOLAR CLAMPS
- REGEN MODE
- POS. I CLAMP
- NEG. I CLAMP
- I DMD. ISOLATE

This function block allows user parameterisation of the conventional current/torque loop of the converter.

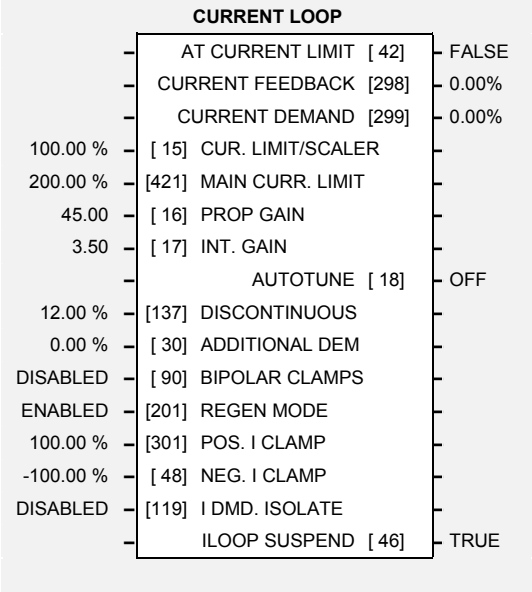

Parameter Descriptions

CUR. LIMIT/SCALER *Range: 0.00 to 200.00 %*

Current limit scaler. It scales bipolar/unipolar clamps.

MAIN CURR. LIMIT *Range: 0.00 to 200.00 %*

Main current limit parameter which is independent of current limit scaler and in series with the other three current limit blocks.

PROP GAIN *Range: 0.00 to 200.00*

Proportional gain control for armature current PI loop. This parameter is set during the autotune function.

INT. GAIN *Range: 0.00 to 200.00*

Integral gain control for armature current PI loop. This parameter is set during the autotune function.

DISCONTINUOUS *Range: 0.00 to 200.00 %*

Discontinuous-to-continuous mean armature current boundary level. This parameter is set during the autotune function and affects the performance of the adaptive algorithm.

ADDITIONAL DEM *Range: -200.00 to 200.00 %*

Additional current demand input.

BIPOLAR CLAMPS *Range: ENABLED/DISABLED*

Select input for bipolar (asymmetric) or unipolar (symmetric) current clamps for the 4 quadrants of operation. Default setting of DISABLED means UNIPOLAR clamps selected.

REGEN MODE *Range: ENABLED/DISABLED*

Select input for regenerative (4-quadrant) or non-regenerative (2-quadrant) mode of operation. If the stack is a 2-quadrant (only one thyristor bridge) this parameter should be set to Disabled.

Note: we recommend that this parameter is not changed whilst the machine is running.

POS. I CLAMP *Range: -200.00 to 200.00 %*

Positive current clamp in Bipolar Clamp mode.

NEG. I CLAMP *Range: -200.00 to 200.00 %*

Negative current clamp in Bipolar Clamp mode.
Note on bipolar current clamps: these clamps in bipolar mode can cross-over onto the same quadrant as long as the POS. I CLAMP is always greater (algebraically) than the NEG. I CLAMP.

I DMD. ISOLATE *Range: ENABLED/DISABLED*

Speed loop bypass; the current demand is taken from ANIN 2 (A3).

The simplified diagram below shows how the I DMD ISOLATE parameter selects the controlling loop.

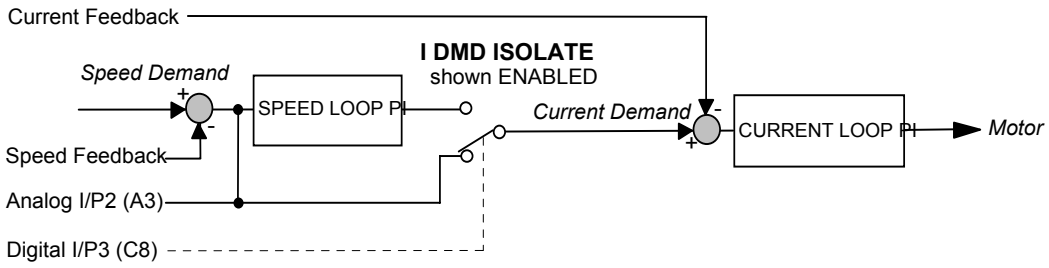

AUTOTUNE *Range: ON/OFF*

This is the autotune function trigger input.

ILOOP SUSPEND

Reserved parameter for use by Parker SSD Drives.

AT CURRENT LIMIT

Refer to the DIAGNOSTICS function block description, page 6-18.

CURRENT FEEDBACK

Refer to the DIAGNOSTICS function block description, page 6-18.

CURRENT DEMAND

Refer to the DIAGNOSTICS function block description, page 6-18.

Functional Description

CURRENT LOOP

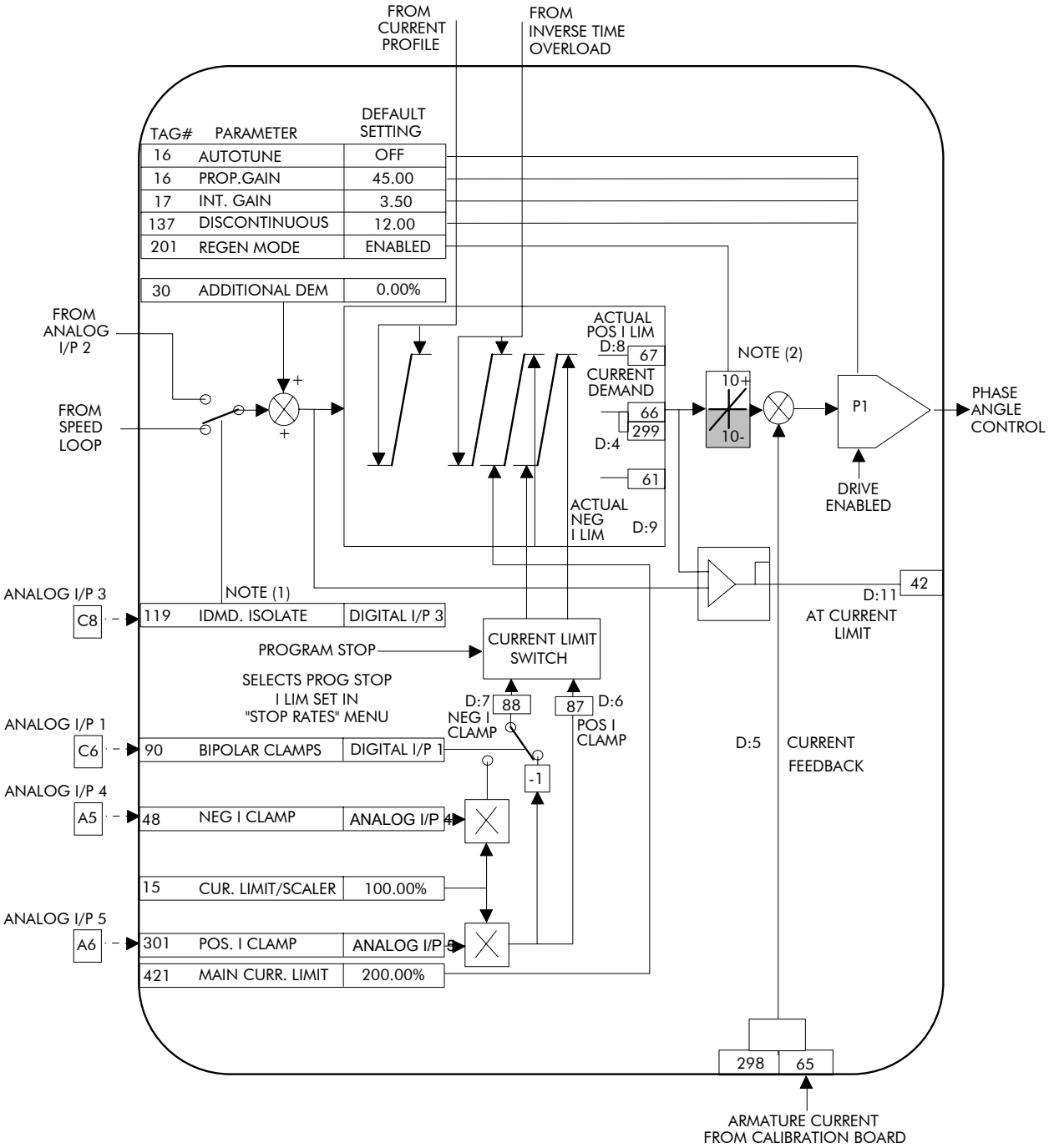

Note 1: IDMD isolate removes speed loop demand and selects analog I/P 2 as current regulator demand.
IDMD isolate is overridden by program stop and stop to return drive to speed regulation.

Note 2: Regen mode disable prevents negative current demand. Non-regenerative drives should have regen mode disabled.

CURRENT PROFILE

MMI Menu Map

1 SETUP PARAMETERS

2 CURRENT PROFILE

- SPD BRK 1 (LOW)
- SPD BRK 2 (HIGH)
- IMAX BRK 1 (SPD1)
- IMAX BRK 2 (SPD2)

When speed control is obtained by field weakening, the ability of the motor to commutate armature current is reduced at low field currents. Also some motors exhibit commutation limitations at higher speeds even with rated field current.

CURRENT PROFILE

100.0 %	[32] SPD BRK 1 (LOW)
100.0 %	[31] SPD BRK 2 (HIGH)
200.0 %	[93] IMAX BRK 1 (SPD1)
200.0 %	[33] IMAX BRK 2 (SPD2)

Parameter Descriptions

SPD BRK 1 (LOW) *Range: 0.0 to 100.0 %*

This is the motor speed at which current limit profiling begins.

SPD BRK 2 (HIGH) *Range: 0.0 to 100.0 %*

This is the upper speed limit at which current limit profiling ends.

IMAX BRK 1 (SPD1) *Range: 0.0 to 200.0 %*

This sets the current limit value at or below speed break-point 1, provided the other current limits are greater than this setting.

IMAX BRK 2 (SPD2) *Range: 0.0 to 200.0 %*

This sets the current limit value at or above speed break-point 2, provided the other current limits are greater than this setting.

Functional Description

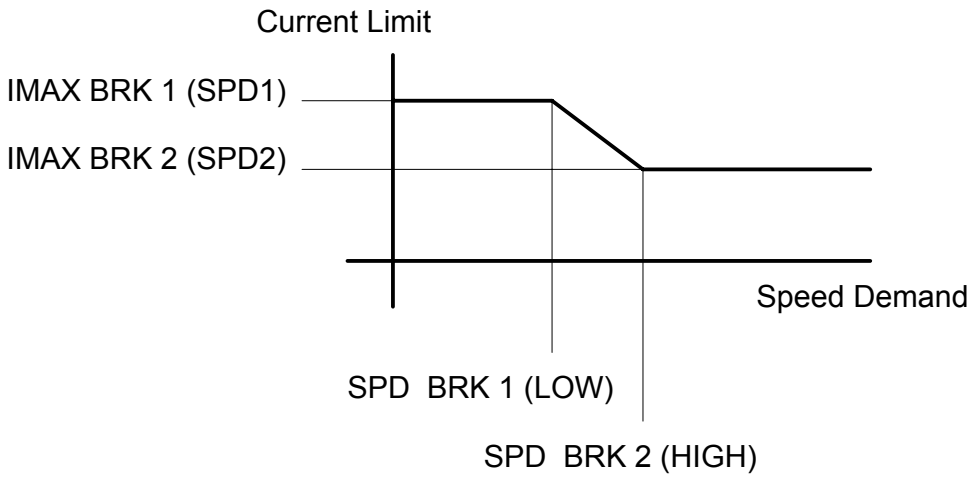

MMI Menu Map

1	DIAGNOSTICS
D:1	SPEED DEMAND
D:2	SPEED FEEDBACK
D:3	SPEED ERROR
D:4	CURRENT DEMAND
D:5	CURRENT FEEDBACK
D:6	POS. I CLAMP
D:7	NEG. I CLAMP
D:8	ACTUAL POS I LIM
D:9	ACTUAL NEG I LIM
D:10	INVERSE TIME O/P
D:11	AT CURRENT LIMIT
D:12	AT ZERO SPEED
D:13	AT ZERO SETPOINT
D:14	AT STANDSTILL
D:15	STALL TRIP
D:16	RAMPING
D:17	PROGRAM STOP
D:18	DRIVE START
D:19	DRIVE ENABLE
D:20	OPERATING MODE
D:21	FIELD ENABLE
D:22	FIELD DEMAND
D:23	FIELD I FBK.
D:24	FLD. FIRING ANGLE
D:25	ANIN 1 (A2)
D:26	ANIN 2 (A3)
D:27	ANIN 3 (A4)
D:28	ANIN 4 (A5)
D:29	ANIN 5 (A6)
D:30	ANOUT 1 (A7)
D:31	ANOUT 2 (A8)
D:32	START (C3)
D:33	DIGITAL INPUT C4
D:34	DIGITAL INPUT C5
D:35	DIGIN 1 (C6)
D:36	DIGIN 2 (C7)
D:37	DIGIN 3 (C8)
D:38	DIGOUT 1 (B5)
D:39	DIGOUT 2 (B6)
D:40	DIGOUT 3 (B7)
D:41	RAISE/LOWER O/P
D:42	PID OUTPUT
D:43	PID CLAMPED
D:44	PID ERROR
D:45	SPT SUM 1 OUTPUT
D:46	RAMP OUTPUT
D:47	SPEED SETPOINT
D:48	TERMINAL VOLTS
D:49	BACK EMF
D:50	TACH INPUT (B2)
D:51	ENCODER

DIAGNOSTICS

This function block is used to monitor the status of the drive, internal variables, and its inputs and outputs.

The Parameter Descriptions table below describes the parameters contained in the DIAGNOSTICS function block.

The MMI DIAGNOSTICS Menu listing on the next page contains all the parameters in the DIAGNOSTICS menu. Each parameter is given a number, i.e. D:32, the thirty-second entry in the MMI DIAGNOSTICS menu - many of the functional diagrams in this chapter refer to diagnostics using this numbering system.

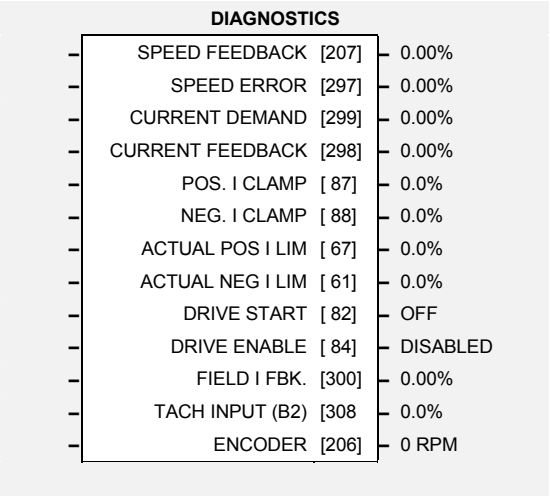

(Note the reference in brackets where each parameter appears in another function block.)

Parameter Descriptions

SPEED FEEDBACK *Range: -300.00% to 300.00%*

Speed loop feedback. *(Refer to SPEED LOOP, page 6-51)*

SPEED ERROR *Range: -300.00% to 300.00%*

Speed loop error. *(Refer to SPEED LOOP, page 6-51)*

CURRENT DEMAND *Range: -300.00% to 300.00%*

Current loop demand (speed error PI output or external current demand clamped by all the current limits). *(Refer to CURRENT LOOP, page 6-14)*

CURRENT FEEDBACK *Range: -300.00% to 300.00%*

Scaled and filtered armature current. *(Refer to CURRENT LOOP, page 6-14)*

POS. I CLAMP *Range: -200.0% to 200.0%*

Positive current clamp. *(Refer to CURRENT LOOP, page 6-14)*

NEG. I CLAMP *Range: -200.0% to 200.0%*

Negative current clamp. *(Refer to CURRENT LOOP, page 6-14)*

ACTUAL POS I LIM *Range: -200.0% to 200.0%*

Overall positive current limit value. *(DIAGNOSTIC only)*

ACTUAL NEG. I LIM *Range: -200.0% to 200.0%*

Overall negative current limit value. *(DIAGNOSTIC only)*

DRIVE START *Range: ON/OFF*

Controller start/run command. *(DIAGNOSTIC only)*

DRIVE ENABLE *Range: ENABLED/DISABLED*

Drive speed and current loop are enabled/quenched. *(DIAGNOSTIC only)*

FIELD I FBK. *Range: -300.00% to 300.00%*

Scaled field current feedback. *(Refer to CALIBRATION, page 6-11)*

TACH INPUT (B2) *Range: -300.00% to 300.00%*

Scaled analog tachogenerator feedback. *(Refer to CALIBRATION, page 6-11)*

ENCODER *Range: 0 RPM to 6000 RPM*

Encoder speed feedback in RPM. *(Refer to CALIBRATION, page 6-11)*

The MMI DIAGNOSTICS Menu

SPEED DEMAND	**Tag No. 89 - D:1**	**-105.00% to 105.00%**
Speed loop total setpoint after the ramp-to-zero block.		
	(Refer to STOP RATES, page 6-57)	
SPEED FEEDBACK	**Tag No. 207 - D:2**	**-300.00% to 300.00%**
Speed loop feedback.		
	(Refer to SPEED LOOP, page 6-51)	
SPEED ERROR	**Tag No. 297 - D:3**	**-300.00% to 300.00%**
Speed loop error.		
	(Refer to SPEED LOOP, page 6-51)	
CURRENT DEMAND	**Tag No. 299 - D:4**	**-300.00% to 300.00%**
Current loop demand (speed error PI output or external current demand clamped by all the current limits).		
	(Refer to CURRENT LOOP, page 6-14)	
CURRENT FEEDBACK	**Tag No. 298 - D:5**	**-300.00% to 300.00%**
Scaled and filtered armature current.		
	(Refer to CURRENT LOOP, page 6-14)	
POS I CLAMP	**Tag No. 87 - D:6**	**-200.00% to 200.00%**
Positive current clamp.		
	(Refer to CURRENT LOOP, page 6-14)	
NEG I CLAMP	**Tag No. 88 - D:7**	**-200.00% to 200.00%**
Negative current clamp.		
	(Refer to CURRENT LOOP, page 6-14)	
ACTUAL POS I LIM	**Tag No. 67 - D:8**	**-200.00% to 200.00%**
Overall positive current limit value.		
	(DIAGNOSTIC only)	
ACTUAL NEG I LIM	**Tag No. 61 - D:9**	**-200.00% to 200.00%**
Overall negative current limit value.		
	(DIAGNOSTIC only)	
INVERSE TIME O/P	**Tag No. 203 - D:10**	**0.00% to 200.00%**
Inverse time clamp output level.		
	(DIAGNOSTIC only)	
AT CURRENT LIMIT	**Tag No. 42 - D:11**	**TRUE/FALSE**
Current demand is being restrained by the overall current limit.		
	(Refer to CURRENT LOOP, page 6-14)	
AT ZERO SPEED	**Tag No. 77 - D:12**	**TRUE/FALSE**
At zero speed feedback.		
	(Refer to STANDSTILL, page 6-56)	
AT ZERO SETPOINT	**Tag No. 78 - D:13**	**TRUE/FALSE**
At zero speed demand.		
	(Refer to STANDSTILL, page 6-56)	
AT STANDSTILL	**Tag No. 79 - D:14**	**TRUE/FALSE**
AT ZERO SPEED and AT ZERO SETPOINT.		
	(Refer to STANDSTILL, page 6-56)	
STALL TRIP	**Tag No. 112 - D:15**	**OK/FAILED**
Armature current is above STALL THRESHOLD and AT ZERO SPEED but not AT ZERO SETPOINT.		
	(Refer to CALIBRATION, page 6-11)	
RAMPING	**Tag No. 113 - D:16**	**TRUE/FALSE**
If the difference between the ramp input and the ramp output is greater than the RAMP THRESHOLD, then RAMPING is TRUE.		
	(Refer to RAMPS, page 6-44)	

PROGRAM STOP	**Tag No. 80 - D:17**	**TRUE/FALSE**
State of program stop (Terminal B8). When B8 is at 24V, then PROGRAM STOP is FALSE and the program stop front panel LED is also ON.		
	(Refer to STOP RATES, page 6-57)	
DRIVE START	**Tag No. 82 - D:18**	**ON/OFF**
Controller start/run command.		
	(DIAGNOSTIC only)	
DRIVE ENABLE	**Tag No. 84 - D:19**	**ENABLED/DISABLED**
Drive speed and current loop are enabled/quenched.		
	(DIAGNOSTIC only)	
OPERATING MODE	**Tag No. 212 - D:20**	
Indicates whether the drive is in RUN, JOG 1....STOP etc.		
	(Refer to JOG/SLACK, page 6-32)	
FIELD ENABLE	**Tag No. 169 - D:21**	**ENABLED/DISABLED**
Drive field loop is enabled/quenched.		
	(Refer to FIELD CONTROL, page 6-27)	
FIELD DEMAND	**Tag No. 183 - D:22**	**0.00% to 100.00%**
Field current demand.		
	(Refer to FIELD CONTROL, page 6-27)	
FIELD I FBK	**Tag No. 300 - D:23**	**-300.00% to 300.00%**
Scaled field current feedback.		
	(Refer to CALIBRATION, page 6-11)	
FLD.FIRING ANGLE	**Tag No. 184 - D:24**	**0 DEG to 180 DEG**
Field firing angle in degrees: 155 degrees is the value for back stop (min field) and 5 degrees is the value for front stop (max field).		
	(Refer to FIELD CONTROL, page 6-27)	
ANIN 1 (A2)	**Tag No. 50 - D:25**	**-100.00 to 100.00 VOLTS**
Speed setpoint no. 1.		
	(Refer to ANALOG INPUTS, page 6-5)	
ANIN 2 (A3)	**Tag No. 51 - D:26**	**-100.00 to 100.00 VOLTS**
Speed setpoint no. 2/current demand.		
	(Refer to ANALOG INPUTS, page 6-5)	
ANIN 3 (A4)	**Tag No. 52 - D:27**	**-100.00 to 100.00 VOLTS**
Speed setpoint no. 3 (ramped).		
	(Refer to ANALOG INPUTS, page 6-5)	
ANIN 4 (A5)	**Tag No. 53 - D:28**	**-100.00 to 100.00 VOLTS**
Negative current clamp; this is only active if bipolar clamps are enabled (C6 = ON).		
	(Refer to ANALOG INPUTS, page 6-5)	
ANIN 5 (A6)	**Tag No. 54 - D:29**	**-100.00 to 100.00 VOLTS**
Main current limit or positive current clamp if C6 = ON.		
	(Refer to ANALOG INPUTS, page 6-5)	
ANOUT 1 (A7)	**Tag No. 55 - D:30**	**-100.00 to 100.00 VOLTS**
Scaled speed feedback.		
	(Refer to ANALOG OUTPUTS, page 6-7)	
ANOUT 2 (A8)	**Tag No. 56 - D:31**	**-100.00 to 100.00 VOLTS**
Total speed setpoint.		
	(Refer to ANALOG OUTPUTS, page 6-7)	
START (C3)	**Tag No. 68 - D:32**	**ON/OFF**
Start/Run terminal.		
	(Refer to AUX I/O, page 6-8)	
DIGITAL INPUT (C4)	**Tag No. 69 - D:33**	**ON/OFF**
Jog/Take-up Slack terminal.		
	(Refer to DIGITAL INPUTS, page 6-24 and AUX I/O, page 6-8)	

DIGITAL INPUT (C5)	**Tag No. 70 - D:34**	**ON/OFF**
Electronic enable/quench terminal (ON = Enabled).		
	(Refer to DIGITAL INPUTS, page 6-24 and AUX I/O, page 6-8)	
DIGIN 1 (C6)	**Tag No. 71 - D:35**	**ON/OFF**
Symmetrical current clamps/Asymmetrical (bipolar) current clamps (ON = Bipolar).		
	(Refer to DIGITAL INPUTS, page 6-24)	
DIGIN 2 (C7)	**Tag No. 72 - D:36**	**ON/OFF**
Ramp hold input (ON = Hold).		
	(Refer to DIGITAL INPUTS, page 6-24)	
DIGIN 3 (C8)	**Tag No. 73 - D:37**	**ON/OFF**
Current demand isolate; giving speed or current mode of operation. (ON = Current mode).		
	(Refer to DIGITAL INPUTS, page 6-24)	
DIGOUT 1 (B5)	**Tag No. 74 - D:38**	**ON/OFF**
At zero speed.		
	(Refer to DIGITAL OUTPUTS, page 6-26)	
DIGOUT 2 (B6)	**Tag No. 75 - D:39**	**ON/OFF**
Drive healthy. Health is also displayed on the front panel LED, always ON when the start is low.		
	(Refer to DIGITAL OUTPUTS, page 6-26)	
DIGOUT 3 (B7)	**Tag No. 76 - D:40**	**ON/OFF**
Drive ready to run (all alarms healthy and mains synchronisation achieved)		
	(Refer to DIGITAL OUTPUTS, page 6-26)	
RAISE/LOWER O/P	**Tag No. 264 - D:41**	**-300.00% to 300.00%**
(OUTPUT) Value of the raise/lower ramp function.		
	(Refer to RAISE/LOWER, page 6-42)	
PID OUTPUT	**Tag No. 417 - D:42**	**-315.00% to 315.00%**
PID block output.		
	(Refer to PID, page 6-39)	
PID CLAMPED	**Tag No. 416 - D:43**	**TRUE/FALSE**
Logic output indicating whether the PID limits are active.		
	(Refer to PID, page 6-39)	
PID ERROR	**Tag No. 415 - D:44**	**-105.00% to 105.00%**
PID error = Input 1 - Input 2		
	(Refer to PID, page 6-39)	
SPT SUM 1 OUTPUT	**Tag No. 86 - D:45**	**-200.00% to 200.00%**
Setpoint sum 1 output.		
	(Refer to SETPOINT SUM 1, page 6-48)	
RAMP OUTPUT	**Tag No. 85 - D:46**	**-100.00% to 100.00%**
Setpoint ramp output.		
	(Refer to RAMPS, page 6-44)	
SPEED SETPOINT	**Tag No. 63 - D:47**	**-300.00% to 300.00%**
Speed loop total setpoint including the ramp output before the ramp-to-zero function.		
	(Refer to SPEED LOOP, page 6-51)	
TERMINAL VOLTS	**Tag No. 57 - D:48**	**-125.00% to 125.00%**
Scaled terminal volts.		
	(Refer to CALIBRATION, page 6-11)	
BACK EMF	**Tag No. 60 - D:49**	**-150.00% to 150.00%**
Calculated motor back EMF including IR. compensation.		
	(Refer to CALIBRATION, page 6-11)	
TACH INPUT (B2)	**Tag No. 308 - D:50**	**-300.00% to 300.00%**
Scaled analog tachogenerator feedback.		
	(Refer to CALIBRATION, page 6-11)	
ENCODER	**Tag No. 206 - D:51**	**0 RPM to 6000 RPM**
Encoder speed feedback in RPM.		
	(Refer to CALIBRATION, page 6-11)	

DIAMETER CALC.

MMI Menu Map

1 SETUP PARAMETERS
2 SPECIAL BLOCKS
3 DIAMETER CALC.
- LINE SPEED
- REEL SPEED
- MIN DIAMETER
- MIN SPEED
- RESET VALUE
- EXTERNAL RESET
- RAMP RATE
- DIAMETER

This block calculates the diameter of a reel as a function of the reel speed and the line speed.

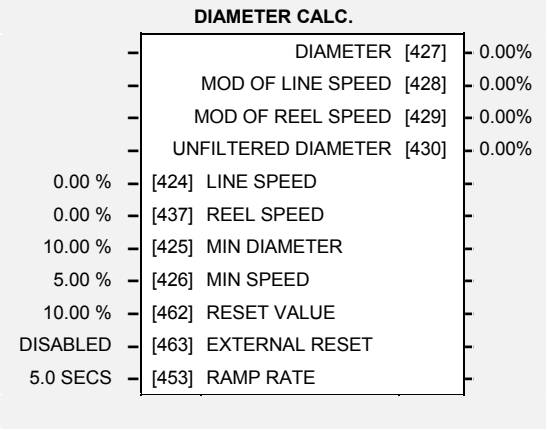

Parameter Descriptions

LINE SPEED *Range: -105.00 to 105.00 %*

This will usually be configured to be the analog tacho input and scaled appropriately during calibration.

REEL SPEED *Range: -105.00 to 105.00 %*

This will usually be configured to be the drive's own speed feedback, i.e. encoder or arm.volts feedback

MIN DIAMETER *Range: 0.00 to 100.00 %*

This is normally the empty core diameter.

MIN SPEED *Range: 0.00 to 100.00 %*

This is the minimum LINE SPEED level below which the diameter calculation is frozen.

RESET VALUE *Range: 0.00 to 100.00 %*

Normally for winders this will be set to the MIN DIAMETER value. This value will be preloaded into the ramp (filter) output when EXTERNAL RESET is enabled.

EXTERNAL RESET *Range: ENABLED/DISABLED*

Whilst this input is being enabled the ramp is held at the RESET VALUE.

RAMP RATE *Range: 0.1 to 600.0 SECS*

This is used to filter the output of the diameter calculator.

DIAMETER *Range: 0.00 to 100.00 %*

This is the output of the block and it can be connected to the appropriate points in the winder block.

MOD OF LINE SPEED

Reserved parameter for use by Parker SSD Drives.

MOD OF REEL SPEED

Reserved parameter for use by Parker SSD Drives.

UNFILTERED DIAMETER

Reserved parameter for use by Parker SSD Drives.

Functional Description

DIAMETER CALC.

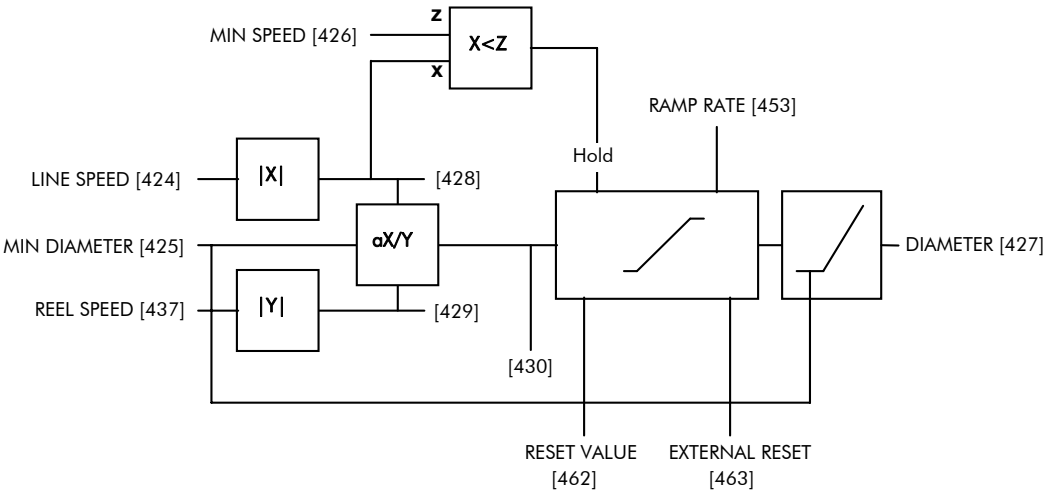

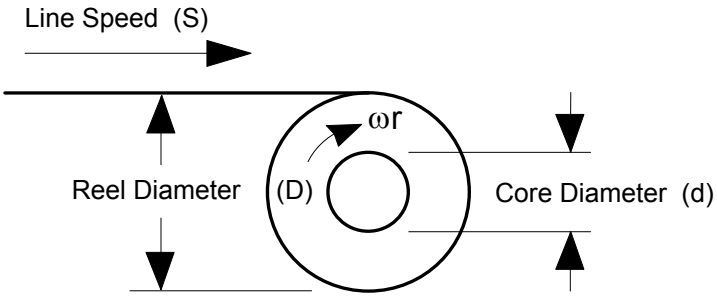

Circumference = πD or Line Speed (S) = Reel Speed (ωr) x D

Thus $D = \dfrac{S}{\omega r}$

i.e. $D \propto \dfrac{\text{Line Speed (S)}}{\text{Reel Speed } (\omega r)}$

Therefore with the web intact we can calculate the diameter from the two speeds

DIGITAL INPUTS

MMI Menu Map

1 SYSTEM
2 CONFIGURE I/O
3 DIGITAL INPUTS
4 DIGIN 1 (C6)
4 DIGIN 2 (C7)
4 DIGIN 3 (C8)
- VALUE FOR TRUE
- VALUE FOR FALSE
- DESTINATION TAG

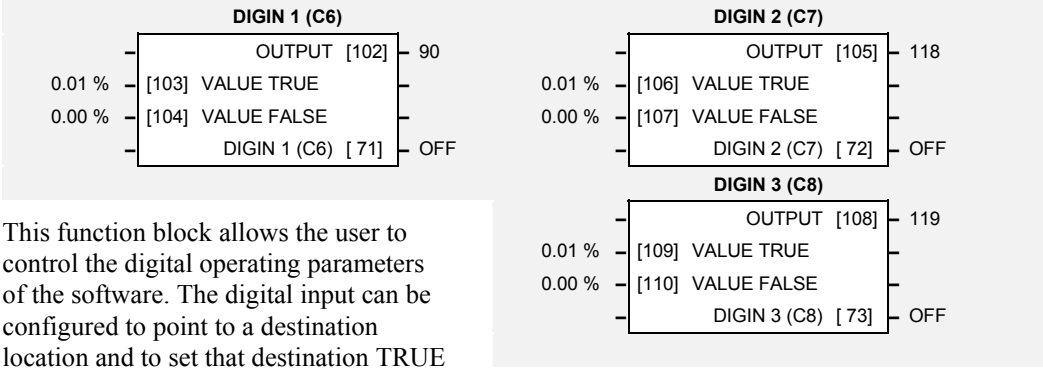

This function block allows the user to control the digital operating parameters of the software. The digital input can be configured to point to a destination location and to set that destination TRUE or FALSE depending upon programmable values.

MMI Menu Map

1 SYSTEM
2 CONFIGURE I/O
3 DIGITAL INPUTS
4 DIGITAL INPUT C4
4 DIGITAL INPUT C5
- DESTINATION TAG

Parameter Descriptions

VALUE TRUE *Range: -300.00 % to 300.00%*

The value that OUTPUT assumes when input is TRUE.

VALUE FALSE *Range: -300.00% to 300.00%*

The value that OUTPUT assumes when input is FALSE.

DIGIN 1 (C6) to DIGIN 3 (C8)

Refer to the DIAGNOSTICS function block description, page 6-18.

OUTPUT *Range: 0 to 499*

(DESTINATION TAG)
The destination Tag No. of the assumed value.

Functional Description

The destination for a digital input can be any valid Tag No, this means that a digital input can be used to select one of two values for a given parameter. It is also possible to treat the values for TRUE and FALSE as destination tags from other functions or inputs.

With regard to destinations expecting logic parameters, 0.00% is regarded as Logic 0 and any other value is regarded as Logic 1. This refers to the values set in both VALUE TRUE and VALUE FALSE.

Inverting the digital input is therefore simple; set VALUE TRUE to 0.00% and VALUE FALSE to 0.01% or any other non-zero number.

Configurable Digital Inputs

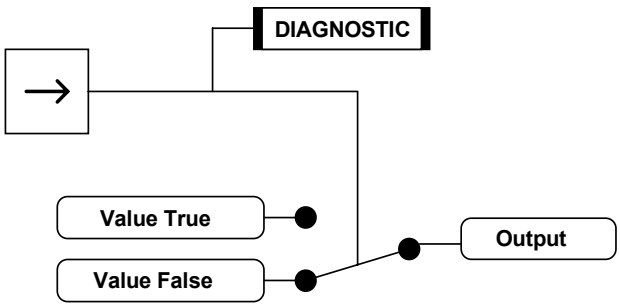

Additional Inputs

It is possible to use an Analog Input as a Digital Input to extend the number of Digital Inputs available. Again, 0.00% is regarded as Logic 0 and any other value is regarded as Logic 1.

Using Analog I/P as Digital I/P

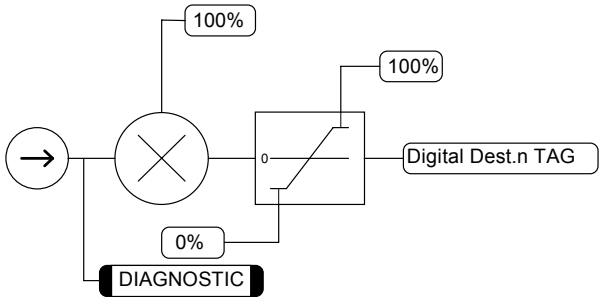

DIGITAL INPUT C4 and DIGITAL INPUT C5

Digital Inputs C4 and C5 have DESTINATION TAGs only. They do not support VALUE TRUE and VALUE FALSE, (VALUE TRUE is fixed at 0.01%, and VALUE FALSE is fixed at 0.00%).

DIGITAL INPUT C4

Refer to the DIAGNOSTICS function block description, page 6-18.

Only the OUTPUT (DESTINATION TAG) parameter of this digital input can be configured. By default it is set to 496, which is the Tag No. for JOG/SLACK in the AUX I/O function block.

DESTINATION TAG

Destination of DIGITAL INPUT C4
Range: 0 to 499
Default: 496
TAG N°: 494

DIGITAL INPUT C5

Refer to the DIAGNOSTICS function block description, page 6-18.

Only the OUTPUT (DESTINATION TAG) parameter of this digital input can be configured. By default it is set to 497, which is the Tag No. for ENABLE in the AUX I/O function block.

DESTINATION TAG

Destination of DIGITAL INPUT C5
Range: 0 to 499
Default: 497
TAG N°: 495

If terminal C5 is used for anything other than "drive enable", i.e. DESTINATION TAG (Tag No. 495) is *not* set to 497, then the ENABLE parameter, Tag No. 497, must be set to ON, otherwise the drive will not run.

DIGITAL OUTPUTS

MMI Menu Map

1 SYSTEM
2 CONFIGURE I/O
3 DIGITAL OUTPUTS
4 DIGOUT 1 (B5)
4 DIGOUT 2 (B6)
4 DIGOUT 3 (B7)
- THRESHOLD (>)
- MODULUS
- SOURCE TAG
- INVERTED

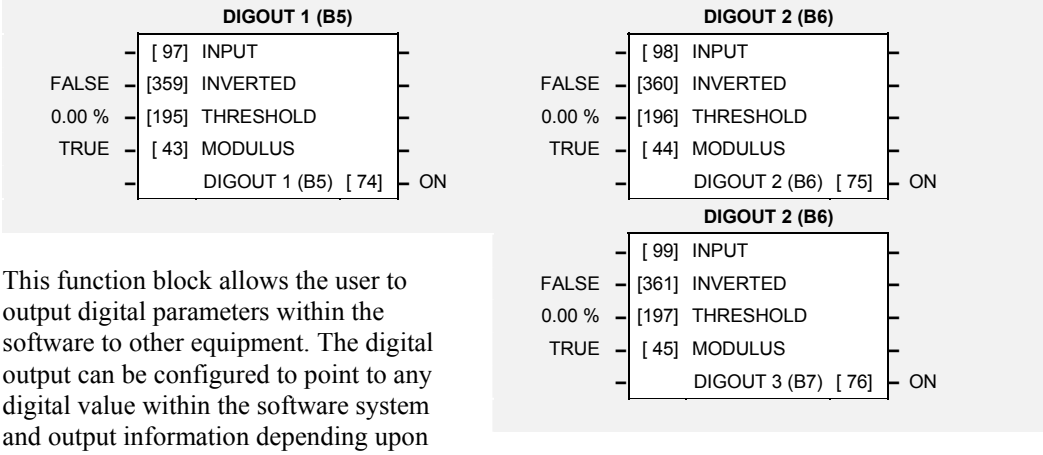

This function block allows the user to output digital parameters within the software to other equipment. The digital output can be configured to point to any digital value within the software system and output information depending upon the status of that value.

Parameter Descriptions

INPUT *Range: 0 to 499*

(SOURCE TAG) Defines the source of the variable to control the digital output.

INVERTED *Range: TRUE/FALSE*

Selects inverted output

THRESHOLD *Range: -300.00% to 300.00%*

The threshold which the value must exceed to set the output to TRUE.

MODULUS *Range: TRUE/FALSE*

Output set TRUE for absolute or modulus of the Tag No. value.

DIGOUT 1 (B5) to DIGOUT 3 (B7)

Refer to the DIAGNOSTICS function block description, page 6-18.

Functional Description

Configurable Digital Outputs

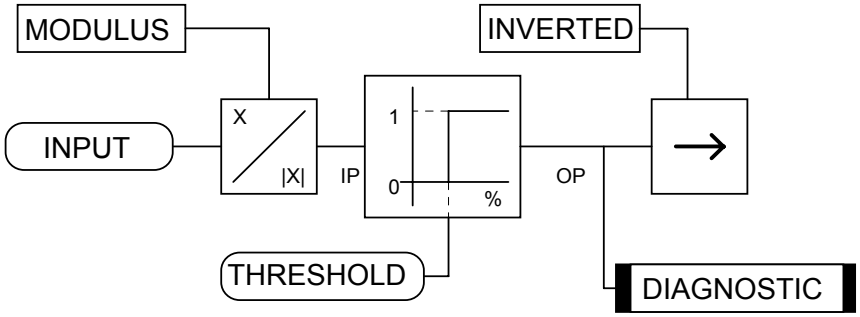

FIELD CONTROL

MMI Menu Map

1 SETUP PARAMETERS
2 FIELD CONTROL
- FIELD ENABLE
- FLD CTRL MODE IS

This function block contains all the parameters for the field operating mode. It is viewed in three separate menus on the MMI.

In the FIELD CONTROL menu, you select the field operating mode: open loop voltage control or closed loop current control.

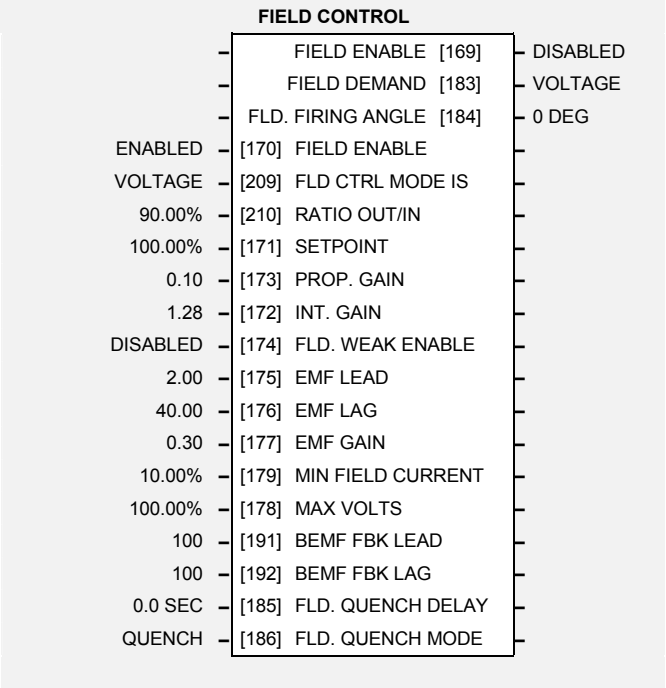

FLD VOLTAGE VARS

MMI Menu Map

1 SETUP PARAMETERS
2 FIELD CONTROL
3 FLD VOLTAGE VARS
- RATIO OUT/IN
- SETPOINT
- PROP. GAIN
- INT. GAIN

Contains the parameters for the open loop voltage control mode.

FLD WEAK VARS

MMI Menu Map

1 SETUP PARAMETERS
2 FIELD CONTROL
3 FLD WEAK VARS
- FLD. WEAK ENABLE
- EMF LEAD
- EMF LAG
- EMF GAIN
- MIN FLD CURRENT
- MAX VOLTS
- BEMF FBK LEAD
- BEMF FBK LAG
- FLD QUENCH DELAY
- FLD. QUENCH MODE

Contains the parameters for the closed loop current control mode.

In certain applications of a DC motor controller, high speeds can only be achieved by reducing the field current and therefore the resultant torque. This is termed as the Constant-Horsepower region or Field-Weakening region, and the speed at which it begins is known as the Base Speed.

Parameter Descriptions

FIELD ENABLE *Range: ENABLED/DISABLED*

Unquenches field current loop.

FLD CTRL MODE IS *Range: VOLTAGE CONTROL/ CURRENT CONTROL*

There are two field control modes:

(a) Field Voltage Control is an open loop phase angle control to give a certain voltage output.

(b) Field Current Control is a closed loop current control for accurate field control or expansion to field weakening.

RATIO OUT/IN *Range: 0.00 to 100.00 %*

This parameter controls the output voltage from the open loop voltage control. The ratio is defined as the DC output voltage over the AC RMS input voltage.

The default setting is equivalent to a single-phase diode rectifier.

SETPOINT *Range: 0.00 to 100.00 %*

Field current setpoint.

PROP. GAIN *Range: 0.00 to 100.00*

This is the proportional gain adjustment of the field current PI loop. The default of 0.10 is equivalent to a real gain of 10.

INT. GAIN *Range: 0.00 to 100.00*

This is the integral gain adjustment of the field current PI loop.

FLD. WEAK ENABLE *Range: ENABLED/DISABLED*

Activates the additional motor back emf PID loop for field weakening (field spillover) control.

EMF LEAD *Range: 0.10 to 50.00*

With field weakening control enabled, a PID loop is brought into operation. This is the lead time constant adjustment of the field weakening PID loop.
With a default of 2.00, real time constant = 200ms.

EMF LAG *Range: 0.00 to 200.00*

This is the lag time constant adjustment of the field weakening PID loop
With a default of 4.00, real time constant = 4000ms.

EMF GAIN *Range: 0.00 to 100.00*

This is the gain adjustment of the field weakening PID loop.
With a default of 3.00, real gain = 30.

MIN FLD CURRENT *Range: 0.00 to 100.00 %*

The field weakening loop reduces the field current to achieve speed control above base speed. At top speed the field reaches a minimum value. The Min Fld Current should be set below this minimum value to allow reasonable margin for transient control near the top speed but not lower than 6% as this could then cause the "Field Fail" alarm to operate.

MAX VOLTS *Range: 0.00 to 100.00 %*

Maximum volts is the voltage level at which field weakening begins. It is also known as "Spillover Bias". The default value is 100% of the nominal value as set by the armature voltage calibration value. For commissioning purposes this value can be set to another (lower) desirable level. Subsequently, it is advisable to return it to 100% for normalisation.

BEMF FBK LEAD *Range: 10 to 5000 (ms)*

This is the lead time constant of the back emf feedback filter which is used for reducing armature voltage overshoots when accelerating fast through base speed.

BEMF FBK LAG *Range: 10 to 5000 (ms)*

This is the lag time constant of the above feedback filter. If the filter is active, the ratio of lead / lag should always be greater than 1 to give an overall lead action which reduces the voltage overshoot and less than, typically, 3 for stable control. The default values 100/100 = 1 cancel each other and make the filter inactive.

FLD QUENCH DELAY *Range: 0.00 to 600.00 SECS*

If dynamic breaking is used the field must be maintained for a period after the drive is disabled. The field quench delay is the period of time which the field is maintained for.

FLD. QUENCH MODE *Range: QUENCH/STANDBY*

After the field quench delay has expired, the field can be entirely quenched or put into a standby mode at 50% of rated current or volts depending whether in current or voltage control mode respectively. (The default standby value of 50% can be modified through the "SYSTEM / Reserved" Menu which is primarily for factory use only and requires the “super” password.)

FIELD ENABLE

Refer to the DIAGNOSTICS function block description, page 6-18.

FIELD DEMAND

Refer to the DIAGNOSTICS function block description, page 6-18.

FLD. FIRING ANGLE

Refer to the DIAGNOSTICS function block description, page 6-18.

FIELD CONTROL

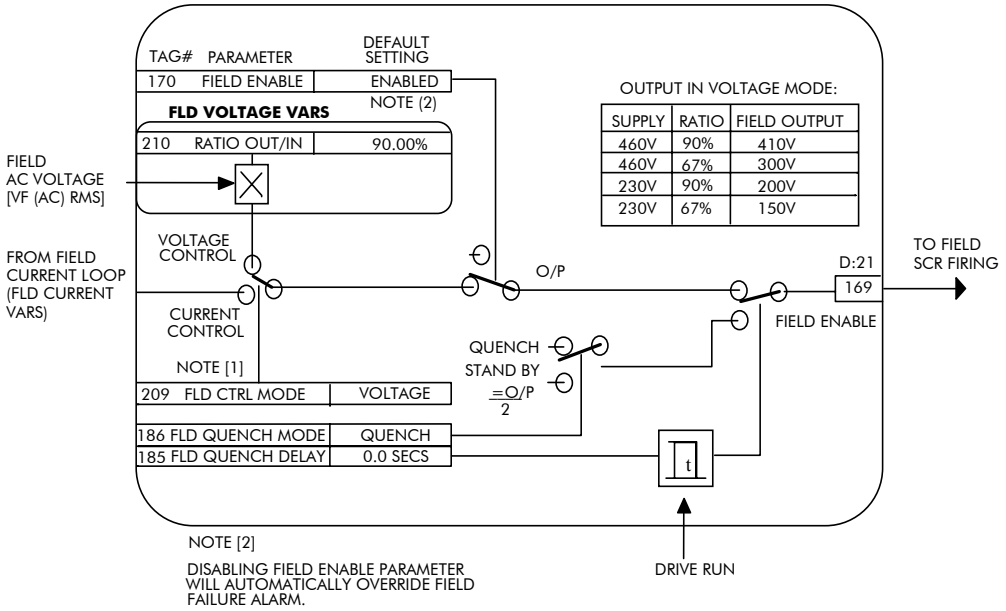

FLD CURRENT VARS

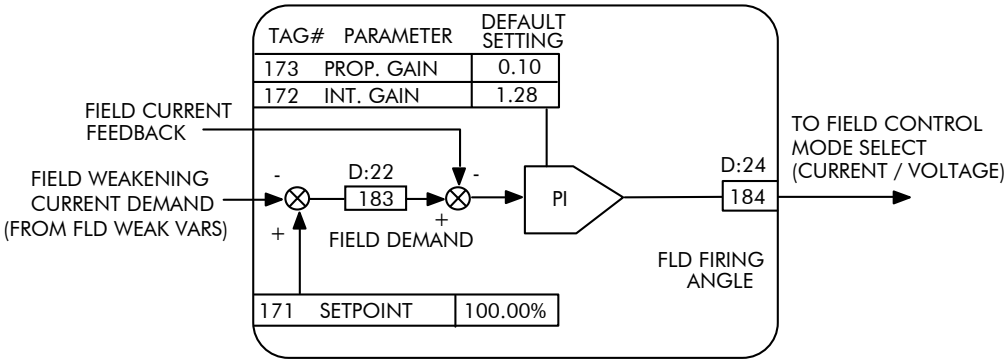

FLD WEAK VARS

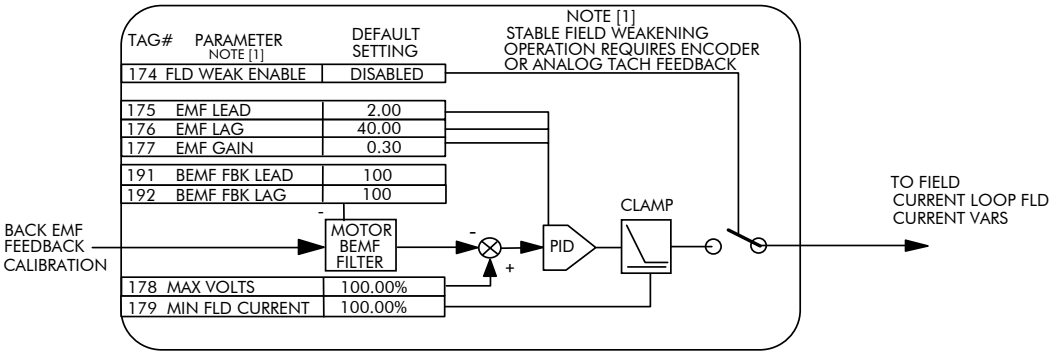

INHIBIT ALARMS

MMI Menu Map

1 SETUP PARAMETERS

2 INHIBIT ALARMS
- FIELD FAIL
- 5703 RCV ERROR
- STALL TRIP
- TRIP RESET
- SPEED FBK ALARM
- ENCODER ALARM

This function block provides a view into the current and past trip conditions, and allows some trips to be disabled.

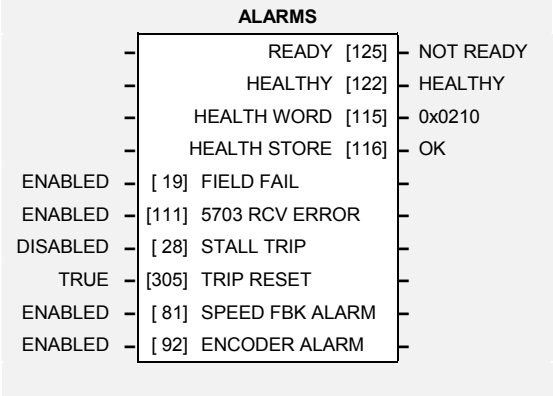

Parameter Descriptions

FIELD FAIL
Range: ENABLED/INHIBITED

Inhibits the field fail alarm.

5703 RCV ERROR
Range: ENABLED/INHIBITED

Inhibits 5703 serial communications receive error. Only active in Slave Mode.

STALL TRIP
Range: ENABLED/INHIBITED

Inhibits the stall trip alarm from tripping the contactor out.

TRIP RESET
Range: TRUE/FALSE

When this is FALSE the faults are latched permanently and the HEALTHY output remains inactive after toggling the Start input (C3) off/on. The Trip Reset must then be set to TRUE for the faults to be reset and the HEALTHY output to go active (high) when C3 goes low. This feature can be used in applications where you want to reset the faults under your own control, rather than automatically with the Start/Run command.

SPEED FBK ALARM
Range: ENABLED/INHIBITED

Inhibits the speed feedback alarm.

ENCODER ALARM
Range: ENABLED/INHIBITED

Inhibits the encoder option board alarm.

READY

Reserved parameter for use by Parker SSD Drives.

HEALTHY

Reserved parameter for use by Parker SSD Drives.

HEALTH WORD
Range: 0000 to FFFF

The hexadecimal sum of any alarms present. Refer to Chapter 7: “Trips and Fault Finding” - Alarm Messages.

HEALTH STORE
Range: 0000 to FFFF

The hexadecimal value of the first (or only) alarm. Refer to Chapter 7: “Trips and Fault Finding” - Alarm Messages.

Functional Description

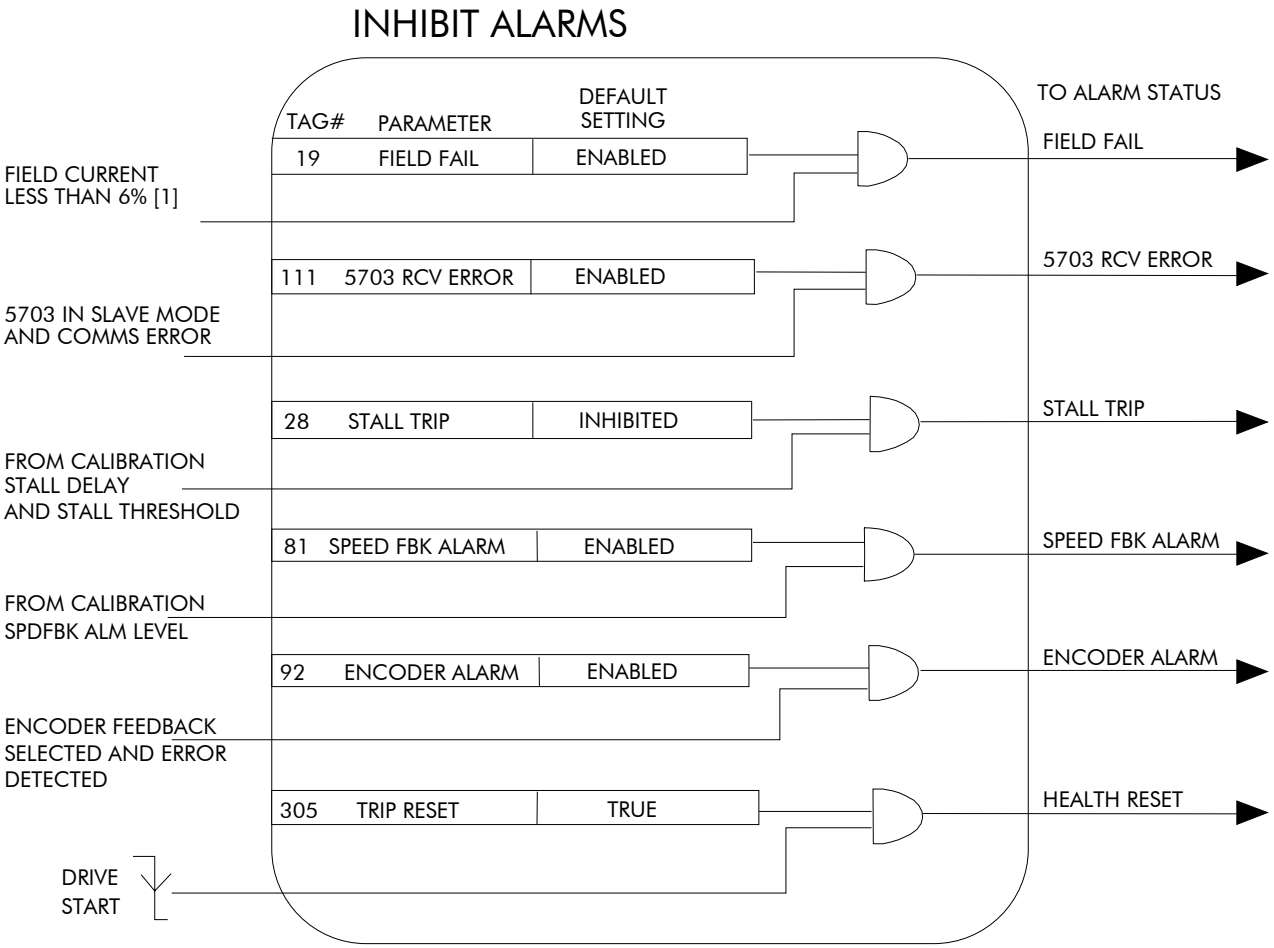

NOTE [1]:

FIELD FAIL THRESHOLD IS 6% IN CURRENT CONTROL
12% IN VOLTAGE CONTROL

JOG/SLACK

MMI Menu Map

1 SETUP PARAMETERS

2 JOG SLACK

- JOG SPEED 1
- JOG SPEED 2
- TAKE UP 1
- TAKE UP 2
- CRAWL SPEED
- MODE
- RAMP RATE

This block holds all the parameters that concern the Jog functionality on the converter.

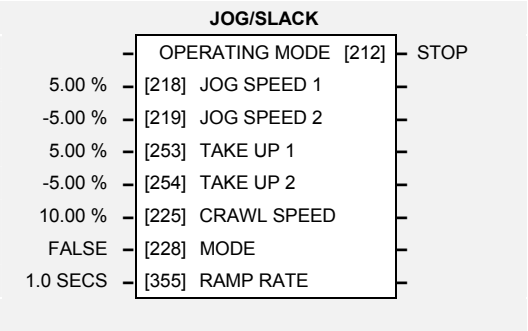

Parameter Descriptions

JOG SPEED 1 *Range: -100.00 to 100.00 %*

Jog speed 1 setpoint.

JOG SPEED 2 *Range: -100.00 to 100.00 %*

Jog speed 2 setpoint.

TAKE UP 1 *Range: -100.00 to 100.00 %*

Take-up slack speed setpoint 1.

TAKE UP 2 *Range: -100.00 to 100.00 %*

Take-up slack speed setpoint 2.

CRAWL SPEED *Range: -100.00 to 100.00 %*

Crawl speed setpoint.

MODE *Range: TRUE/FALSE*

Jog/Slack operating mode select. To use the full block functionality, MODE must be connected to a digital input.

RAMP RATE *Range: 0.1 to 600.0 SECS*

The ramp rate used while jogging is independent of the main ramp rate during normal running. The acceleration and deceleration times in jog are always equal.

OPERATING MODE

Refer to the DIAGNOSTICS function block description, page 6-18.

Functional Description

To fully make use of all the modes of operation the MODE select input (Tag No. 228) must be connected to a free digital input.

Note: *The setpoint column in the table below refers to the Ramp Input ONLY as indicated in the relevant column of the table. Any direct setpoints present will also add to this setpoint to make the total speed setpoint. If this is not desirable, as for example during jogging, then the direct setpoints should be disconnected during the appropriate conditions.*

Operating Mode	Mode Tag No 228	Start C3	Jog C4	Ramp Input	Ramp Time	Contactor
Stop	False	OFF	OFF	Setpoint	Default	OFF
Stop	True	OFF	OFF	Setpoint	Default	OFF
Run	False	ON	OFF	Setpoint	Default	ON
Take-Up Slack 1	False	ON	ON	Setpoint + Take-Up Slack 1	Default	ON
Take-Up Slack 2	True	ON	OFF	Setpoint + Take-Up Slack 2	Default	ON

Operating Mode	Mode Tag No 228	Start C3	Jog C4	Ramp Input	Ramp Time	Contactor
Inch / Jog 1	False	OFF	ON	Jog Speed 1	Jog Ramp Rate	ON
Inch / Jog 2	True	OFF	ON	Jog Speed 2	Jog Ramp Rate	ON
Crawl	True	ON	ON	Crawl Speed	Default	ON

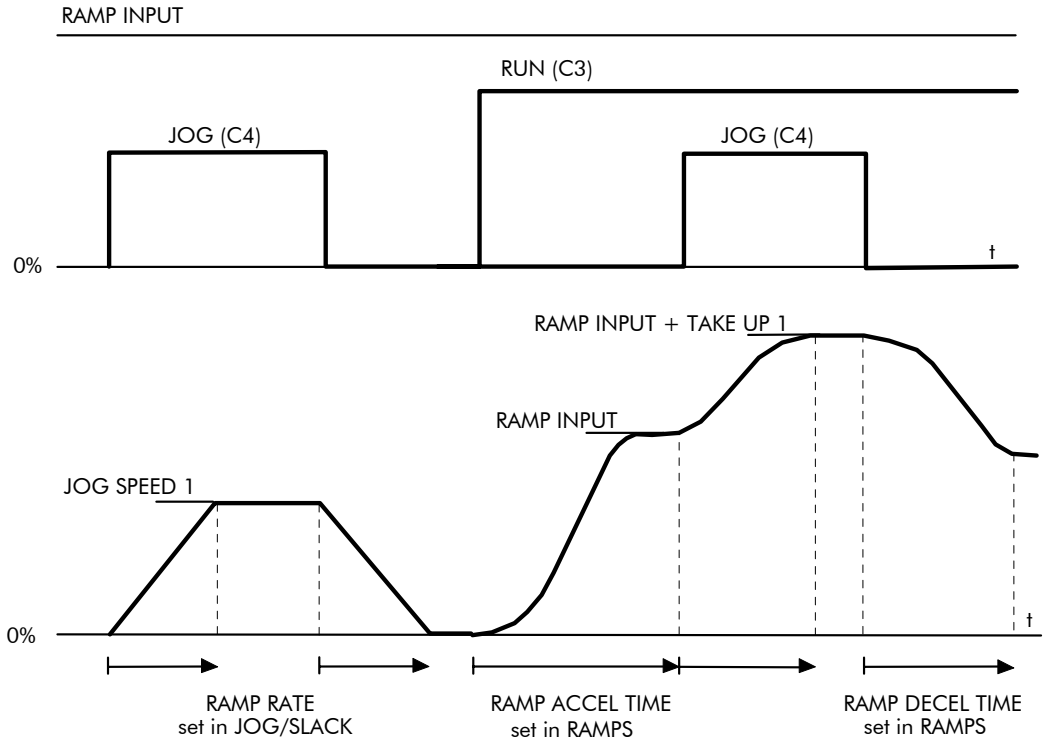

Block Diagram

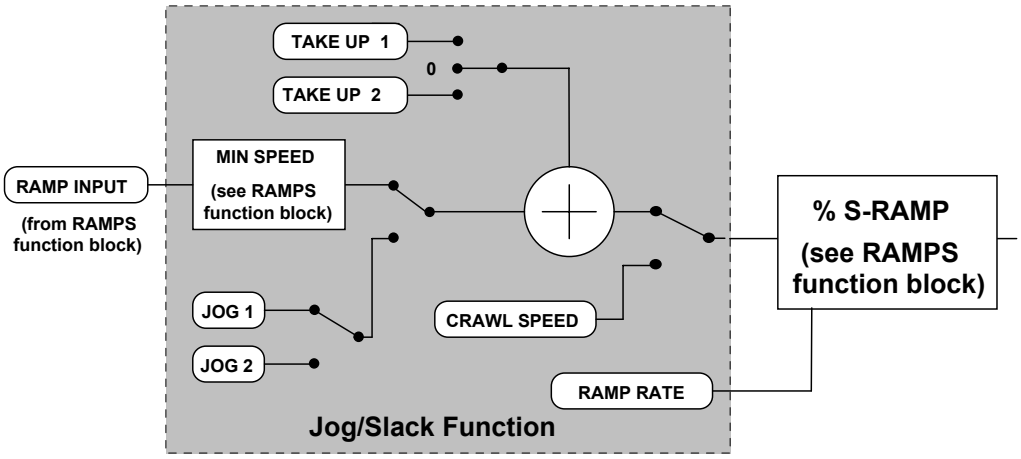

LINK 11 & LINK 12

MMI Menu Map

1 SYSTEM
2 CONFIGURE I/O
3 INTERNAL LINKS
4 LINK 11
4 LINK 12
- SOURCE TAG
- DESTINATION TAG
- ADVANCED
- MODE
- AUX. SOURCE

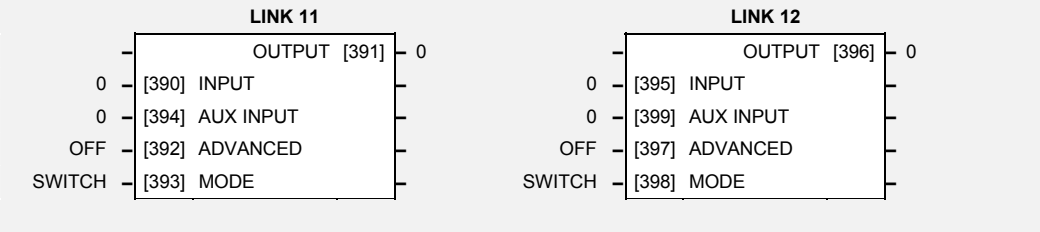

Links 11 and 12 allow further functionality within the block diagram. The following diagram shows the internal schematic for an advanced link.

Parameter Descriptions

INPUT *Range: 0 to 499*
(SOURCE TAG)

AUX INPUT *Range: 0 to 499*
(AUX. SOURCE)

Provides the second input for the two-input functions of the MODE selection.

ADVANCED *Range: OFF/ON*
When OFF it makes the extended link appear as a standard link, i.e. it copies INPUT to OUTPUT. When ON it extends the link's functionality according to the MODE selected (see below).

MODE *Range: See below*
This determines which operation is performed on the INPUT (and sometimes also the AUX INPUT) before copying the result into the OUTPUT. It can be combined with ADVANCED to dynamically **switch** the OUTPUT between two inputs (INPUT and AUX INPUT). The functionality of the various MODE selections are shown in the table.

COMPARATOR
MODULUS
SIGN CHANGER
OR
AND
INVERTER
SWITCH

OUTPUT *Range: 0 to 499*
(DESTINATION TAG)

Functional Description

Link 11 & Link 12

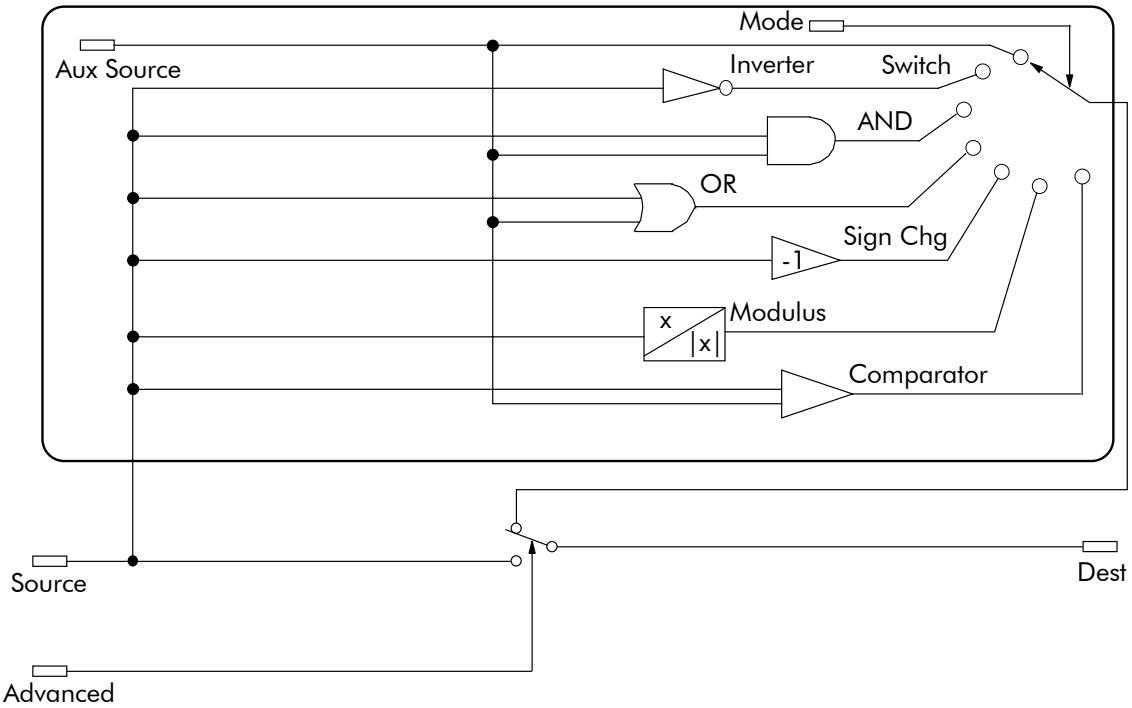

Mode	Description		
SWITCH	If ADVANCED = OFF If ADVANCED = ON	DESTINATION = SOURCE DESTINATION = AUX SOURCE	
INVERTER	If ADVANCED = OFF If ADVANCED = ON	DESTINATION = SOURCE DESTINATION = Logic Inversion of SOURCE	
AND	If ADVANCED = OFF If ADVANCED = ON	DESTINATION = SOURCE DESTINATION = SOURCE AND AUX SOURCE	
OR	If ADVANCED = OFF If ADVANCED = ON	DESTINATION = SOURCE DESTINATION = SOURCE OR AUX SOURCE	
SIGN CHANGER	If ADVANCED = OFF If ADVANCED = ON	DESTINATION = SOURCE DESTINATION = Value sign change of SOURCE	
MODULUS	If ADVANCED = OFF If ADVANCED = ON	DESTINATION = SOURCE DESTINATION = Modulus of SOURCE	
COMPARATOR	If ADVANCED = OFF If ADVANCED = ON	DESTINATION = SOURCE If SOURCE < AUX SOURCE If SOURCE > AUX SOURCE	 DESTINATION = 0 DESTINATION = 1

MMI Menu Map

1 SERIAL LINKS

2 MAIN PORT P1

- SRL LINK ENABLE
- GROUP ID (GID)
- UNIT ID (UID)
- PROTOCOL
- BAUD RATE
- ESP SUP. (ASCII)
- CHANGEBAND (BIN)
- ERROR REPORT
- PNO.7
- OPTION ADDRESS
- OPTION VERSION
- PARITY

MAIN PORT P1

This function block configures the Converter to use the plug-in COMMS Option Board.

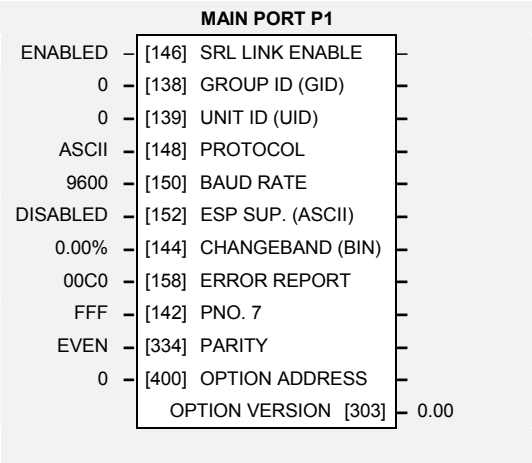

Parameter Descriptions

SRL LINK ENABLE *Range: ENABLED/DISABLED*

Enables port operation.

GROUP ID (GID) *Range: 0 to 7*

The Parker SSD Drive's protocol group identity address.

UNIT ID (UID) *Range: 0 to 15*

The Parker SSD Drive's protocol unit identity address.

PROTOCOL *Range: See below*

Selects the protocol to be used. The selections are:

ASCII
BINARY
OPTION (select OPTION if say a Profibus option is fitted)

BAUD RATE *Range: See below*

Selects the Baud Rate.

300
600
1200
2400
4800
9600 (default)
19200

ESP SUP. (ASCII) *Range: ENABLED/DISABLED*

Enable if communicating with a unit using Parker SSD Drives' own ESP protocol.

CHANGEBAND (BIN) *Range: 0.00% to 327.67%*

Percentage change in value to trigger a BINARY Enquiry Poll update.

ERROR REPORT *Range: 0000 to FFFF*

Displays the last error as a hexadecimal code. Writing any value to this parameter will set the value to >00C0 (No Error). Refer to Chapter 14: “Serial Communications” for a list of codes.

PNO. 7 *Range: 0000 to FFFF*

Control word for Multi-Parameter Polling (refer to the COMMS Option Board Technical Manual - Parameter Specification Tables).

PARITY *Range: ODD/EVEN*

Selects odd or oven parity.

OPTION ADDRESS

Reserved parameter for use by Parker SSD Drives.

OPTION VERSION

Reserved parameter for use by Parker SSD Drives.

MMI Menu Map

1 MENUS
- FULL MENUS
- MENU DELAY
- LANGUAGE

MENUS

This function block allows selection of either the full menu structure, or a reduced menu structure for easier navigation of the menu. It also selects the display language for the MMI.

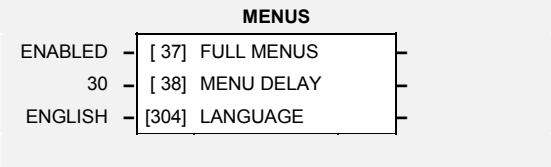

Parameter Descriptions

FULL MENUS *Range: ENABLED/DISABLED*

When enabled, the full MMI menu structure is displayed on the MMI.

MENU DELAY *Range: 0 to 65535*

This setting affects the speed at which the menu is stepped through when an MMI key (↑,↓,M,E) is pressed or held down. Increasing the value slows the menu.

LANGUAGE *Range: ENGLISH/FRENCH*

Selects the MMI display language.

miniLINK

This function block is no longer supported.

MMI Menu Map

1 SYSTEM

2 miniLINK

- VALUE 1
- VALUE 2
- VALUE 3
- VALUE 4
- VALUE 5
- VALUE 6
- VALUE 7
- VALUE 8
- VALUE 9
- VALUE 10
- VALUE 11
- VALUE 12
- VALUE 13
- VALUE 14
- LOGIC 1
- LOGIC 2
- LOGIC 3
- LOGIC 4
- LOGIC 5
- LOGIC 6
- LOGIC 7
- LOGIC 8

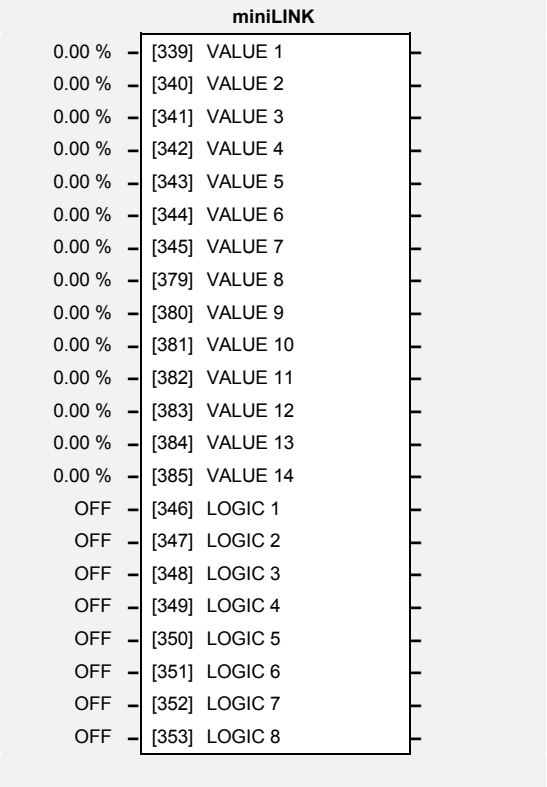

Parameter Descriptions

VALUE 1 to VALUE 14 *Range: -300.00% to 300.00%*

LOGIC 1 to LOGIC 8 *Range: OFF/ON*

PID

MMI Menu Map

1 SETUP PARAMETERS
2 SPECIAL BLOCKS
3 PID
- PROP. GAIN
- INT. TIME CONST.
- DERIVATIVE TC
- POSITIVE LIMIT
- NEGATIVE LIMIT
- O/P SCALER (TRIM)
- INPUT 1
- INPUT 2
- RATIO 1
- RATIO 2
- DIVIDER 1
- DIVIDER 2
- ENABLE
- INT. DEFEAT
- FILTER T.C.
- MODE
- MIN PROFILE GAIN
- PROFILED GAIN

This is a general purpose PID block which can be used for many different closed loop control applications. The PID feedback can be loadcell tension, dancer position or any other transducer feedback such as pressure, flow etc.

Features:

- Independent adjustment of gain and time constants.
- Additional first-order filter (F).
- Functions P, PI, PD, PID with/without F individually selected.
- Ratio and divider for scaling each input.
- Independent positive and negative limits.
- Output scaler (Trim).
- Gain profiled by diameter for centre-driven winder control.

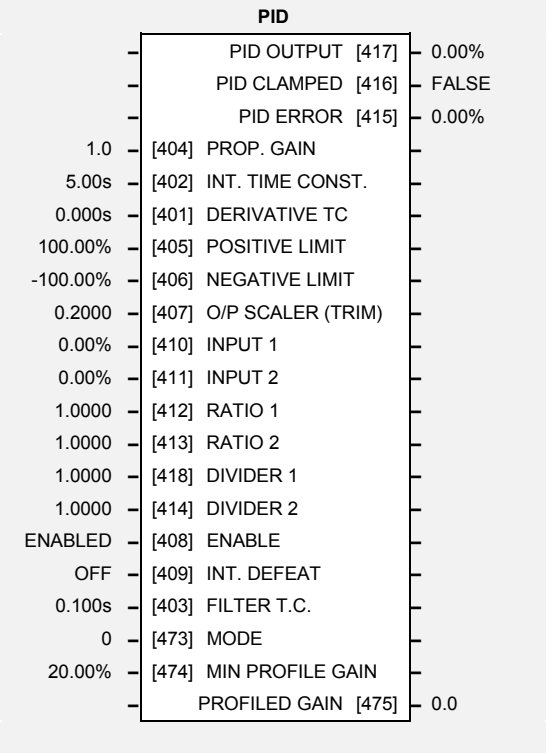

Parameter Descriptions

PROP. GAIN *Range: 0.0 to 100.0*

This is a pure gain factor which shifts up or down the whole Bode PID transfer function leaving the time constants unaffected. A value of P = 10.0 means that, for an error of 5%, the proportional part (initial step) of the PID output will be:
10 x [1 + (Td/Ti)] x 5 % , i.e. approx. 50% for Td << Ti.

INT. TIME CONST. *Range: 1.000s to 10.000s*

The integrator time constant (Ti)

DERIVATIVE TC *Range: 0.000s to 10.000s*

The differentiator time constant (Td). When Td = 0 the transfer function of the block becomes a P+I.

POSITIVE LIMIT *Range: 0.00% to 105.00%*

The upper limit of the PID algorithm.

NEGATIVE LIMIT *Range: -105.00% to 0.00%*

The lower limit of the PID algorithm.

O/P SCALER (TRIM) *Range: -3.0000 to 3.0000*

The ratio which the limited PID output is multiplied by in order to give the final PID Output. Normally this ratio would be between 0 and 1.

INPUT 1 *Range: -300.00% to 300.00%*

This can be either a position/tension feedback or a reference/offset.

INPUT 2 *Range: -300.00% to 300.00%*

This can be either a position/tension feedback or a reference/offset

RATIO 1 *Range: -3.0000 to 3.0000*

This multiplies Input 1 by a factor (Ratio 1).

RATIO 2 *Range: -3.0000 to 3.0000*

This multiplies Input 2 by a factor (Ratio 2).

DIVIDER 1 *Range: -3.0000 to 3.0000*

This divides Input 1 by a factor (Divider 1).

DIVIDER 2 *Range: -3.0000 to 3.0000*

This divides Input 2 by a factor (Divider 2).

ENABLE *Range: ENABLED/DISABLED*

A digital input which resets the (total) PID Output as well as the integral term when FALSE.

INT. DEFEAT *Range: ON/OFF*

A digital input which resets the integral term when TRUE. The block transfer function then becomes P+D only.

FILTER T.C. *Range: 0.000s to 10.000s*

In order to attenuate high-frequency noise a first order filter is added in conjunction with the differentiator. The ratio k of the Derivative Time Constant (Td) over the Filter Time Constant (Tf) (typically 4 or 5) determines the high-frequency lift of the transfer function. For Tf = 0 this filter is eliminated.

MODE *Range: 0 to 4*

This determines the law which the profiler follows versus diameter.
For Mode = 0, Profiled Gain = constant = P.
For Mode = 1, Profiled Gain = A * (diameter - min diameter) + B.
For Mode = 2, Profiled Gain = A * (diameter - min diameter)^2 + B.
For Mode = 3, Profiled Gain = A * (diameter - min diameter)^3 + B.
For Mode = 4, Profiled Gain = A * (diameter - min diameter)^4 + B.

MIN PROFILE GAIN *Range: 0.00% to 100.00%*

This expresses the minimum gain required at min diameter (core) as a percentage of the (max) P gain at full diameter (100%).

PROFILED GAIN *Range: 0.0 to 100.0*

The output of a profiler block which varies the gain versus diameter. This is primarily to be used with Speed Profiled Winders for compensation against varying diameter and therefore inertia. When MODE is not ZERO (see above) this overrides the P gain above.

PID OUTPUT

Refer to the DIAGNOSTICS function block description, page 6-18.

PID CLAMPED

Refer to the DIAGNOSTICS function block description, page 6-18.

PID ERROR

Refer to the DIAGNOSTICS function block description, page 6-18.

Functional Description

The following block diagram shows the internal structure of the PID block.

PID is used to control the response of any closed loop system. It is used specifically in system applications involving the control of drives to allow zero steady state error between Reference and Feedback, together with good transient performance.

Proportional Gain (PROP. GAIN)
This is used to adjust the basic response of the closed loop control system. It is defined as the portion of the loop gain fed back to make the complete control loop stable. The PID error is multiplied by the Proportional Gain to produce an output.

Integral (INT. TIME CONST.)
The Integral term is used to give zero steady state error between the setpoint and feedback values of the PID. If the integral is set to a small value, this will cause an underdamped or unstable control system.

Derivative (DERIVATIVE TC)
This is used to correct for certain types of control loop instability, and therefore improve response. It is sometimes used when heavy or large inertia rolls are being controlled. The derivative term has an associated filter to suppress high frequency signals.

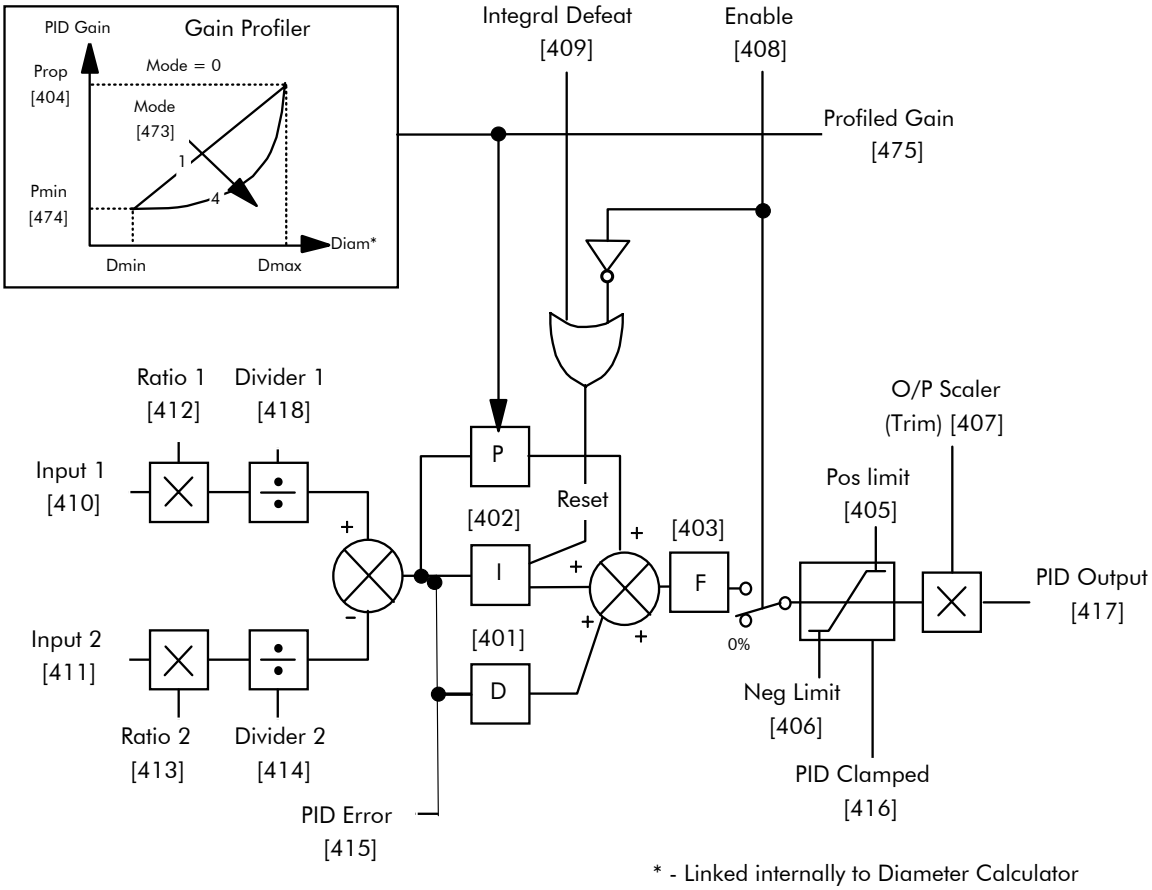

* - Linked internally to Diameter Calculator

Critically Damped Response

You should achieve a critically damped response, which allows the mechanics to track as precisely as possible a step change on the setpoint.

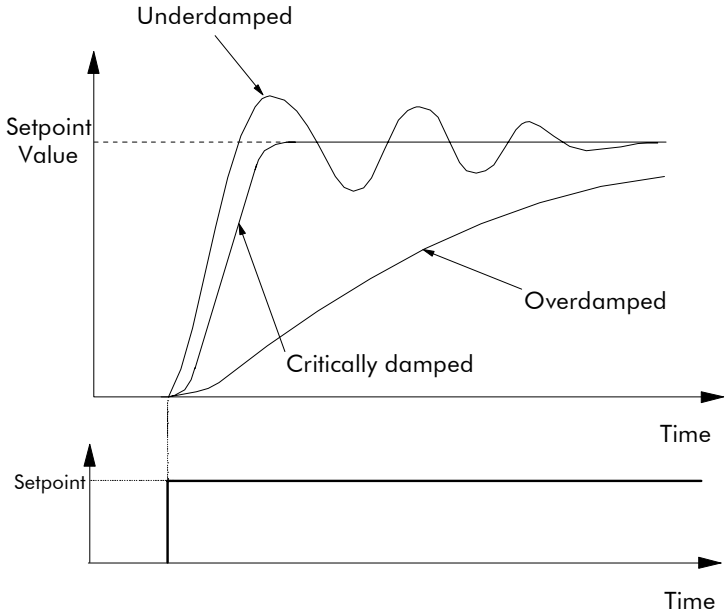

RAISE/LOWER

MMI Menu Map

1 SETUP PARAMETERS

2 RAISE/LOWER

- RESET VALUE
- INCREASE RATE
- DECREASE RATE
- RAISE INPUT
- LOWER INPUT
- MIN VALUE
- MAX VALUE
- EXTERNAL RESET

This function block acts as an internal motorised potentiometer (MOP).

The OUTPUT is not preserved during the power-down of the Converter.

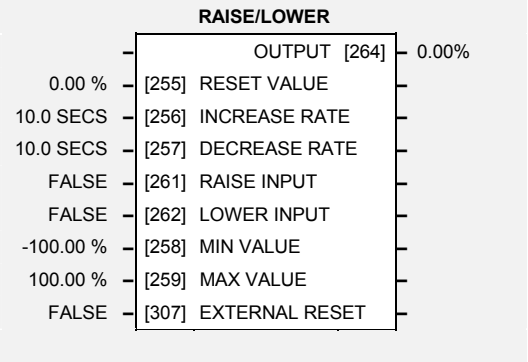

Parameter Descriptions

RESET VALUE

Range: -300.00 to 300.00 %

This reset value is pre-loaded directly into the output when EXTERNAL RESET is TRUE, or at power-up. It will be clamped by min and max values.

INCREASE RATE

Range: 0.1 to 600.0 SECS

Rate of change of increasing output value.

DECREASE RATE

Range: 0.1 to 600.0 SECS

Rate of change of decreasing output value.

RAISE INPUT

Range: TRUE/FALSE

Command to raise output.

LOWER INPUT

Range: TRUE/FALSE

Command to lower output.

MIN VALUE

Range: -300.00 to 300.00 %

Minimum ramp output clamp. This is a plain clamp, not a ramped "min speed" setting.

MAX VALUE

Range: -300.00 to 300.00 %

Maximum ramp output clamp.

EXTERNAL RESET

Range: TRUE/FALSE

If EXTERNAL RESET is TRUE, the output of the Raise/Lower block is set to the RESET VALUE.

OUTPUT

Refer to the DIAGNOSTICS function block description.

Functional Description

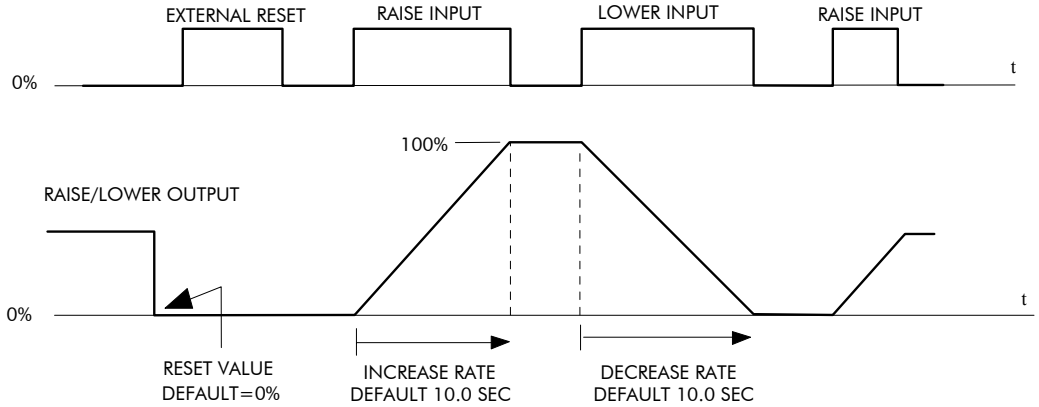

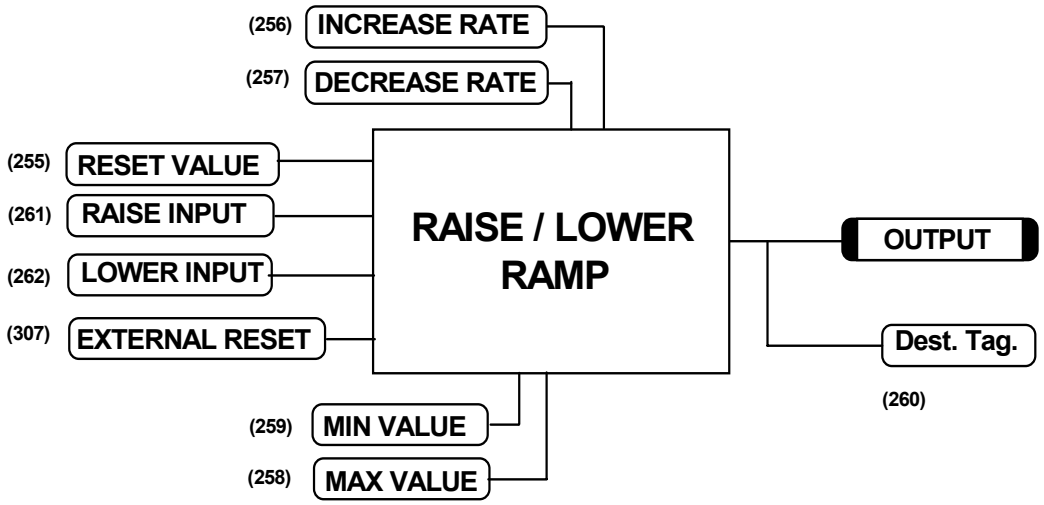

If Reset, Output = Reset Value (Clamped)

RAMPS

MMI Menu Map

1 SETUP PARAMETERS

2 RAMPS

- RAMP ACCEL TIME
- RAMP DECEL TIME
- RAMP HOLD
- RAMP INPUT
- % S-RAMP
- RAMPING THRESH.
- AUTO RESET
- EXTERNAL RESET
- RESET VALUE
- MIN SPEED

This function block forms part of the reference generation. It provides the facility to control the rate at which the Converter will respond to a changing setpoint.

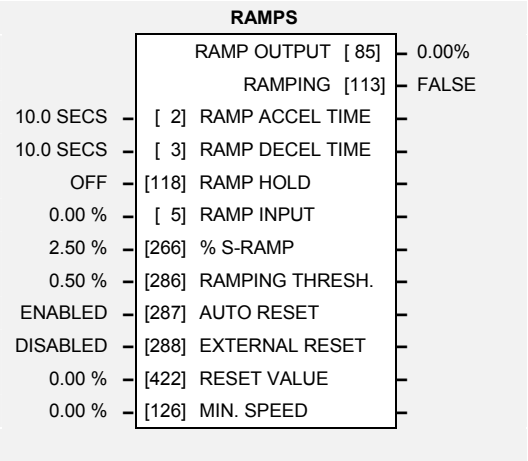

Parameter Descriptions

RAMP ACCEL TIME *Range: 0.1 to 600.0 SECS*

Acceleration time (100% change)

RAMP DECEL TIME *Range: 0.1 to 600.0 SECS*

Deceleration time (100% change)

RAMP HOLD *Range: ON/OFF*

While ON, the ramp output is held at its last value. This is overridden by *Ramp Reset*.

RAMP INPUT *Range: -100.00 to 100.00 %*

Ramp Input TAG.

% S-RAMP *Range: 0.00 to 100.00 %*

Percentage of ramp with S-shaped rate of change. A value of zero is equivalent to a linear ramp. Changing this value affects the ramp times.

RAMPING THRESH. *Range: 0.00 to 100.00 %*

Ramping flag threshold level. The threshold is used to detect whether the ramp is active.

AUTO RESET *Range: ENABLED/DISABLED*

If TRUE, then the ramp is reset whenever SYSTEM RESET is TRUE, that is each time the Speed/Current loop is unquenched. (SYSTEM RESET Tag No. 374 is an internal flag that is set TRUE for one cycle after the Speed/Current loop is enabled, i.e. every time the drive is started).

EXTERNAL RESET *Range: ENABLED/DISABLED*

If TRUE, then the ramp is held in reset. EXTERNAL RESET does not depend on AUTO RESET for its operation.

RESET VALUE *Range: -300.00 to 300.00 %*

This value is pre-loaded into the output when RAMP RESET is TRUE, or at power-up. In order to catch a spinning load smoothly (`bumpless transfer') connect SPEED FEEDBACK Tag No. 62 (source) to RESET VALUE Tag No. 422 (destination).

MIN SPEED *Range: 0.00 to 100.00 %*

The minimum speed clamp is fully bi-directional and operates with a 0.5% hysterisis. This clamp operates on the input to the ramp and it can therefore be overridden by the RESET VALUE as far as the ramp output is concerned.

Minimum Speed

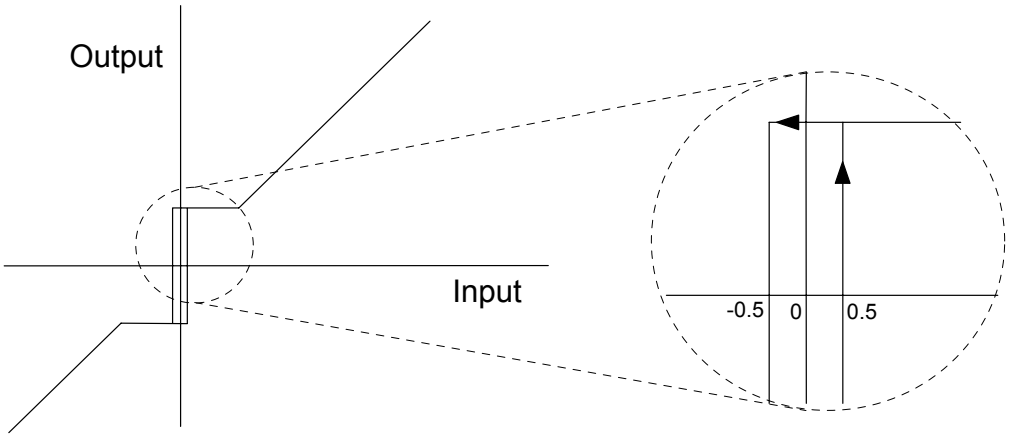

RAMP OUTPUT

Refer to the DIAGNOSTICS function block description, page 6-18.

RAMPING

Refer to the DIAGNOSTICS function block description, page 6-18.

Functional Description

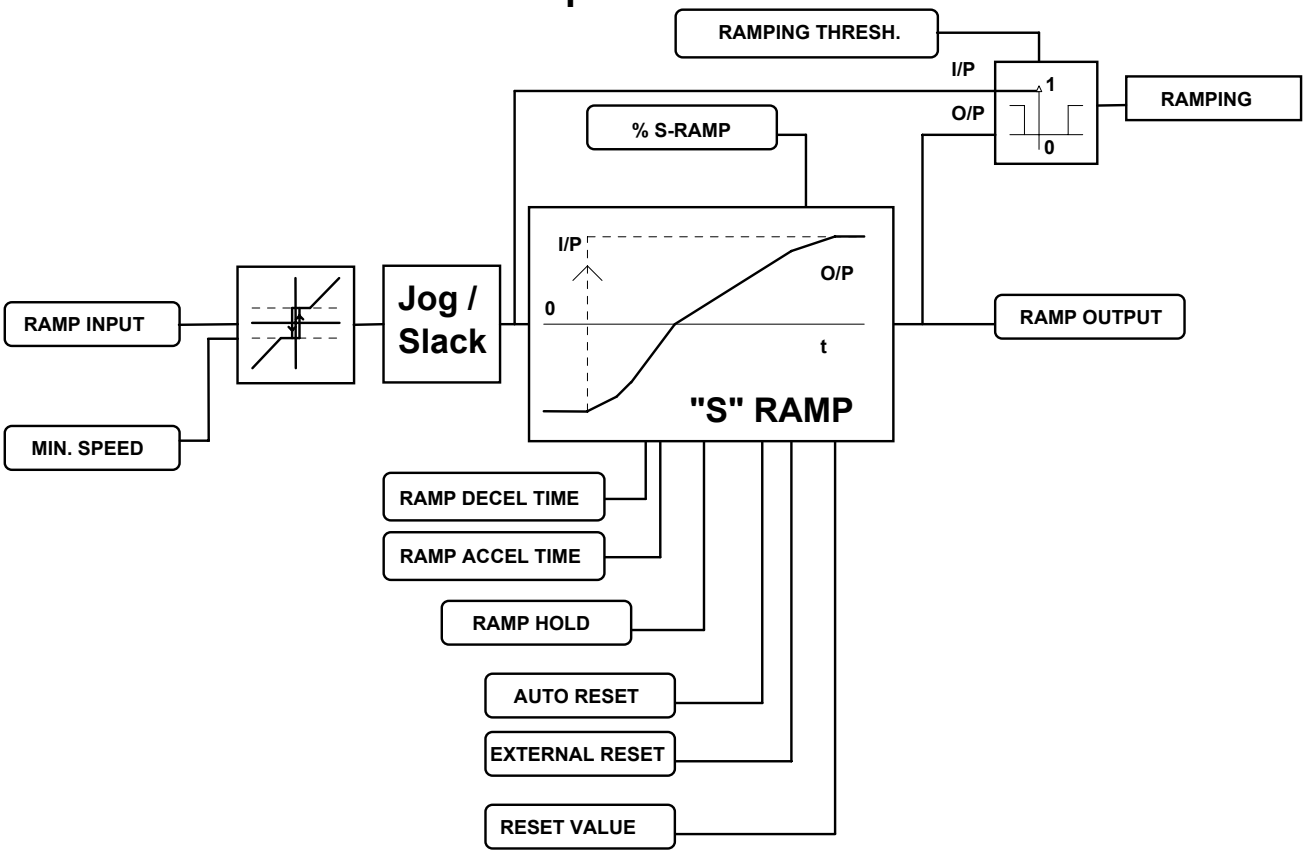

ACCELERATION/DECELERATION RATES

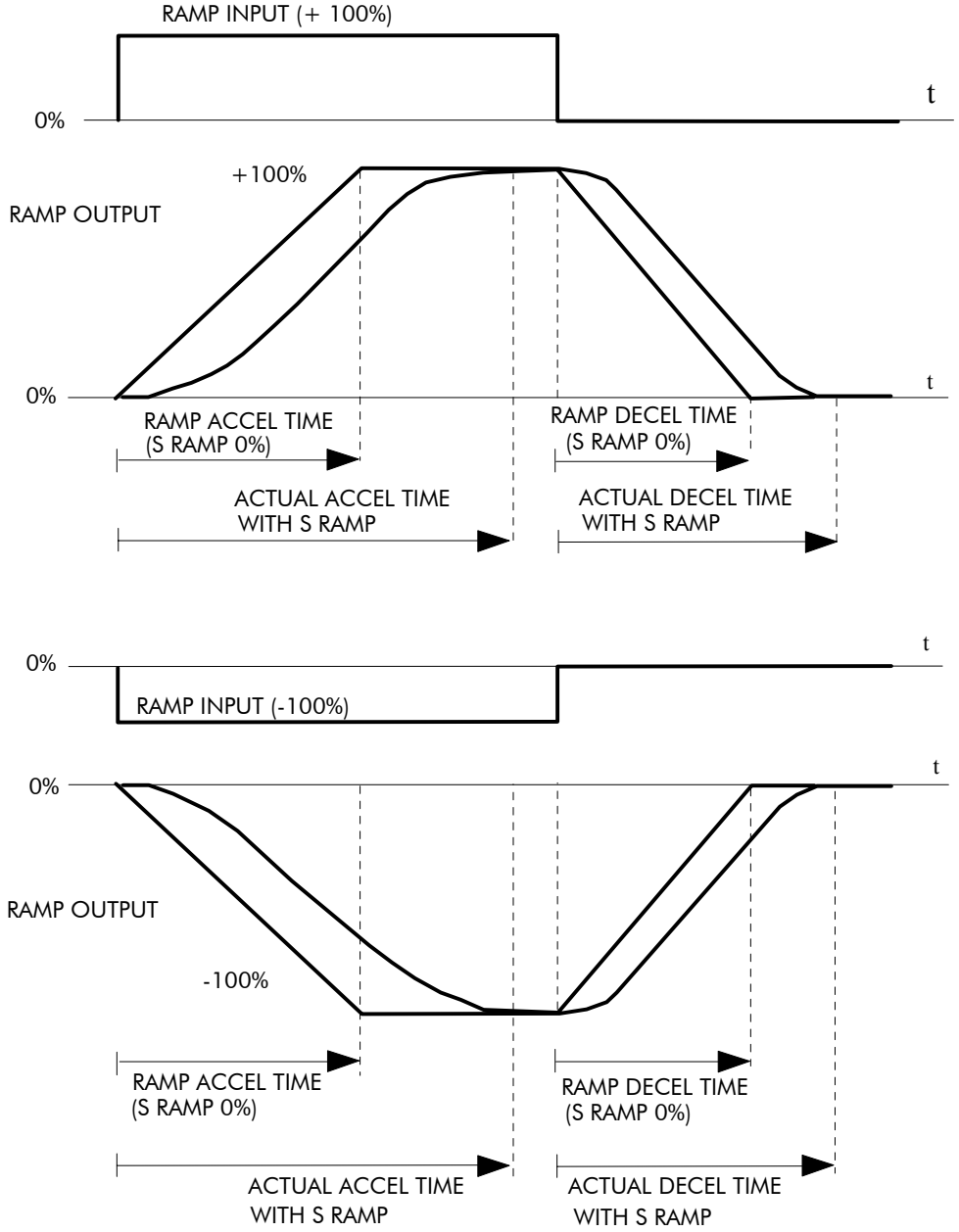

RAMP HOLD

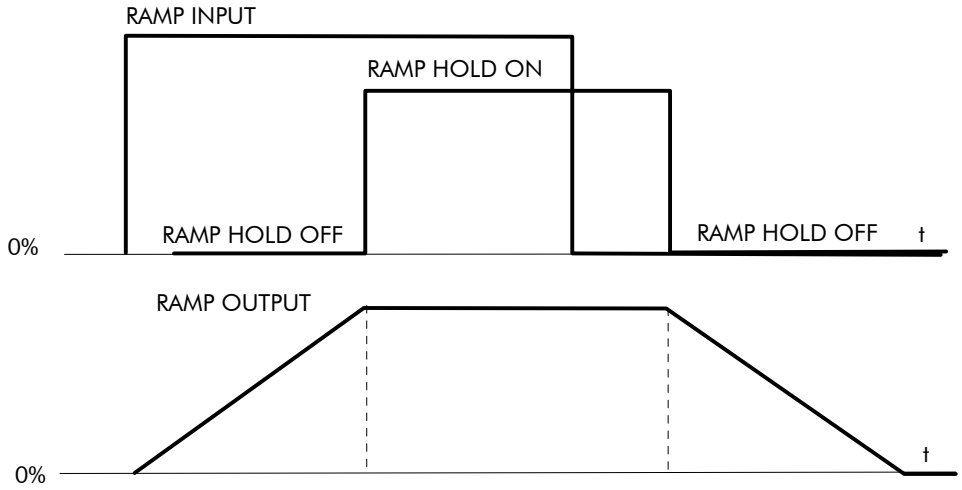

RAMP RESET

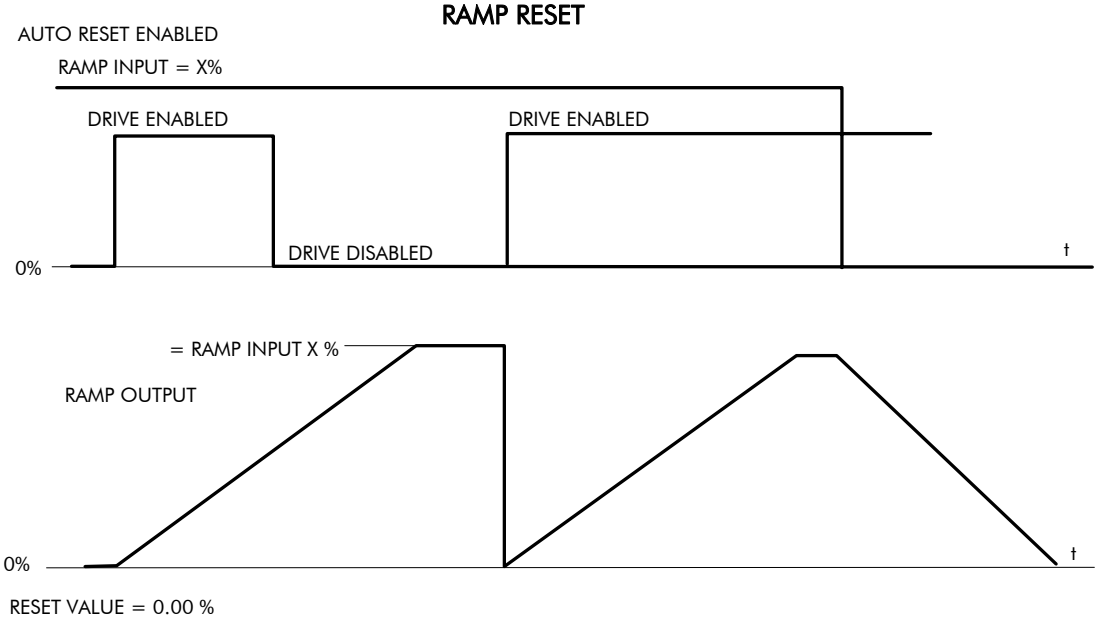

EXTERNAL RESET

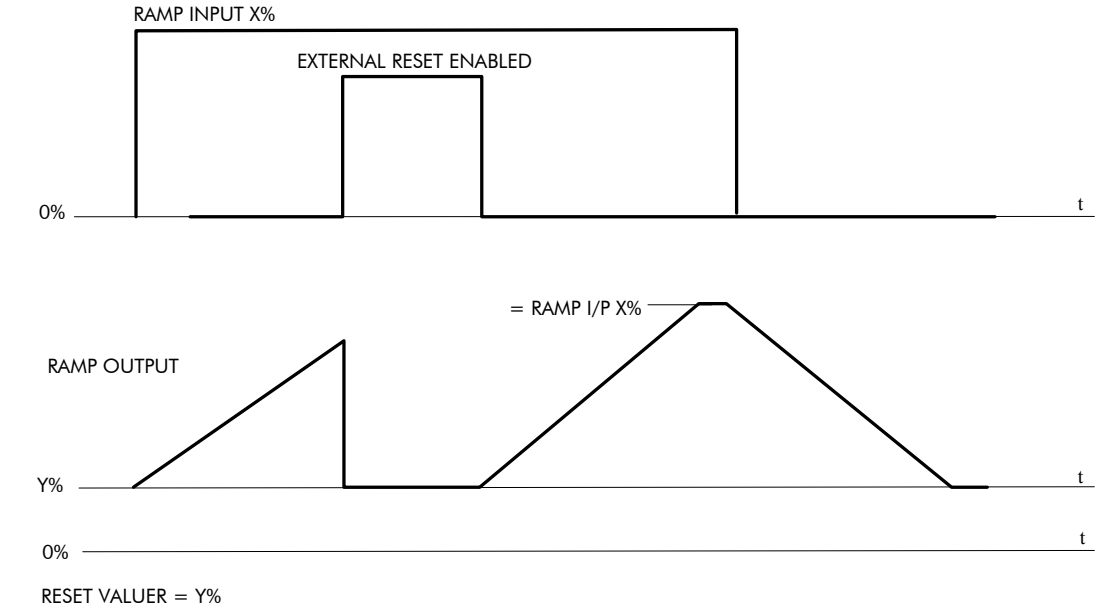

MIN SPEED

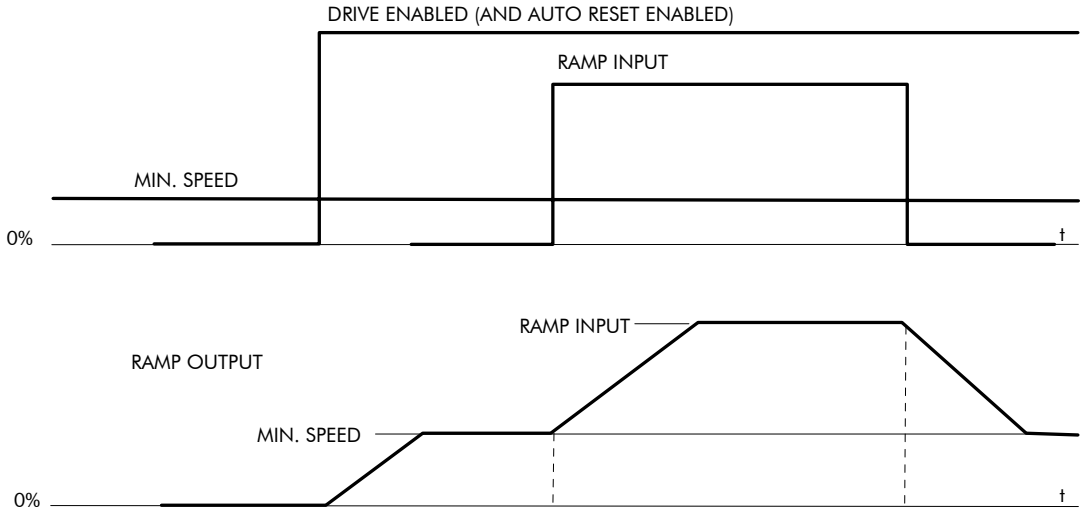

NOTE: THE POLARITY OF SPEED SETPOINT DETERMINES THE DIRECTION OF MIN. SPEED

SETPOINT SUM 1

MMI Menu Map

1 SETUP PARAMETERS
2 SETPOINT SUM 1
- RATIO 1
- RATIO 0
- SIGN 1
- SIGN 0
- DIVIDER 1
- DIVIDER 0
- DEADBAND WIDTH
- LIMIT
- INPUT 2
- INPUT 1
- INPUT 0

This can be configured to perform one of a number of functions upon a fixed number of inputs.

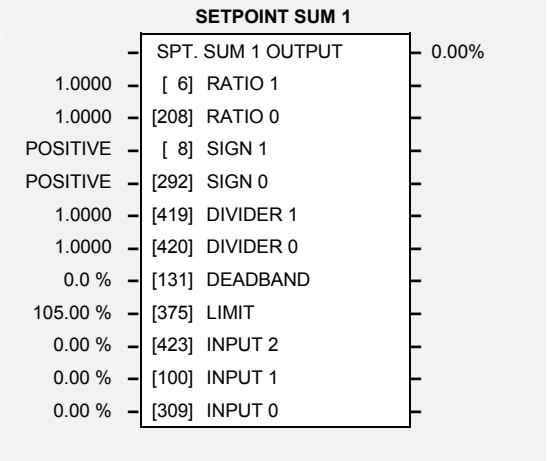

Parameter Descriptions

RATIO 1 *Range: -3.0000 to 3.0000*

Analog input 1 scaling.

RATIO 0 *Range: -3.0000 to 3.0000*

Input 0 scaling.

SIGN 1 *Range: POSITIVE/NEGATIVE*

Analog input 1 polarity.

SIGN 0 *Range: POSITIVE/NEGATIVE*

Input 0 polarity.

DIVIDER 1 *Range: -3.0000 to 3.0000*

Analog input 1 scaling. Dividing by 0 (zero) results in a zero output.

DIVIDER 0 *Range: -3.0000 to 3.0000*

Input 0 scaling. Dividing by 0 (zero) results in a zero output.

DEADBAND WIDTH *Range: 0.0 to 100.0 %*

Analog input 1 deadband width.

LIMIT *Range: 0.00 to 200.00 %*

The Setpoint Sum programmable limit is symmetrical and has the range 0.00% to 200.00%. The limit is applied both to the intermediate results of the RATIO calculation and the total output.

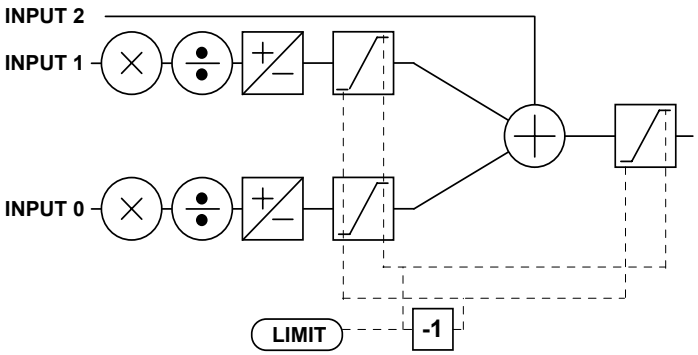

INPUT 2 *Range: -200.00 to 200.00 %*

Input 2 value. By default this is not connected to any analog input.

INPUT 1 *Range: -200.00 to 200.00 %*

Input 1 value. By default this is connected to Analog Input 1 (A2).

INPUT 0 *Range: -200.00 to 200.00 %*

Input 0 value. By default this is not connected to any analog input.

SPT. SUM 1 OUTPUT

Refer to the DIAGNOSTICS function block description, page 6-18.

SETPOINT SUM 2

MMI Menu Map

1 SETUP PARAMETERS
2 SPECIAL BLOCKS
3 SETPOINT SUM 2
- INPUT 2
- INPUT 1
- INPUT 0
- RATIO 1
- RATIO 0
- DIVIDER 1
- DIVIDER 0
- LIMIT
- SPT SUM OUTPUT

Setpoint Sum 2 is a general purpose summing and ratio block. Additional outputs are provided to gain access to each of Input 0 and Input 1 channel sub-calculations.

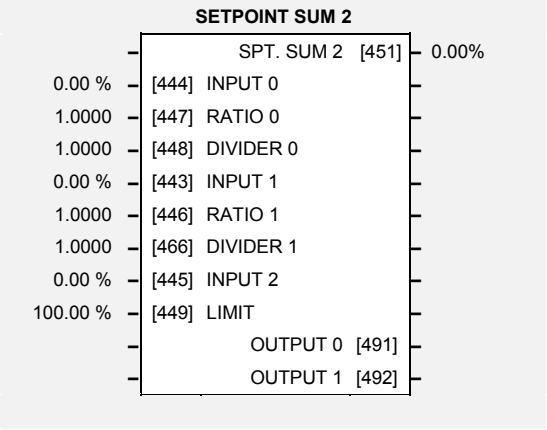

Parameter Descriptions

INPUT 0 *Range: -300.00 to 300.00 %*

Input 0 value. By default this is not connected to any analog input.

RATIO 0 *Range: -3.0000 to 3.0000 %*

Input 0 scaling.

DIVIDER 0 *Range: -3.0000 to 3.0000 %*

Input 0 scaling. Dividing by 0 (zero) results in a zero output.

INPUT 1 *Range: -300.00 to 300.00 %*

Input 1 value. By default this is connected to analog input 1 (A2).

RATIO 1 *Range: -3.0000 to 3.0000 %*

Analog input 1 scaling.

DIVIDER 1 *Range: -3.0000 to 3.0000 %*

Analog input 1 scaling. Dividing by 0 (zero) results in a zero output.

INPUT 2 *Range: -300.00 to 300.00 %*

Input 2 value. By default this is not connected to any analog input.

LIMIT *Range: 0.00 to 200.00 %*

The Setpoint Sum programmable limit is symmetrical and has the range 0.00% to 200.00%. The limit is applied both to the intermediate results of the RATIO calculation and the total output.

OUTPUT 0

Reserved parameter for use by Parker SSD Drives.

OUTPUT 1

Reserved parameter for use by Parker SSD Drives.

SPT. SUM 2 *Range: -200.00% to 200.00%*

(SPT SUM OUTPUT)
Main output of Setpoint Sum 2.
This output is connected using the SYSTEM / CONFIGURE I/O / BLOCK DIAGRAM menu.

Functional Description

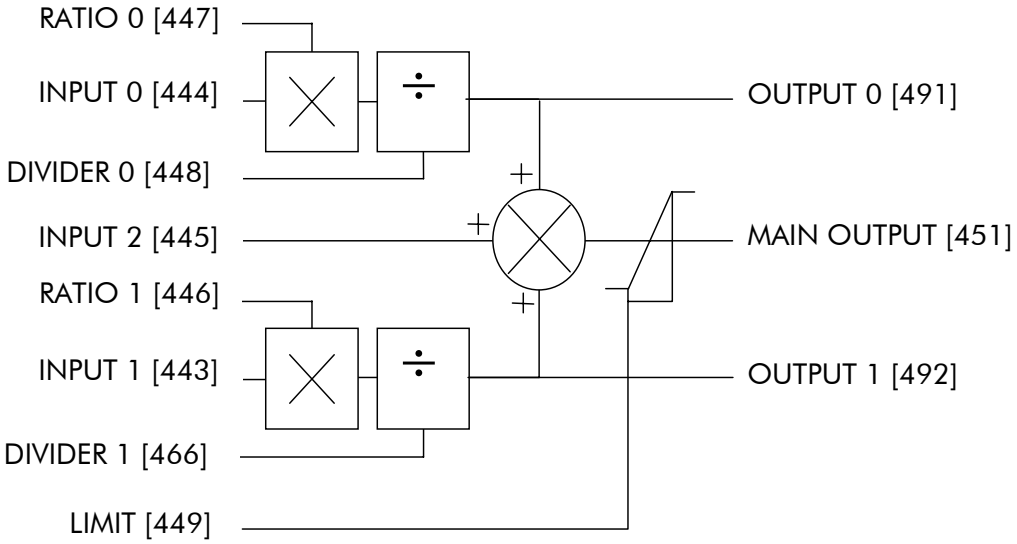

SPEED LOOP

This function block contains parameters for setting-up the speed loop. The block is viewed in two menus on the MMI.

MMI Menu Map

1 SETUP PARAMETERS
2 SPEED LOOP
- PROP. GAIN
- INT. TIME CONST.
- INT. DEFEAT
- ENCODER SIGN
- SPEED FBK SELECT

SETPOINTS

This MMI menu contains the setpoint parameter reference inputs for the function block.

MMI Menu Map

1 SETUP PARAMETERS
2 SPEED LOOP
3 SETPOINTS
- SETPOINT 1
- SIGN 2 (A3)
- RATIO 2 (A3)
- SETPOINT 2 (A3)
- SETPOINT 3
- SETPOINT 4
- MAX DEMAND
- MIN DEMAND

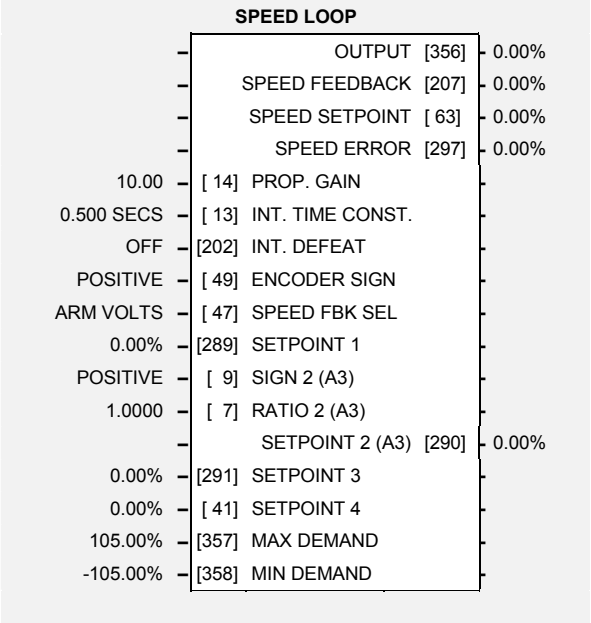

Parameter Descriptions

PROP. GAIN *Range: ENABLED/DISABLED*

Speed loop PI proportional gain adjustment.

INT. TIME CONST. *Range: 0.001 to 30.000 SECS*

Speed loop PI integral gain adjustment.

INT. DEFEAT *Range: ON/OFF*

Inhibits the integral part of the speed loop PI control to give proportional only control.

ENCODER SIGN *Range: POSITIVE/NEGATIVE*

Since the encoder feedback cannot be reversed electrically, the signal polarity can be reversed by the control software.

SPEED FBK SELECT *Range: See below*

Four options are available:

i) Armature voltage feedback
ARM VOLTS

ii) Analog tachogenerator feedback
ANALOG TACH

iii) Encoder feedback
ENCODER

iv) Analog / Encoder feedback
ENCODER / ANALOG

SETPOINT 1 *Range: -100.00 to 100.00 %*

Speed Setpoint 1 (Default Setpoint Sum 1 O/P).

SIGN 2 (A3) *Range: POSITIVE/NEGATIVE*

Speed Setpoint 2 Sign.

RATIO 2 (A3) *Range: -3.0000 to 3.0000*

Speed Setpoint 2 Ratio.

SETPOINT 2 (A3) *Range: -100.00 to 100.00 %*

Speed Setpoint 2 - Fixed (non-configurable) setpoint scanned synchronously with the current loop

SETPOINT 3 *Range: -100.00 to 100.00 %*

Speed Setpoint 3 (Default Ramp O/P).

SETPOINT 4 *Range: -100.00 to 100.00 %*

Speed Setpoint 4 (Default 5703 I/P).

MAX DEMAND *Range: 0.00 to 105.00 %*

Sets the maximum input to the speed loop. It is clamped at 105% to allow for overshoot in the external loops.

MIN DEMAND *Range: -105.00 to 0.00%*

Sets the minimum input to the speed loop.

OUTPUT

Reserved parameter for use by Parker SSD Drives.

SPEED FEEDBACK

Refer to the DIAGNOSTICS function block description, page 6-18.

SPEED SETPOINT

Refer to the DIAGNOSTICS function block description, page 6-18.

SPEED ERROR

Refer to the DIAGNOSTICS function block description, page 6-18.

Functional Description

Speed Loop PI Output

The PI output is accessible via Tag No. 356. This point is before the I Limit clamps and the summing of the additional current demand.

This Tag is not visible on the MMI.

Speed Loop PI with Current Demand Isolate

The speed loop output is still valid (active) with the I DMD. ISOLATE parameter enabled.

Note: *1 The speed loop is reset by unquenching the speed loop/current loop.*

2 I DMD. ISOLATE is overridden by Program Stop (B8) or Normal Stop (C3).

3 The speed loop PI is holding the integral term as soon as the PI output reaches current limit. This is true even in Current Demand Isolate mode where it may interfere depending on the way the speed PI is used. This feature is currently not suppressible.

105% Speed Demands

The speed demand clamping allows the speed setpoint to reach 105%. This applies only to the final summing junction immediately before the speed loop and also to the Setpoint Sum 1 output. Individual speed setpoints are still clamped to 100%.

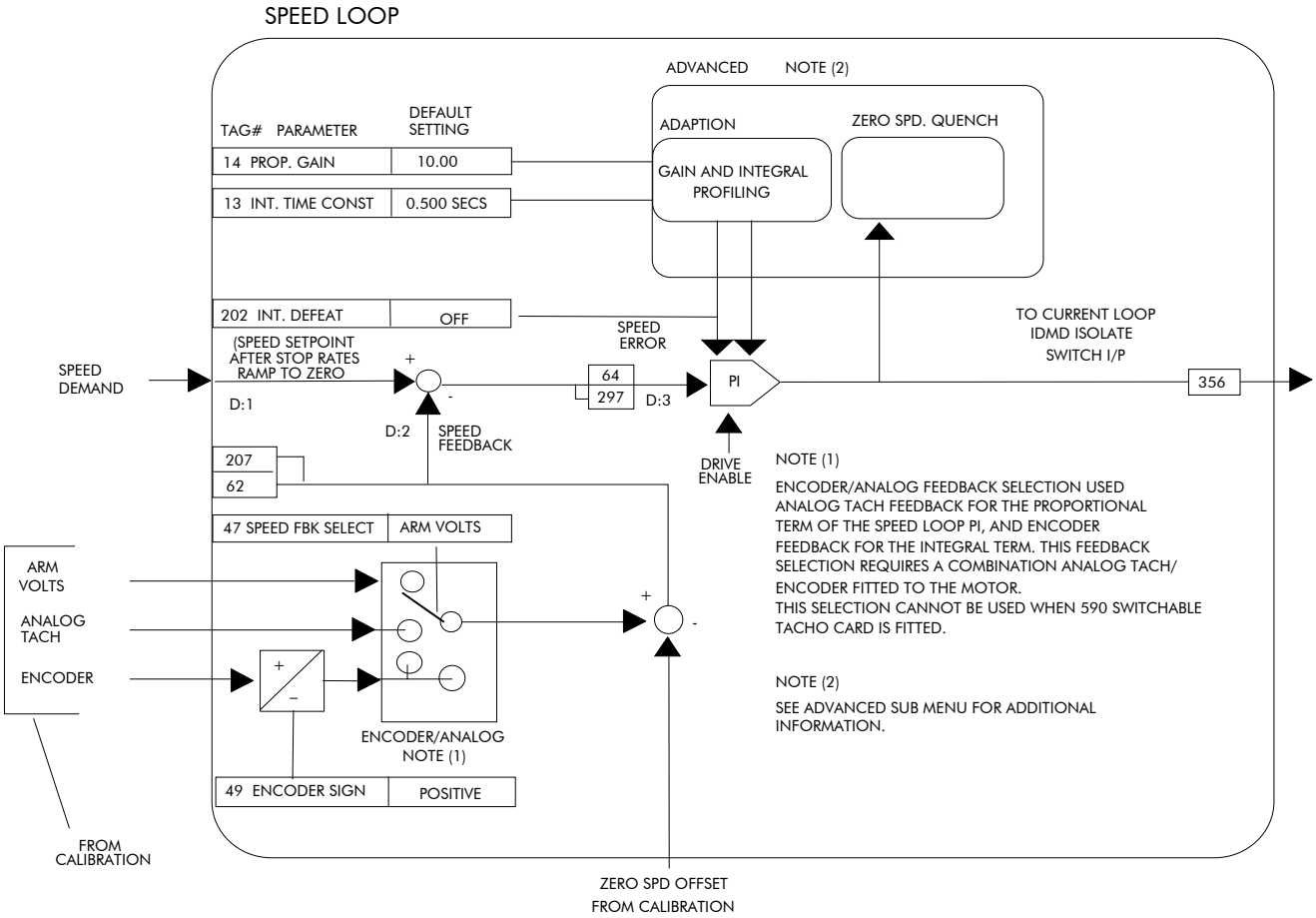

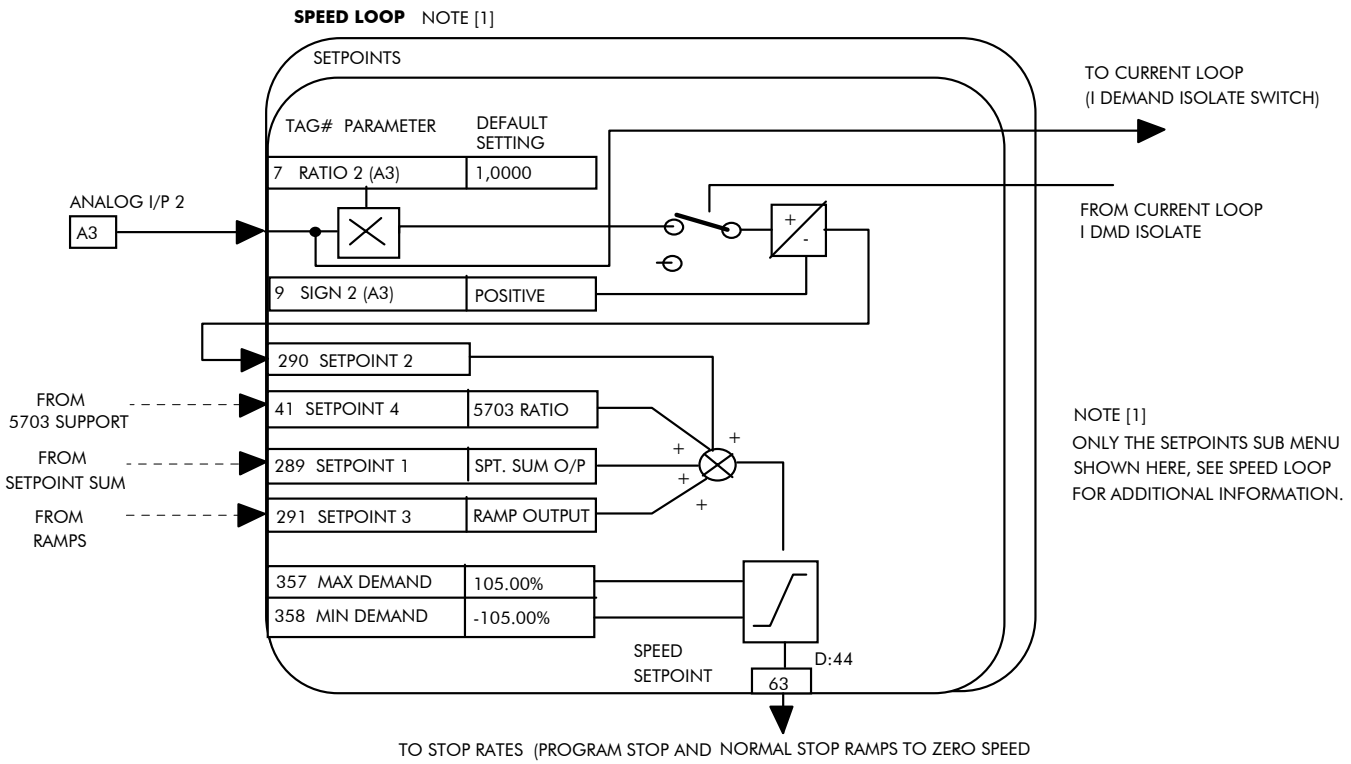
SPEED LOOP NOTE [1]
SETPOINTS
TAG# PARAMETER
DEFAULT SETTING
7 RATIO 2 (A3)
1,0000
ANALOG I/P 2
A3
9 SIGN 2 (A3)
POSITIVE
TO CURRENT LOOP
(I DEMAND ISOLATE SWITCH)
FROM CURRENT LOOP
I DMD ISOLATE
290 SETPOINT 2
FROM
5703 SUPPORT
41 SETPOINT 4
5703 RATIO
FROM
SETPOINT SUM
289 SETPOINT 1
SPT. SUM O/P
FROM
RAMPS
291 SETPOINT 3
RAMP OUTPUT
357 MAX DEMAND
105.00%
358 MIN DEMAND
-105.00%
SPEED
SETPOINT
D:44
63
NOTE [1]
ONLY THE SETPOINTS SUB MENU
SHOWN HERE, SEE SPEED LOOP
FOR ADDITIONAL INFORMATION.
TO STOP RATES (PROGRAM STOP AND NORMAL STOP RAMPS TO ZERO SPEED

ADVANCED

MMI Menu Map

1 SETUP PARAMETERS
2 SPEED LOOP
3 ADVANCED
- I GAIN IN RAMP
- POS. LOOP P GAIN

This function block is viewed in three menus on the MMI and contains the parameters for the advanced-user.

The ADVANCED MMI menu only contains the I GAIN IN RAMP parameter.

ADVANCED		
0	[268]	MODE
1.00 %	[269]	SPD BRK 1 (LOW)
5.00 %	[270]	SPD BRK 2 (HIGH)
5.00	[271]	PROP. GAIN
0.500 SECS	[272]	INT. TIME CONST.
1.0000	[274]	I GAIN IN RAMP
0.00%	[273]	POS. LOOP P GAIN
0.50 %	[284]	ZERO SPD. LEVEL
1.50 %	[285]	ZERO IAD LEVEL

ADAPTION

MMI Menu Map

1 SETUP PARAMETERS
2 SPEED LOOP
3 ADVANCED
4 ADAPTION
- MODE
- SPD BRK 1 (LOW)
- SPD BRK 2 (HIGH)
- PROP. GAIN
- INT. TIME CONST.

This MMI menu contains parameters for speed loop gain scheduling.

ZERO SPD. QUENCH

MMI Menu Map

1 SETUP PARAMETERS
2 SPEED LOOP
3 ZERO SPD. QUENCH
- ZERO SPD. LEVEL
- ZERO IAD LEVEL

Similar to Standstill logic (i.e. it stops making current but keeps the contactor in) except that the speed loop remains enabled and will cause the current loop to unquench very quickly.

Parameter Descriptions

MODE

Range: 0 to 3

0 - Disabled
1 - Speed Feedback Dependent
2 - Speed Error Dependent
3 - Current Demand Dependent

SPD BRK 1 (LOW)

Range: 0.00 to 100.00 %

IF `MODE` = 1	Then `BRK-points` correspond to speed feedback.
ELSE IF `MODE` = 2	Then `BRK-points` correspond to speed error.
ELSE IF `MODE` = 3	Then `BRK`-points correspond to current demand.

SPD BRK 2 (HIGH)

Range: 0.00 to 100.00 %

Above SPD BRK 2 (HIGH) the normal gains (as per main menu above) prevail.
Between the two break-points, a linear variation of the gains is implemented.

PROP. GAIN

Range: 0.00 to 200.00

Prop gain used below SPD BRK 1 (LOW)

INT. TIME CONST.

Range: 0.001 to 30.000 SECS

Integral time constant used below SPD BRK 1 (LOW)

I GAIN IN RAMP

Range: 0.0000 to 2.0000

While the RAMPING (Tag No. 113) flag is TRUE the integral gain is scaled by I GAIN IN RAMP. This can be used to help prevent integral wind-up while the drive is ramping (particularly high inertia loads).

POS. LOOP P GAIN

Reserved parameter for use by Parker SSD Drives.

ZERO SPD. LEVEL

Reserved parameter for use by Parker SSD Drives.

ZERO IAD LEVEL

Reserved parameter for use by Parker SSD Drives.

STANDSTILL

MMI Menu Map

1 SETUP PARAMETERS
2 STANDSTILL
- STANDSTILL LOGIC
- ZERO THRESHOLD

Standstill logic is used to inhibit rotation when operating with Zero Speed demand.

If the drive is below the Zero Speed threshold and Standstill logic is enabled, then the speed and current loops are quenched. This prevents shaft oscillation around zero speed.

It is useful in preventing gearbox wear due to "chattering".

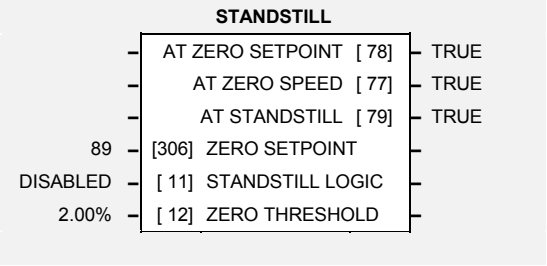

Parameter Descriptions

ZERO SETPOINT

(SOURCE TAG) *Reserved parameter for use by Parker SSD Drives.*

STANDSTILL LOGIC

Range: ENABLED/DISABLED

If TRUE, the Converter is quenched (although the contactor remains in) when the Speed Feedback and Speed Setpoint values are less than ZERO THRESHOLD.

ZERO THRESHOLD

Range: 0.00 to 100.00 %

Threshold level which defines zero setpoint and zero speed diagnostic outputs and also controls the zero speed relay output.

AT ZERO SETPOINT

Refer to the DIAGNOSTICS function block description, page 6-18.

AT ZERO SPEED

Refer to the DIAGNOSTICS function block description, page 6-18.

AT STANDSTILL

Refer to the DIAGNOSTICS function block description, page 6-18.

Functional Description

Standstill Logic inhibits the controller at zero setpoint and zero speed, i.e. at standstill.

The main contactor remains in and the Run LED remains ON.

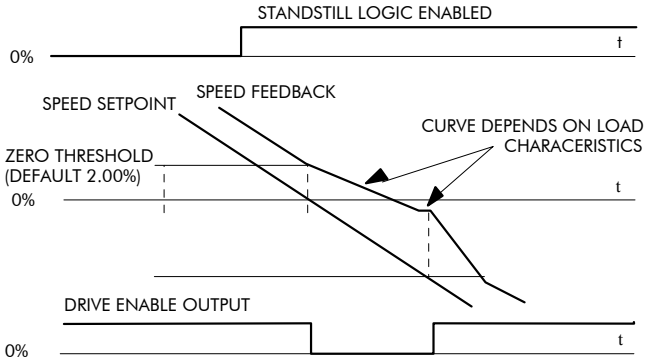

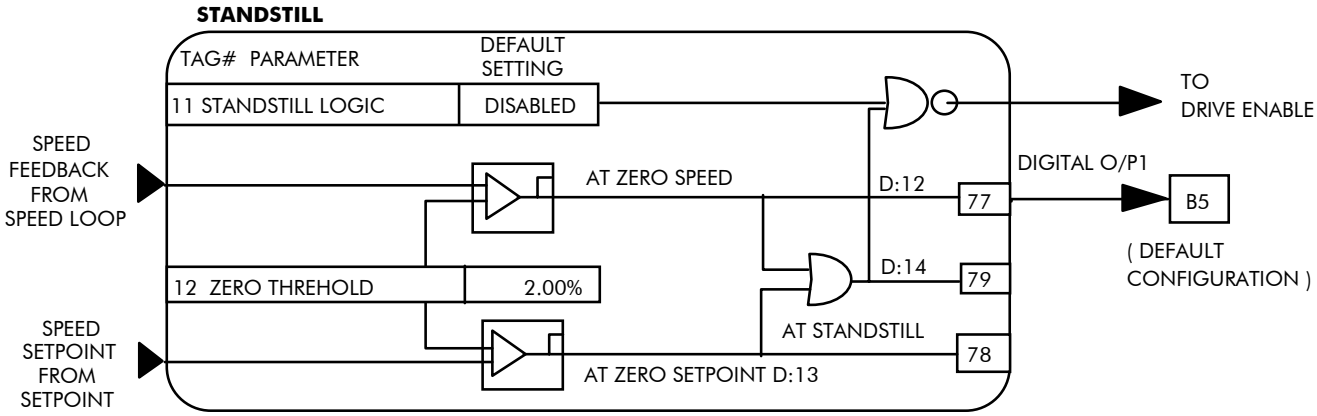

STOP RATES

MMI Menu Map

1 SETUP PARAMETERS

2 STOP RATES

- STOP TIME
- STOP LIMIT
- CONTACTOR DELAY
- PROG STOP TIME
- PROG STOP LIMIT
- PROG STOP I LIM
- STOP ZERO SPEED

This function block holds all the parameters concerning the stopping method of the converter.

The stopping methods of the converter are described in more detail in Chapter 4: "Operating the Converter" - Starting and Stopping Methods.

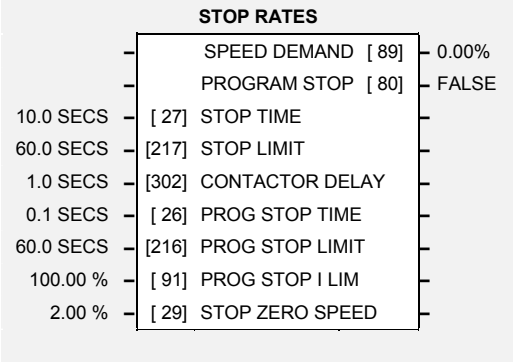

Parameter Descriptions

STOP TIME

Range: 0.1 to 600.0 SECS

Time to reach zero speed from 100% set speed in normal stop mode (C3 OFF).

STOP LIMIT

Range: 0.0 to 600.0 SECS

Delay time limit to allow normal stop action (regenerative breaking) to achieve zero speed before drive quench and coast stop. The timer is triggered by Start command (C3) going low.

CONTACTOR DELAY

Range: 0.1 to 600.0 SECS

This defines the time between the drive reaching STOP ZERO SPEED (Tag No. 29) and the contactor being opened. This is particularly useful during the jog cycle to prevent multiple operations of the main contactor.
If STOP ZERO SPEED is ≥ 0.25%, the drive will be quenched during the contactor delay.
The Contactor delay is *overridden* by Enable (C5).

Maintain zero speed during contactor delay.

If STOP ZERO SPEED is < 0.25%, the drive will not be quenched until CONTACTOR DELAY expires.

PROG STOP TIME

Range: 0.1 to 600.0 SECS

Time to reach zero speed from 100% set speed in program stop mode(B8 OFF).

PROG STOP LIMIT

Range: 0.0 to 600.0 SECS

Delay time limit to allow program stop action (regenerative breaking) to achieve zero speed before drive quench and coast stop. The timer is triggered by Program Stop command (B8) going low.

PROG STOP I LIM

Range: 0.00 to 200.00 %

Main current limit level in program stop mode assuming current limit not overridden by I Profile or Inverse Time limits.

STOP ZERO SPEED

Range: 0.00 to 100.00 %

Zero speed level in program stop and normal stop modes at which the contactor delay timer starts timing-out. At the end of this delay the contactor is de-energised.
See also CONTACTOR DELAY above.

SPEED DEMAND

Refer to the DIAGNOSTICS function block description, page 6-18.

PROGRAM STOP

Refer to the DIAGNOSTICS function block description, page 6-18.

Functional Description

Stop Hierarchy

Coast Stop - Terminal B9
- 0Disables the drive and opens the contactor via the pilot output

Enable - Terminal C5
- Suspends and resets the Control Loops

Program Stop - Terminal B8
- Independent ramp time
- Stop Timer
- Independent Current Limit that may be higher than normal Current Limit
- Independent zero speed

Normal Run/Stop - Terminal C3
- Independent ramp time
- Contactor Delay

Note: *The Converter's reaction to commands is defined by a state machine. This determines which commands provide the demanded action, and in which sequence. Consequently, COAST STOP and PROGRAM STOP must be FALSE, i.e. the Converter is not in Coast or Program mode, before a Run signal is applied otherwise the controller assumes a Stop mode and remains disabled. Refer to Chapter 4: "Operating the Converter" - Stopping Methods for descriptions of Coast Stop and Program Stop.*

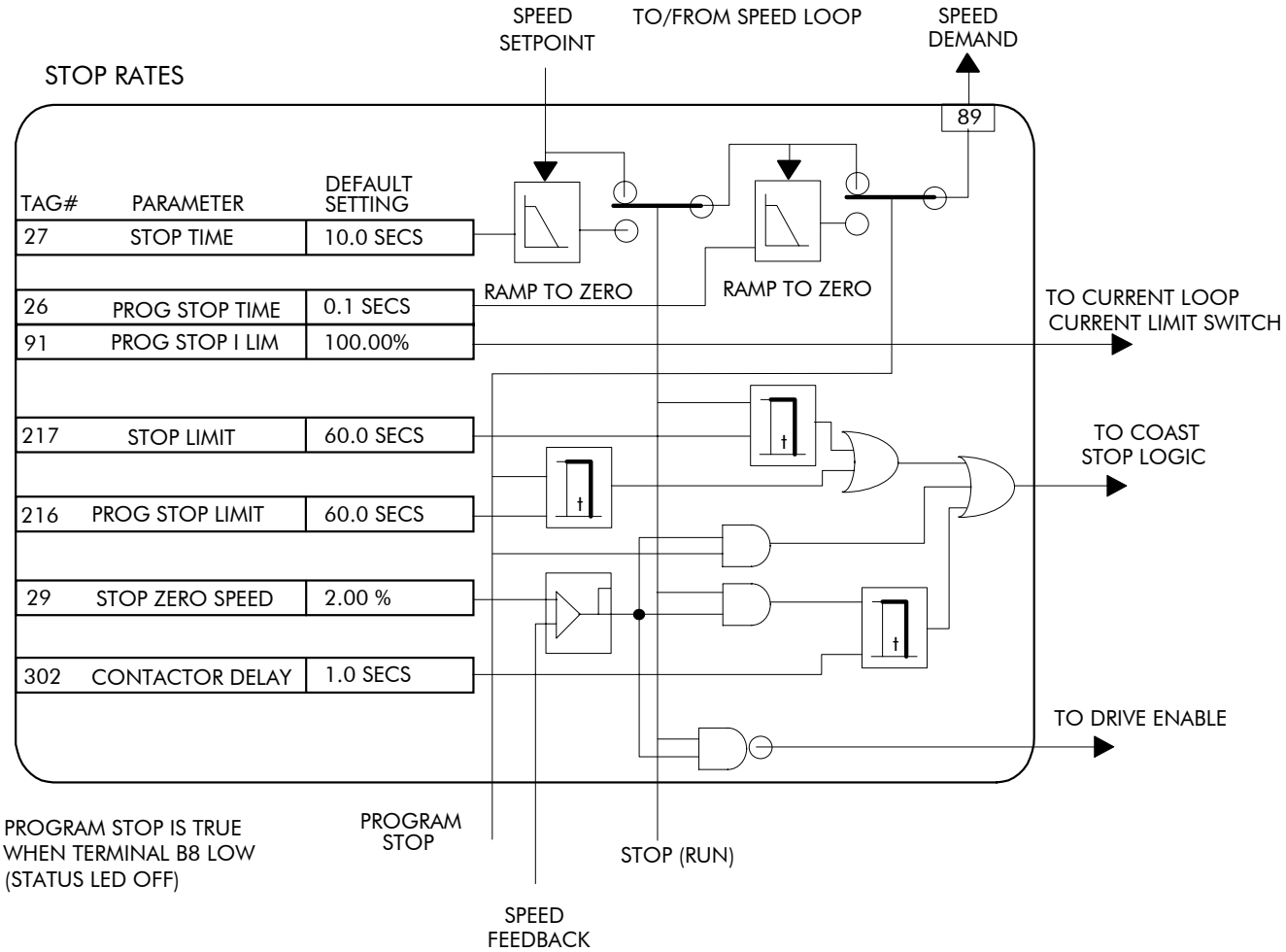

SYSTEM PORT P3

Refer to Chapter 14: "Serial Communications" - System Port P3 for further information.

This function block contains parameters for configuring the port for connection to ConfigEd Lite (or other suitable PC programming tool), or another VSD.

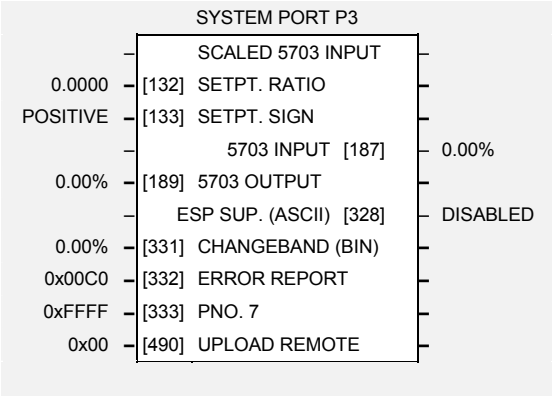

MMI Menu Map

1 SERIAL LINKS
2 SYSTEM PORT P3
- MMI DUMP -> P3
- UDP XFER <- P3
- UDP XFER -> P3

SYSTEM PORT P3

The MMI menu contains parameters for transferring data to and from a PC.

MMI Menu Map

1 SERIAL LINKS
2 SYSTEM PORT P3
3 P3 SETUP
- MODE
- P3 BAUD RATE

P3 SETUP

The MMI menu contains communication set-up parameters for System Port P3.

MMI Menu Map

1 SERIAL LINKS
2 SYSTEM PORT P3
3 P3 SETUP
4 BISYNCH SUPPORT
- GROUP ID (GID)
- UNIT ID (UID)
- ERROR REPORT

BISYNCH SUPPORT

The MMI menu contains parameters for supporting the BISYNCH protocol.

MMI Menu Map

1 SERIAL LINKS
2 SYSTEM PORT P3
3 P3 SETUP
4 5703 SUPPORT
- SETPT. RATIO
- SETPT SIGN
- 5703 INPUT
- 5703 OUTPUT

5703 SUPPORT

The MMI menu contains the parameters for connecting a 5703 Setpoint Repeater Unit.

Parameter Descriptions

SCALED 5703 INPUT

Reserved parameter for use by Parker SSD Drives.

SETPT. RATIO

Range: -3.0000 to 3.0000

Input scalar

SETPT. SIGN

Range: POSITIVE/NEGATIVE

Input sign

CHANGEBAND

Reserved parameter for use by Parker SSD Drives.

ERROR REPORT

Range: See below

Displays the last error as a hexadecimal code. Writing any value to this parameter will set the value to >00C0 (No Error). Refer to Chapter 14: "Serial Communications" - Reference for a list of codes.

PNO. 7

Reserved parameter for use by Parker SSD Drives.

UPLOAD REMOTE

Reserved parameter for use by Parker SSD Drives.

5703 INPUT

Range: -300.00% to 300.00%

5703 input diagnostic

5703 OUTPUT

Range: -300.00% to 300.00%

5703 output diagnostic

ESP SUP. (ASCII)

Reserved parameter for use by Parker SSD Drives.

TAPER CALC.

MMI Menu Map

1 SETUP PARAMETERS
2 SPECIAL BLOCKS
3 TAPER CALC.
- TAPER
- TENSION SPT.
- TAPERED DEMAND
- TENSION TRIM
- TOT. TENS. DEMAND

The purpose of this block is to profile the tension demand with diameter.

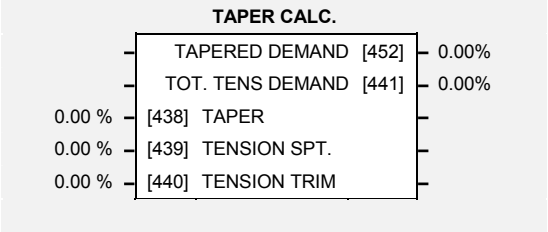

Parameter Descriptions

TAPER *Range: -100.00 to 100.00 %*

This defines the amount of tapering in the tension demand with diameter variation. When TAPER is positive, the tension demand is hyperbolically decreased as diameter increases

TENSION SPT. *Range: 0.00 to 100.00 %*

This is the required tension setpoint.

TENSION TRIM *Range: -100.00 to 100.00 %*

This is the additional tension demand in the form of a trim.

TAPERED DEMAND *Range: 0.00 to 100.00 %*

This is the output of the TAPER calculation on the TENSION SPT.

TOT. TENS. DEMAND *Range: -100.00 to 100.00 %*

This is the final output of this block (total tension demand) which can be connected to the appropriate points in the block diagram.

Functional Description

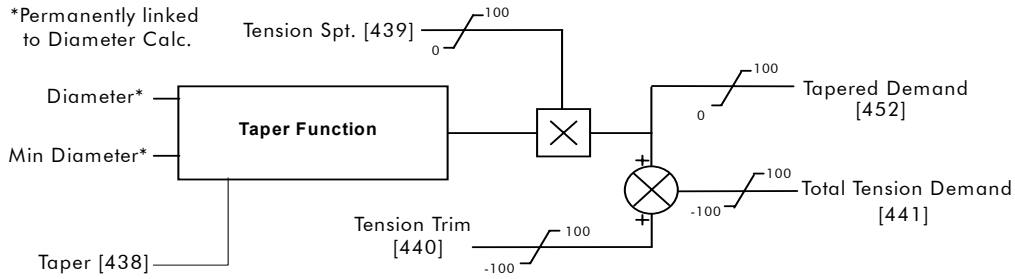

Hyperbolic Taper Tension

The taper block provides hyperbolic taper tension according to the following equation: -

$$\text{Tapered Demand} = \text{Tension Spt} \times \left\{100\% - \frac{\text{Taper}}{\text{Diameter}} \times \left(\text{Diameter} - \text{Min Diameter}\right)\right\}$$

The taper tension characteristics are shown below: -

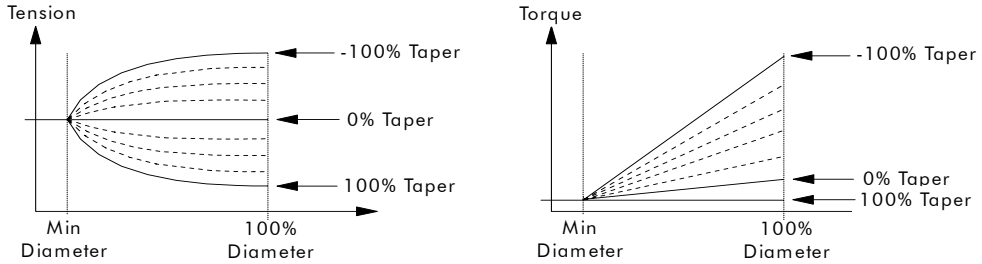

100% taper tension is equivalent to constant torque on the centre wind spindle.

TENS+COMP CALC.

MMI Menu Map

1 SETUP PARAMETERS

2 SPECIAL BLOCKS

3 TENS+COMP CALC.

- STATIC COMP
- DYNAMIC COMP
- REWIND
- FIX. INERTIA COMP
- VAR. INERTIA COMP
- ROLL WIDTH/MASS
- LINE SPEED SPT
- FILTER T.C.
- RATE CAL
- NORMALISED dv/dt
- INERTIA COMP O/P
- TENSION SCALER

This block, Tension + Compensation Calculator, compensates for static and dynamic friction, as well as the load inertia.

It achieves this by profiling the motor torque demand as a function of speed and acceleration.

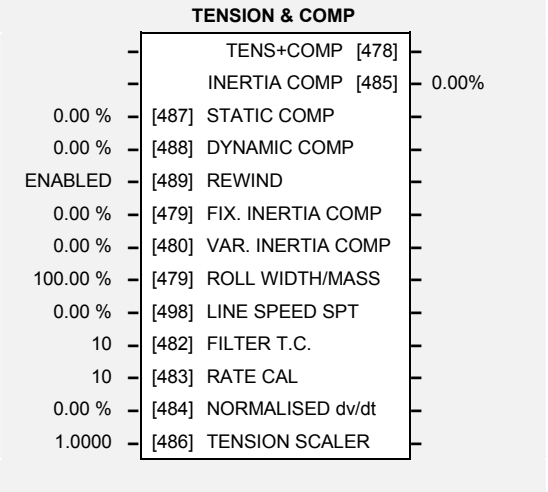

Parameter Descriptions

STATIC COMP *Range: -300.00 to 300.00 %*

Static friction compensation set-up parameter.

DYNAMIC COMP *Range: -300.00 to 300.00 %*

Variable friction compensation set-up parameter.

REWIND *Range: ENABLED/DISABLED*

Switches the sign of the friction compensations when the motor changes direction. This should be done when the line reverses.

FIX. INERTIA COMP *Range: -300.00 to 300.00 %*

Fixed inertia compensation set-up parameter.

VAR. INERTIA COMP *Range: -300.00 to 300.00 %*

Variable inertia compensation set-up parameter.

ROLL WIDTH/MASS *Range: 0.00 to 100.00 %*

Scales the inertia compensations dependant on roll width. 100% is maximum roll width.

LINE SPEED SPT *Range: -105.00 to 105.00 %*

Used to calculate the line speed acceleration rate value for the inertia compensations.

FILTER T.C. *Range: 0 to 2000*

The line speed acceleration rate value is calculated from the line speed input. The calculated rate value may have a large ripple content which will disturb the motor torque. The rate signal is therefore filtered, and this filter has a time constant given by this parameter.

RATE CAL *Range: -100.00 to 100.00 %*

Scales the inertia compensation acceleration rate value to 100% for the maximum line ramp rate. This parameter should be set to the maximum line full speed ramp rate in Seconds. The resultant rate value can be observed on the NORMALISED dv/dt value.

Note - Inertia compensation does not work well for line ramp rates above 100 secs and therefore this parameter is limited to 100.00.

NORMALISED dv/dt *Range: -300.00 to 300.00 %*

1. RATE CAL = 0.00: Allows an externally generated rate signal to be used in place of the calculated value described above. This rate signal must be normalised to 100% for maximum line ramp rate. Useful for large line ramp rates (>100 Secs)
2. RATE CAL not 0.00: Allows the internally calculated rate value to be monitored.

TENSION SCALER *Range: -3.0000 to 3.0000 %*

Scales the Tension Demand which is directly connected from the Taper Calculator.

TENS+COMP

Reserved parameter for use by Parker SSD Drives.

INERTIA COMP O/P *Range: -200.00 to 200.00 %*

Monitor point on the total inertia compensations.

MMI Menu Map

1 SETUP PARAMETERS
2 SPECIAL BLOCKS
3 TORQUE CALC.
- TORQUE DEMAND
- TENSION ENABLE
- OVER WIND

TORQUE CALC.

This block is used to split the motor current demand and use the appropriate current limit clamp dependant on winding roll direction.

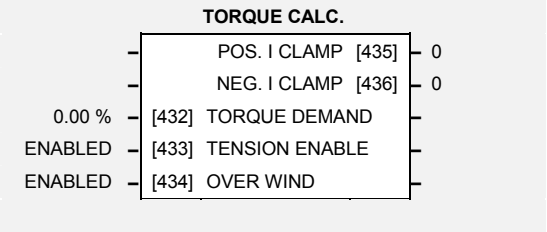

Parameter Descriptions

TORQUE DEMAND *Range: -200.00 to 200.00 %*

This is the torque input of the block.

TENSION ENABLE *Range: ENABLED/DISABLED*

When enabled, torque demand is applied. When disabled, the torque demand is zero.

OVER WIND *Range: ENABLED/DISABLED*

When enabled, Over Wind is selected which means the torque demand is applied in the positive quadrant (POS. I CLAMP, Tag No. 301). When disabled, Under Wind is selected which means the torque demand is applied in the negative quadrant (NEG. I CLAMP, Tag No. 48).

POS. I CLAMP

Reserved parameter for use by Parker SSD Drives.

NEG. I CLAMP

Reserved parameter for use by Parker SSD Drives.

Functional Description

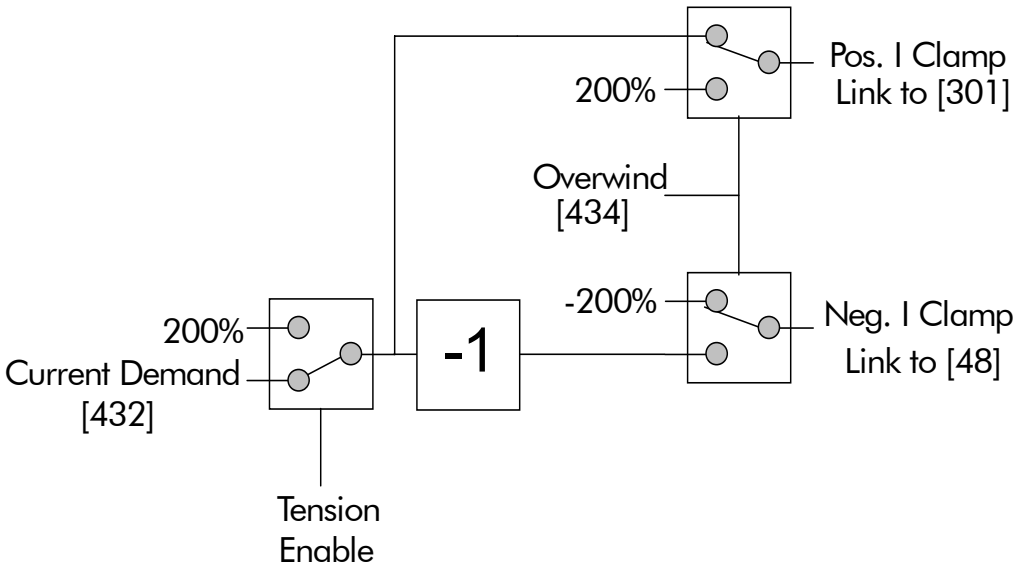

USER FILTER

This is an internal function block and does not appear as a menu on the MMI.

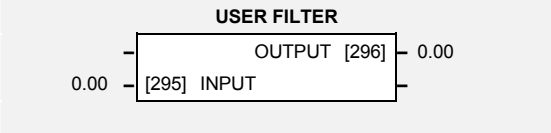

Parameter Descriptions

INPUT

Reserved parameter for use by Parker SSD Drives.

OUTPUT

Reserved parameter for use by Parker SSD Drives.

TRIPS AND FAULT FINDING

Trips

What Happens when a Trip Occurs

When a trip occurs, the Converter's power stage is immediately disabled causing the motor and load to coast to a stop. The trip is latched until action is taken to reset it. This ensures that trips due to transient conditions are captured and the Converter is disabled, even when the original cause of the trip is no longer present.

MMI Indications

If a trip condition is detected the unit displays and performs the following actions.

1. The HEALTH LED goes out indicating a Trip condition has occurred. The MMI displays the activated alarm. (Investigate, find and remove the cause of the trip.)
2. Terminal B6 (Healthy) goes low (0V).
3. The alarm message(s) can be acknowledged by pressing the **E** key, however, the unit will not restart at this point. Refer to Chapter 5: "The Man-Machine Interface (MMI)" - Alarm Message Displays.

Resetting a Trip Condition

All trips must be reset before the Converter can be re-enabled. A trip can only be reset once the trip condition is no longer active, i.e. a trip due to a heatsink over-temperature will not reset until the temperature is below the trip level.

Note: *More than one trip can be active at any time. For example, it is possible for both the HEATSINK TRIP and the OVERVOLTS (VA) trips to be active. Alternatively it is possible for the Converter to trip due to a FIELD OVER I error and then for the HEATSINK TRIP trip to become active after the Converter has stopped (this may occur due to the thermal time constant of the heatsink).*

You can reset the trip(s) in one of two ways:

1. Power -up, or remove and re-apply the auxiliary power supply.
2. Stop and start the converter, i.e. remove and re-apply the Start/Run signal (terminal C3 or C4).

Success is indicated by the MMI's HEALTH LED illuminating. The display will return to its original display.

Alarm Messages

MMI Menu Map

1 ALARM STATUS
- LAST ALARM
- HEALTH WORD
- HEALTH STORE

When a trip occurs an alarm message is displayed on the MMI, and information about the trip is stored in the ALARM STATUS menu.

The alarm message and the LAST ALARM parameter are displayed in the selected language of the MMI.

The HEALTH STORE and HEALTH WORD parameters display information as hexadecimal values, or the sum of the hexadecimal values when more than one alarm is active. Thus the unique value can represent one or more alarms. For a list of alarms refer to Chapter 6: "Programming Your Application" - Hexadecimal Representation of Trips.

Note: *Hexadecimal refers to the common practice of counting to the base of 16 in computing rather than the base of 10. The sixteen `numbers' used being 0 to 9, A to F. Thus an 8 bit byte is represented by two characters in the range 00 to FF, while a 16 bit word is represented by four characters in the range 0000 to FFFF.*

LAST ALARM

This display shows the last alarm message to have been displayed. To reset the parameter simply press the ↓ (DOWN) key to clear the alarm. Alternatively, you can switch the auxiliary supply off and on, causing NO ACTIVE ALARMS to be displayed.

HEALTH WORD

This parameter is used to continuously monitor the status of the Converter. As alarms are added or removed, the display will immediately update to show the hexadecimal sum of these alarms.

The value reverts to 0x0000 when the Start (C3) input is raised (+24V), and when no trip condition is present.

HEALTH STORE

This displays the hexadecimal value of the first (or only) alarm to occur causing the trip condition.

The display reverts to 0x0000 when the Start (C3) input is raised (+24V).

Using the MMI to Manage Trips

Trip Messages

Most of the alarms have a delay timer so that the Converter only trips if the condition persists for the whole of the delay period.

If the Converter trips, then the display immediately shows a message indicating the reason for the trip. The possible trip messages are given in the table below.

Trip Message and Meaning	Possible Reason for Trip
OVERSPEED Motor overspeed - the speed feedback signal has exceeded 125% of rated speed.	Badly adjusted speed loop (alarm only operates with encoder or armature volts feedback selected) Alarm time delay : 0.1 seconds
MISSING PULSE A missing pulse from the 6-pulse armature current waveform. Trips when the motor loading exceeds 1.5 times the DISCONTINUOUS parameter value.	Firing plug failure Connection failure Alarm time delay : 60 seconds
FIELD OVER I The motor field current has exceeded 120% of the calibrated value	Regulator failure Badly tuned control loop (alarm only operates with field current control mode selected) Alarm time delay : 15 seconds
HEATSINK TRIP The Converter heatsink temperature is too high	The ambient air temperature is too high Poor ventilation or spacing between Converters Fan failure, check fuse FS1 on power board, wrong rotation (models above 70A bridge rating) Blocked ventilation slots Clogged air filters Excessive armature current - nominal armature current on motor nameplate should be checked against the current calibration for the Converter. ***Note:*** *The stack must be allowed to cool in order to re-start the Converter.* Alarm time delay : 0.75 seconds

Trip Message and Meaning	Possible Reason for Trip
THERMISTOR	
The motor temperature is too high	Inadequate ventilation Blower failure -check for direction, clogged air filters (models above 70A bridge rating) Excessive armature current - check nominal armature current on nameplate against current calibration) ***Note:*** *The motor must be allowed to cool in order to re-start the Converter.* Alarm time delay : 15 seconds
OVERVOLTS (VA)	
Motor armature voltage has exceeded 120% of rated volts	Loose armature connection Badly adjusted field voltage setting Badly adjusted field current loop Badly adjusted field-weakening bemf loop Badly adjusted speed loop Alarm time delay : 1.5 seconds
SPEED FEEDBACK	
The difference between speed feedback and armature voltage feedback is greater than the SPDFBK ALM LEVEL parameter value If FLD WEAK ENABLE parameter is enabled, speed feedback is less than 10% when in the field weakening region	Analog tacho feedback polarity incorrect (terminals G3 and G4) The ENCODER SIGN parameter's polarity is incorrect Disconnection of wiring, including fibre optics Tachogenerator failure Tachogenerator coupling failure Alarm time delay : 0.4 seconds
ENCODER FAILED	
No speed feedback signal	The SPEED FBK SELECT parameter is set to ENCODER but an optional Encoder board is not fitted Where applicable, check fibre optic cable for damage, bend radius, operating length - refer to Microtach handbook. Check cable and connections on wire-ended encoder
FIELD FAIL	
Field current is less than 6% of rated current when in Current Control mode Field current is less than 50mA when in Voltage Control mode (with default current burden of 15K)	Open circuit motor field - check connection and measure field resistance Faulty operation of field controller Where an ac supply feeds the onboard field regulator, check connections D1 and D2 for line-to-line voltage (rather than line-to-neutral) - L1 into D1, L2 into D2. Note that the 3-phase supply must be present for mains synchronisation purposes. For loads where no field supply is required, e.g. a permanent magnet motor, set the FIELD ENABLE parameter to disable to suspend this alarm. Alarm time delay : 0.75 seconds
3-PHASE FAILED	
3-phase supply failure	Total failure of supply, or missing phase of 3-phase supply (detected under most circumstances) - check supply to the controller, check high-speed thyristor stack protection fuses, check power chassis coding fuses. Check the mains voltage of the Converter (refer to Product Code). This alarm may not operate properly with controller if the voltage is incorrect, i.e. wrong unit or controller.

Trip Message and Meaning	Possible Reason for Trip
PHASE LOCK Supply frequency is outside the frequency band limits 45 - 65Hz	Check supply frequency Synchronisation errors caused by distorted supply
5703 RCV ERROR Invalid data received via P3 port from another Converter	(Alarm only operates when MODE parameter is set to 5703 SLAVE)
STALL TRIP With motor stationary (AT ZERO SPEED parameter shows TRUE), current has exceeded the STALL THRESHOLD parameter value for longer than the STALL TRIP DELAY parameter value	(Alarm only operates when the STALL TRIP parameter is enabled).
OVER I TRIP Current feedback value has exceeded 280% of rated current	(300% loading not exceeding 15ms or 325% not exceeding 6.6ms is acceptable) Motor armature windings failure - check insulation resistance. Badly tuned current loop Faulty Converter - refer to Parker SSD Drives
ACCTS FAILED AC current transformer plug connection to Converter power board missing	Check armature current transformer plug for correct installation. ***Note:*** *The trip prevents the contactor closing and the current loop activating without armature current feedback - important in the case of external stack controllers where the thyristor stack is remote from the control board.*
AUTOTUNE ERROR Speed feedback has exceeded 20% of rated speed, or current field feedback has exceeded 6% of rated field current	(Alarm only operates during the Autotune sequence).
AUTOTUNE ABORT The Autotune sequence has been aborted.	Coast Stop, Program Stop, Enable or Start Run terminal(s) disabled during Autotune sequence The AUTOTUNE parameter reset during the Autotune sequence Autotune sequence has timed-out (approximately 2 minutes).

Table 7-1 Trip Messages

Symbolic Alarm Messages

These are generally internal software or hardware. If these should occur please investigate, or contact Parker SSD Drives Technical Support.

Number	Description	Action
0xF003	Pre-Ready Fault	Coding not present. Replace power board or chassis. (If an external stack, check coding supply field).
0xFF03	Aux Power Fail	Check Aux. Supply and/or Mains Input

Self Test Alarms

Self Test Alarm and Meaning	Possible Reason for Alarm
(EEPROM) CHECKSUM FAIL	
Parameters not saved, or are corrupted.	(The alarm appears at power-up or at the end of "Upload" UDP Transfer) Corrupted UDP file loaded - press the **E** key and perform a PARAMETER SAVE. The Converter will be returned to its factory default values.
ENABLE CONFIG.	
The ENABLE CONFIG. parameter has been left in the Enable state.	Select Disable for the ENABLE CONFIG. parameter
LANGUAGE CHECKSUM FAIL	
Incorrect language selected, or corrupted	(The alarm appears at power-up or at the end of "Upload" UDP Transfer) Corrupted UDP file loaded - press the **E** key and reload the correct language or de-select the second language.
INIT CAL FAIL	
Self calibration of analog inputs has exceeded normal tolerance	(The alarm appears at power-up) As a temporary measure, the tolerance can be increased by 0.1% with each press of the **E** key, however, this indicates a hardware fault - refer to Parker SSD Drives.
IA FBK CAL FAIL / IA INST CAL FAIL	
The self calibration of the armature current has failed	(The alarm appears at power-up) If powering the unit off and on does not remove the problem, a hardware failure is suspected. Refer to Parker SSD Drives.

Setting Trip Conditions

The following function blocks (MMI menus) are used to set trip conditions:

OVER SPEED LEVEL
SPDFBK ALM LEVEL
STALL THRESHOLD
STALL TRIP DELAY

Viewing Trip Conditions

The following function blocks (MMI menus) can be viewed to investigate trip conditions:

HEALTH STORE
HEALTH WORD
STALL TRIP

Inhibiting Alarms

The following alarms can be inhibited in the INHIBIT ALARMS menu.

SPEED FEEDBACK
ENCODER FAILED
FIELD FAILED
5703 RCV ERROR
STALL TRIP

Note: *The STALL TRIP parameter in the DIAGNOSTICS menu is set regardless of the state of STALL TRIP inhibit. The flag is set after the stall time-out expires. The relevant bit (bit 12) in the HEALTH WORD and HEALTH STORE parameters is only set when STALL TRIP is enabled.*

Fault Finding

Problem	Possible Cause	Remedy
Converter will not power-up	Fuse blown	Check supply details, replace with correct fuse.
		Check Product Code against Model No.
	Faulty cabling	Check all connections are correct and secure.
		Check cable continuity
Converter fuse keeps blowing	Faulty cabling or connections wrong	Check for problem and rectify before replacing with correct fuse
	Faulty Converter	Contact Parker SSD Drives
Cannot obtain HEALTH state	Incorrect or no supply available	Check supply details
Motor will not run at switch on	Motor jammed	Stop the Converter and clear the jam
Motor runs and stops	Motor becomes jammed	Stop the Converter and clear the jam
Motor runs at full speed only	Reversed tachogenerator or open circuit tachogenerator	Check tachogenerator connections
	Open circuit speed reference potentiometer	Check terminal

Table 7-2 Fault Finding

Test Points

The following test points are located on the control board and, used with a meter, will provide valuable information in the event of a fault. Refer to Parker SSD Drives for further information.

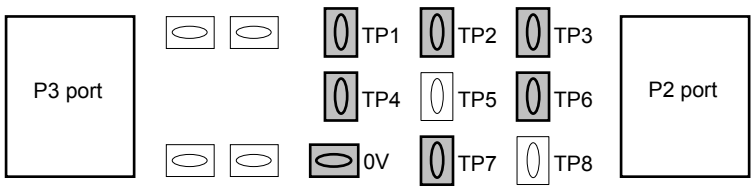

Test Point	Description
TP1	Armature current ± 2.2V ≡ ±200%, (value of CURRENT FEEDBACK diagnostic, Tag No. 298)
TP2	Buffered analog tach ±10V ≡ ±100%, (value of SPEED FEEDBACK diagnostic, Tag No. 207)
TP3	Armature volts ±10V ≡ ±100%, (value of TERMINAL VOLTS diagnostic, Tag No. 57)
TP4	Field current 4V ≡ 100%, (value of FIELD I FBK diagnostic, Tag No. 300)
TP5	*Not used*
TP6	Overcurrent trip 12V to -15V transition on trip
TP7	PEEK software (Parker SSD Drives use)
TP8	*Not used*
0V	0V

ROUTINE MAINTENANCE AND REPAIR

Caution
Maintenance and repair should only be performed by competent persons using only the recommended spares. Use of incorrect parts may create a hazard and risk of injury.

Routine Maintenance

Periodically inspect the Converter for build-up of dust or obstructions that may affect ventilation of the unit. Remove this using dry air.

Repair

There are no user-serviceable components.

IMPORTANT: MAKE NO ATTEMPT TO REPAIR THE UNIT - RETURN IT TO PARKER SSD DRIVES.

Saving Your Application Data

The Converter retains saved settings during power-down. You can download and upload this back into the repaired unit, if necessary. You may, depending upon your knowledge of the fault, attempt the back-up of your application data now, refer to Chapter 5: “The Man-Machine Interface (MMI)” - Copying an Application.

If the fault clearly lies within the MMI, then return the unit for repair.

Returning the Unit to Parker SSD Drives

Please have the following information available:

- The model and serial number - see the unit’s rating label
- Details of the fault
- Complete the “Technical Support Checks” detailed over the page (if electrically competent)

Contact your nearest Parker SSD Drives Service Centre to arrange return of the item.

You will be given a *Returned Material Authorisation.* Use this as a reference on all paperwork you return with the faulty item. Pack and despatch the item in the original packing materials; or at least an antistatic enclosure. Do not allow packaging chips to enter the unit.

Disposal

This product contains materials which are consignable waste under the Special Waste Regulations 1996 which complies with the EC Hazardous Waste Directive - Directive 91/689/EEC.

We recommend you dispose of the appropriate materials in accordance with the valid environmental control laws. The following table shows which materials can be recycled and which have to be disposed of in a special way.{xe "Disposal" \f □}

Material	Recycle	Disposal
metal	yes	no
plastics material	yes	no
printed circuit board	no	yes

The printed circuit board should be disposed of in one of two ways:

1. High temperature incineration (minimum temperature 1200°C) by an incinerator authorised under parts A or B of the Environmental Protection Act
2. Disposal in an engineered land fill site that is licensed to take aluminium electrolytic capacitors. Do not dispose of in a land fill site set aside for domestic waste.

Packaging

During transport our products are protected by suitable packaging. This is entirely environmentally compatible and should be taken for central disposal as secondary raw material.

Technical Support Checks

The results of the following checks will be very useful to Parker SSD Drives' Technical Support.

Caution
Please only attempt these checks if you are electrically competent.

Miscellaneous Checks	✓ or ✗
Check 24V present at Terminals C1 to C9 (C1 is 0V) - dc	
Check ±10V present at Terminals B3 and B4 (B1 is 0V) - dc	
Check auxiliary supply present at Terminals D7 (neutral) & D8 (line), 110/240V ac	
Check the fans rotate, where applicable	

WARNING!
Now isolate the unit completely from all supplies. It may be necessary to remove an armature and field connection to carry out the following checks.

Continuity Test on Fuses Using a Meter	
Check the coding fuses on the power board	
Check the auxiliary fuses etc. (fan fuse, if applicable)	
Diode Check on Power Terminals Using a Meter	✓ or ✗
A+ to L1, L2, L3 and Earth Terminal = Open Circuit	
A- to L1, L2, L3 and Earth Terminal = Open Circuit	
Internal Field Check Using a Meter	✓ or ✗
All the coding fuses must be OK before continuing with the following checks since the fuses are in the circuit.	
-ve to L1 & +ve to D3 = Diode Drop (approximately 0.5V)	
-ve to L2 & +ve to D3 = Diode Drop (approximately 0.5V)	
-ve to D4 & +ve to D3 = Diode Drop (approximately 0.5V)	
-ve to L1 & +ve to D4 = Open Circuit	
-ve to L2 & +ve to D4 = Open Circuit	
External Field Check Using a Meter	✓ or ✗
-ve to D1 & +ve to D3 = Diode Drop (approximately 0.5V)	
-ve to D2 & +ve to D3 = Diode Drop (approximately 0.5V)	
-ve to D4 & +ve to D3 = Diode Drop (approximately 0.5V)	
-ve to D1 & +ve to D4 = Open Circuit	
-ve to D2 & +ve to D4 = Open Circuit	

Make a note of the Serial No. and Model No.

Serial No.		**Model No.**	

Re-establish all connections. All terminals should be secure and not over-torqued.

CONTROL LOOPS

Principle of Operation

Note: *Selection between Current Control or Speed Control (default) is made by the I DMD ISOLATE (current demand isolate) parameter using Digital I/P3 (Terminal C8). If ENABLED the Converter operates as a current controller, and if DISABLED (the default) it operates as a speed controller.*

MMI Menu Map

1 SETUP PARAMETERS
2 CURRENT LOOP
I DMD ISOLATE

Current Loop

The current loop accepts a demand from either the speed loop, or directly from the plant, and forms an error signal which is the difference between demand and average value of feedback. The error signal is fed into a Proportional + Integral compensator which produces the output of the current loop, i.e. the firing angle signal.

In the Converter, the error signal is created in two different forms:

1. The *average* error is computed as the difference between demand and average value of feedback and fed into the Integral part of the P + I algorithm.
2. The *instantaneous* error is computed as the difference between demand and instantaneous value of feedback and is fed into the Proportional part of the P + I algorithm. This gives higher transient performance since it does not contain any time lag, unlike the average which has a built-in lag of 1/6 of mains cycle. However, the average is the true measurement of torque which is the objective of the current control and this is not affected by the small time lag in achieving zero steady-state error.

The firing angle signal is translated into a certain time delay from the mains zero cross point (obtained via a Phase-Lock-Loop) and this results in a firing command being issued to the thyristor stack every 1/6 of a mains cycle in steady-state.

Some special features of the current controller are discussed separately below.

Adaptive Current Control

The gain of a thyristor 6-pulse converter (voltage-time area over firing angle) drops dramatically at discontinuous values of armature current. Therefore a gain boost is required in the current controller to compensate for that.

In the Converter, this is handled by an adaptive algorithm which allows the current to follow the demand in one step (firing) within the discontinuous region of operation.

Back EMF (BEMF) Estimate

With the motor at standstill, the firing angle for zero current is 120 degrees. When the motor is rotating at different speeds the firing angle for zero current follows a cosine locus.

It is of paramount importance to track this locus as close as possible throughout the speed range if the current loop bandwidth is to be maintained at its highest possible level during current reversals from master to slave bridge and visa-versa.

There are two reasons for the loss of bandwidth at current reversals.

Firstly, the loss of converter gain needs to be compensated in an accurate way which is the objective of the adaptive algorithm.

Secondly, the above algorithm also relies on the right start-up value of firing angle in the incoming bridge in order to minimise both the "dead-time" (time interval of zero current referred to below) as well as the rise time to the required current demand.

In order to get the right start-up value of firing angle the knowledge of the operating BEMF is necessary. In the Converter, this is achieved by a combination of a hardware peak current detector and appropriate software algorithm.

Bridge Changeover Delay

The bridge changeover "dead-time", i.e. time interval of zero current, is programmable from 1 to 1500 (via Reserved Menu) with a default value of 1.

For values from 1 to 6:

The delay can be set at multiples of 1/6 mains period, i.e. max. 6 x 3.33 = 20ms at 50Hz. This is relevant for use with large power converters where it is advisable to allow more time for snubber currents to subside before reversal is enabled. It is also relevant for motors with very large armature inductance where zero current detection is more sensitive and therefore a "factor of safety" in the bridge changeover delay is advisable.

For values from 7 to 1500:

The delay corresponds to 7 x 1.33µs up to 1500 x 1.33µs = 2ms maximum.

Manual Tuning

Note: *This procedure is rarely used or required, if possible use Autotune.*

You may need to perform a manual tuning as Autotune does have two limitations:

1. It requires the field to be switched off and therefore the shaft will need clamping when autotuning a permanent-magnet motor or very rarely with a wound-field motor of relatively high permanent magnetism.
2. Part 1 of Autotune determines the discontinuous to continuous boundary level, i.e. the average value at which the armature current becomes "just" continuous. This is achieved by automatically disabling the field and advancing the firing angle at small steps until the slope of the current "envelope" changes substantially indicating continuous region of operation.

   Part 2 of Autotune applies a step change in the current demand within the continuous region as determined by Part 1. When the current feedback approaches the final settling value within 1 to 2 steps, the autotune function terminates and returns the "FIELD ENABLE" to its previous state. The P & I gains and the value of discontinuous boundary current should then be saved.

   If the value of boundary current (Part 1) is very high (larger than 150% or so), then the Autotune Part 2 step change will be in the region above 200% which might result in overcurrent trip. In this case it is advisable to set the I gain to a large enough value (typically 10) to give fast response throughout the discontinuous region, a low value for the P gain (typically 1, not important since there is no effective armature time constant in the discontinuous region to compensate for) and finally eliminate the adaptive mode by setting "Discontinuous" to zero. At the same time though, one must disable the Missing Pulse alarm; this is activated when the load current is above the "Discontinuous" level and in this case it would give erroneous trips if left enabled. In order to disable this alarm the special "super-password" reserved for Parker SSD Drives personnel needs to be entered. Next in the "Reserved" menu, which will then appear as a submenu of "SYSTEM", a parameter called "Health Inhibit" should be set to the hexadecimal value 0x002.

The above suggestion assumes that the current limit will prevent the motor from operating in the continuous region, i.e. above 150% in the example above. If this is not the case, as for example when the current limit is set at 200%, then a manual tuning will be necessary.

Set the DISCONTINUOUS parameter to the correct value by disabling or disconnecting the field, set the current limit to zero and start the drive. Gradually increase the current limit observing the current feedback waveform (see Diagnostics below) on an oscilloscope beam. When the pulses "just come together", with no zero interval between them, read the value of current limit (or indeed current demand) and set the DISCONTINUOUS parameter to this value. If this value is very high (above the current limit), then it should be set to zero and follow the suggestion in **2** above. In this case the drive will not perform any adaption in the discontinuous region, so some loss in performance may be noticed in the current loop response.

Subsequently either

- a squarewave signal should be applied to the current demand input (Terminal A3) with Current Demand Isolate (terminal C8) on
- or "toggle" between two values of current limit into terminal A6 and operate in normal speed loop mode.

Ideally this input signal should be offset above the Discontinuous level, such that the drive is operating in the continuous current region. Then you could increase the value of I gain to give a fast rise with no more than 10% overshoot and subsequently increase the P gain towards critically damped response, i.e. practically no overshoot.

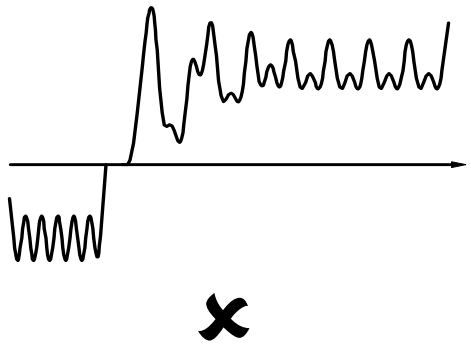

Current Loop controls incorrectly set. Integral Time Constant too short increase Current Loop Integral Time Constant

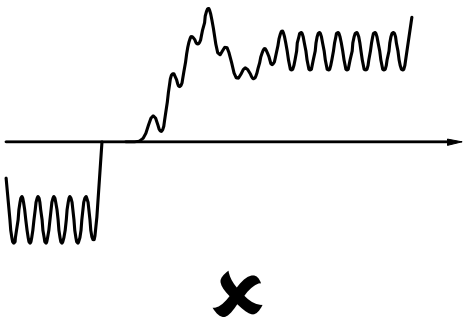

Current Loop controls incorrectly set. Proportional Gain too low - increase Current Loop Proportional Gain

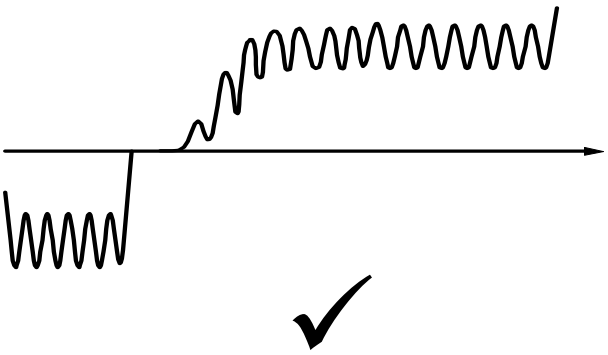

Current Loop response correctly adjusted.

Tuning Hints

If the I gain is too high, the response will be underdamped (overshoot will be excessive with long oscillatory settling). If the I gain is too low, the response will be overdamped (long exponential rise).

With the I gain optimally set, if the P gain is too low the response will be overdamped. If P is too high the response will revert to underdamped with the tendency to go totally unstable.

Diagnostics

The diagnostic point for "real" armature current is the first (left-hand side) test point below the calibration panel. This will give 1.1V average for 100% current. It will also give the operating bridge, i.e. it will be negative for the Master bridge (positive current demand) and positive for the Slave bridge (negative current demand).

Speed Loop

The speed loop accepts a demand from either an outside loop (i.e. position loop) or directly from the plant and forms the error signal which is the difference between demand and feedback. The error signal is fed into a Proportional + Integral compensator which produces the output of the speed loop, i.e. the current demand signal.

The integral gain is translated into a Time Constant (secs) in the MMI which defines more clearly the function of the compensator against a certain load time constant.

Speed Loop Synchronised with Current Loop

The proportional part of the P+I algorithm is executed immediately before each run of the current loop, thus ensuring minimum time lag and therefore maximum bandwidth.

Combined Analog Tacho / Encoder Feedback

By using the analog tacho f/b on the Proportional part of the P + I algorithm and the encoder f/b on the Integral part (using similar principle as in the current loop), the Converter combines maximum transient response with the increased steady-state accuracy of the digital feedback.

Current Demand Rate Limit (di/dt)

Access to the di/dt limit is currently reserved for Parker SSD Drives personnel only in the Reserved Menu.

This is a limit imposed on the rate of change of the current demand. It is to be used for motors with commutation limitations, mechanical systems that cannot absorb rapid torque transients and also as a means of limiting current overshoot for large current swings (e.g. 0 ➠ 200%). The default value is set at 35% (i.e. maximum allowable change is 35% of FLC in 1/6 mains cycle) which has no practical effect on the current response between 0 and 100%.

Field Control

Set-up Notes

The setting of the P + I gains for the current controller is done manually in much the same way as described in Chapter 4: “Current Loop - Manual Tuning”, and one convenient way is to switch several times from "quench" to "standby" mode and observe the current response 0 ➠ 50% for rise time and overshoot.

The setting of the field weakening gains is achieved by observing the armature voltage feedback for overshoot and settling time. The EMF GAIN parameter defaults to 0.30 (real gain of 30) and normally lies in the region 0.20 to 0.70 (larger settings normally lead to instability). The EMF LEAD parameter should be set at around the time constant for the field current loop. It defaults to 2.00 (200ms). Finally, the EMF LAG parameter defaults to 40.00 (4000ms) and it should generally lie in the region of 10 to 50 times the "emf lead".

The tuning of the field weakening loop is also very dependent on the acceleration rate through base speed and visa-versa. If armature voltage overshoot is a problem for rapid acceleration rates, then the use of the "feedback lead/lag" compensator is recommended to limit the overshoot as discussed above. If not, then the default values for the above bemf fbk gains are recommended (i.e. disabled) which will probably allow further increase in the forward path transfer function gains ("emf gain" and "emf lead") for faster field response.

In summary, the increased attenuation at the higher frequencies will allow an increase in the gain whilst maintaining the desired phase margin. Bearing in mind that the negative angle of the compensator lowers the angle curve, in order to maintain the desired phase margin (45 to 60 degrees) a reduction in the phase-margin frequency is required. This is the frequency at which the log magnitude curve crosses the 0db line. Since the phase-margin frequency is indicative of the speed of response of the system, its reduction should be kept to a minimum. This is achievable by trying to keep the value of the corner-frequency 1 / T1 as low as possible by setting T1 at values greater than 100ms or so. The upper limit for T1 will be dictated by the settling time requirement.

Current Control

The field current loop can accept a demand directly from the plant and/or an outside field weakening loop and forms the error signal which is the difference between demand and feedback. The error signal is fed into a P + I compensator which produces the output of the field loop, i.e. the field firing angle signal.

The firing angle signal is translated into a certain time delay from the mains zero cross point (obtained via the same Phase-Lock-Loop as for the armature) and this results into a firing command being issued to the field bridge every 1/2 of a mains cycle in steady-state.

Voltage Control

This offers the facility of an open-loop voltage control for motors which do not provide in the nameplate the field current rating. The field voltage is controlled by the specified RATIO OUT/IN which defaults to 90%. This is the maximum dc Volts that can be obtained for a given ac RMS input in a single-phase rectifier, i.e. 370V dc for 415V ac supply. The specified ratio determines directly the firing angle at which the controller operates and therefore the thermal effects on the field resistance as well as mains voltage variations are not compensated for. It is also worth noting that in this mode the field overcurrent alarm is not active (since there is no current scaling) and therefore this mode is not recommended for use with supplies much greater than the field voltage rating.

Field Weakening

The field weakening loop accepts a demand for MAX VOLTS (default 100%) and forms the error signal which is the difference between demand and arm. volts feedback. The error signal is fed into a Lead/Lag compensator which produces the output of the field weakening loop, i.e. the field weakening demand. This gets subtracted from the field setpoint (default 100%) to produce the field demand into the field current loop. A MIN FLD CURRENT parameter (default 10%) limits the minimum level in the field weakening region.

The Lead/Lag compensator has a dc gain ("emf gain" = Kp), a lead time constant ("emf lead" = T1) and a lag time constant ("emf lag" = T2).

Note: *Field weakening is not possible when running with Armature Volts feedback. Although field weakening can be "enabled" in this instance, a software interlock clamps the field demand at 100% and will not allow the field weakening to reduce it.*

Lead/Lag

The slight disadvantage of Lead/Lag { transfer function = Kp * (1+sT1) / (1+sT2) } versus P + I { transfer function = Kp * (1+sT) / sT } is that the DC gain is not "infinity" and therefore there is a "finite" steady-state error. This is kept sufficiently small for values of "emf gain" > 0.20 (i.e. real 20).

The advantage of the Lead/Lag is that it allows greater attenuation at higher frequencies. The high frequency gain is Kp T1 / T2 and therefore by keeping the ratio T2 / T1 high (generally at values above 10) the log magnitude is reduced by 20log(T2/T1) for frequencies above 1 / T1.

An extra feedback lead/lag compensator has been added into the arm. volts f/b to minimise the overshoot in volts. This is particularly useful when accelerating fast through base speed and therefore increasing the motor bemf at a faster rate than the field current can possibly weaken, due to the normally large field time constant. The ratio of "bemf fbk lead" / "bemf fbk lag" should always be greater than 1 to give a "lead" function to allow the field to start weakening early enough. However, it is not recommended to raise the ratio much higher than 2 to 3 times, otherwise instability will start creeping in. The absolute setting of the above parameters in milliseconds depends on the overall field time constant. The default value is set to 1 (100ms / 100ms) which means that the function is disabled.

Standby Field

When the armature current gets quenched, a timer starts timing-out and after a certain delay ("fld quench delay") it will either quench the field totally ("fld quench mode" = "quench") or will reduce it to 50% of the current or voltage setpoint ("fld quench mode" = "standby"). This applies to both current and voltage modes.

PARAMETER SPECIFICATION TABLE

The headings for the Tag No. table are described below.

Tag	A numeric identification of the parameter. It is used to identify the source and destinations of internal links.
Name	The parameter name as it appears on the MMI.
Function Block	The menu page and function block under which the parameter is stored.
Minimum Value Maximum Value	This varies with parameter type: INT The upper and lower limits of the parameter, indicating the parameter's true, internally-held, number of decimal (a reduced number of digits may be shown by the MMI). BOOL 0 = FALSE, 1 = TRUE TAG The tag number of any parameter (May be set to a negative value indicating a feedback link). WORD 0000 to FFFF (hexadecimal)
ID	Serial Communications Mnemonic: Refer to Chapter 14: "Serial Communications"
Notes	RO Read Only RW Read/Write

Parameter Types:

INT (Signal) fixed point value - 16 bits

BOOL A Boolean (bit) representing FALSE or TRUE

TAG A value representing a choice of TAG

WORD 16 Bit hexadecimal number

Specification Table: Tag Number Order

Tag	(MMI) Name	Function Block	Minimum Value	Maximum Value	Notes
0	Inactive Destination	Unallocated	0	0	RW
1	EEprom Checksum	Unallocated	-	-	-
2	RAMP ACCEL TIME	RAMPS	1	6000	RW
3	RAMP DECEL TIME	RAMPS	1	6000	RW
4	CONSTANT ACCEL	RAMPS	0	1	RW
5	RAMP INPUT	RAMPS	-10500	10500	RW
6	RATIO 1	SETPOINT SUM 1	-30000	30000	RW
7	RATIO 2 (A3)	SPEED LOOP	-30000	30000	RW
8	SIGN 1	SETPOINT SUM 1	0	1	RW
9	SIGN 2 (A3)	SPEED LOOP	0	1	RW
10	ZERO SPD. OFFSET	CALIBRATION	-500	500	RW
11	STANDSTILL LOGIC	STANDSTILL	0	1	RW
12	ZERO THRESHOLD	STANDSTILL	0	10000	RW
13	INT. TIME CONST.	SPEED LOOP	1	30000	RW
14	PROP. GAIN	SPEED LOOP	0	20000	RW
15	CUR.LIMIT/SCALER	CURRENT LOOP	0	20000	RW
16	PROP. GAIN	CURRENT LOOP	0	20000	RW
17	INT. GAIN	CURRENT LOOP	0	20000	RW
18	AUTOTUNE	CURRENT LOOP	0	1	RW
19	FIELD FAIL	INHIBIT ALARMS	0	1	RW
20	ARMATURE V CAL.	CALIBRATION	9800	11000	RW
21	IR COMPENSATION	CALIBRATION	0	10000	RW
22	ENCODER RPM	CALIBRATION	0	6000	RW
23	ANALOG TACH CAL	CALIBRATION	9800	11000	RW
24	ENCODER LINES	CALIBRATION	10	5000	RW
25	ARMATURE I (A9)	CALIBRATION	0	1	RW
26	PROG STOP TIME	STOP RATES	1	6000	RW
27	STOP TIME	STOP RATES	1	6000	RW
28	STALL TRIP	INHIBIT ALARMS	0	1	RW
29	STOP ZERO SPEED	STOP RATES	0	10000	RW
30	ADDITIONAL DEM	CURRENT LOOP	-20000	20000	RW
31	SPD BRK2 (HIGH)	CURRENT PROFILE	0	10000	RW
32	SPD BRK1 (LOW)	CURRENT PROFILE	0	10000	RW
33	IMAX BRK2(SPD2)	CURRENT PROFILE	0	20000	RW
34	FIELD FBKSTOP	RESERVED	0	1000	RW
35	FIELD FFRSTOP	RESERVED	0	10000	RW
36	IFFB DELAY	RESERVED	0	255	RW
37	FULL MENUS	MENUS	0	1	RW
38	MENU DELAY	MENUS	0	65535	RW
39	CONFIGURE ENABLE	CONFIGURE I/O	0	1	RW
40	System I/O Digital	Unallocated	-	-	-
41	SETPOINT 4	SPEED LOOP	-10500	10500	RW
42	AT CURRENT LIMIT	DIAGNOSTICS	0	1	RO
43	MODULUS	DIGITAL OUTPUTS	0	1	RW
44	MODULUS	DIGITAL OUTPUTS	0	1	RW

Tag	(MMI) Name	Function Block	Minimum Value	Maximum Value	Notes
45	MODULUS	DIGITAL OUTPUTS	0	1	RW
46	I Loop Suspended	Unallocated	0	1	RO
47	SPEED FBK SELECT	SPEED LOOP	0	3	RW
48	NEG. I CLAMP	CURRENT LOOP	-10000	10000	RW
49	ENCODER SIGN	SPEED LOOP	0	1	RW
50	ANIN 1 (A2)	DIAGNOSTICS	-10000	10000	RO
51	ANIN 2 (A3)	DIAGNOSTICS	-10000	10000	RO
52	ANIN 3 (A4)	DIAGNOSTICS	-10000	10000	RO
53	ANIN 4 (A5)	DIAGNOSTICS	-10000	10000	RO
54	ANIN 5 (A6)	DIAGNOSTICS	-10000	10000	RO
55	ANOUT 1 (A7)	DIAGNOSTICS	-10000	10000	RO
56	ANOUT 2 (A8)	DIAGNOSTICS	-10000	10000	RO
57	TERMINAL VOLTS	DIAGNOSTICS	-12500	12500	RO
58	Analog Tach Feedback Unfiltered	Unallocated	-	-	RO
59	Encoder Feedback Unfiltered	Unallocated	-	-	RO
60	BACK EMF	DIAGNOSTICS	-15000	15000	RO
61	ACTUAL NEG I LIM	DIAGNOSTICS	-20000	20000	RO
62	Speed Feedback Unfiltered	Unallocated	-	-	RO
63	SPEED SETPOINT	DIAGNOSTICS	-30000	30000	RO
64	Speed Loop Error Unfiltered	Unallocated	-	-	RO
65	Current Feedback Unfiltered	Unallocated	-	-	RO
66	Current Demand Unfiltered	Unallocated	-	-	RO
67	ACTUAL POS I LIM	DIAGNOSTICS	-20000	20000	RO
68	START (C3)	DIAGNOSTICS	0	1	RO
69	DIGITAL INPUT C4	DIAGNOSTICS	0	1	RO
70	DIGITAL INPUT C5	DIAGNOSTICS	0	1	RO
71	DIGIN 1 (C6)	DIAGNOSTICS	0	1	RO
72	DIGIN 2 (C7)	DIAGNOSTICS	0	1	RO
73	DIGIN 3 (C8)	DIAGNOSTICS	0	1	RO
74	DIGOUT 1 (B5)	DIAGNOSTICS	0	1	RO
75	DIGOUT 2 (B6)	DIAGNOSTICS	0	1	RO
76	DIGOUT 3 (B7)	DIAGNOSTICS	0	1	RO
77	AT ZERO SPEED	DIAGNOSTICS	0	1	RO
78	AT ZERO SETPOINT	DIAGNOSTICS	0	1	RO
79	AT STANDSTILL	DIAGNOSTICS	0	1	RO
80	PROGRAM STOP	DIAGNOSTICS	0	1	RO
81	SPEED FBK ALARM	INHIBIT ALARMS	0	1	RW
82	DRIVE START	DIAGNOSTICS	0	1	RO
83	Main Contactor	Unallocated	0	1	RO
84	DRIVE ENABLE	DIAGNOSTICS	0	1	RO
85	RAMP OUTPUT	DIAGNOSTICS	-10000	10000	RO
86	SPT SUM 1 OUTPUT	DIAGNOSTICS	-20000	20000	RO
87	POS. I CLAMP	DIAGNOSTICS	-20000	20000	RO
88	NEG. I CLAMP	DIAGNOSTICS	-20000	20000	RO
89	SPEED DEMAND	DIAGNOSTICS	-10500	10500	RO
90	BIPOLAR CLAMPS	CURRENT LOOP	0	1	RW
91	PROG STOP I LIM	STOP RATES	0	20000	RW
92	ENCODER ALARM	INHIBIT ALARMS	0	1	RW

10-4 Parameter Specification Table

Tag	(MMI) Name	Function Block	Minimum Value	Maximum Value	Notes
93	IMAX BRK1(SPD1)	CURRENT PROFILE	0	20000	RW
94	AUX DIGOUT 1	AUX I/O	0	1	RW
95	AUX DIGOUT 2	AUX I/O	0	1	RW
96	AUX DIGOUT 3	AUX I/O	0	1	RW
97	SOURCE TAG	DIGOUT 1 (B5)	0	499	RW
98	SOURCE TAG	DIGOUT 2 (B6)	0	499	RW
99	SOURCE TAG	DIGOUT 3 (B7)	0	499	RW
100	INPUT 1	SETPOINT SUM 1	-20000	20000	RW
101	MIN BS DEAD TIME	RESERVED	0	6000	RW
102	DESTINATION TAG	DIGIN 1 (C6)	0	499	RW
103	VALUE FOR TRUE	DIGIN 1 (C6)	-30000	30000	RW
104	VALUE FOR FALSE	DIGIN 1 (C6)	-30000	30000	RW
105	DESTINATION TAG	DIGIN 2 (C7)	0	499	RW
106	VALUE FOR TRUE	DIGIN 2 (C7)	-30000	30000	RW
107	VALUE FOR FALSE	DIGIN 2 (C7)	-30000	30000	RW
108	DESTINATION TAG	DIGIN 3 (C8)	0	499	RW
109	VALUE FOR TRUE	DIGIN 3 (C8)	-30000	30000	RW
110	VALUE FOR FALSE	DIGIN 3 (C8)	-30000	30000	RW
111	5703 RCV ERROR	INHIBIT ALARMS	0	1	RW
112	STALL TRIP	DIAGNOSTICS	0	1	RO
113	RAMPING	DIAGNOSTICS	0	1	RO
114	Alarm Sequence State	Unallocated	-	-	RO
115	HEALTH WORD	INHIBIT ALARMS	0	FFFF	RO
116	HEALTH STORE	INHIBIT ALARMS	0	FFFF	RO
117	Health Inhibit Diagnostic	Unallocated	0	FFFF	RO
118	RAMP HOLD	RAMPS	0	1	RW
119	I DMD. ISOLATE	CURRENT LOOP	0	1	RW
120	ENTER PASSWORD	PASSWORD	0	FFFF	RW
121	CHANGE PASSWORD	PASSWORD	0	FFFF	RW
122	Health Flag (Led)	Unallocated	0	1	RO
123	PEEK DATA	PEEK	24	FFFF	RW
124	PEEK SCALE	PEEK	0	65535	RW
125	Ready Flag	Unallocated	0	1	RO
126	MIN SPEED	RAMPS	0	10000	RW
127	Dump Enable	Unallocated	0	1	RW
128	ANOUT 1	AUX I/O	-10000	10000	RW
129	ANOUT 2	AUX I/O	-10000	10000	RW
130	MODE	P3 SETUP	0	4	RW
131	DEADBAND WIDTH	SETPOINT SUM 1	0	10000	RW
132	SETPT. RATIO	5703 SUPPORT	-30000	30000	RW
133	SETPT. SIGN	5703 SUPPORT	0	1	RW
134	SOURCE TAG	CONFIGURE 5703	0	499	RW
135	DESTINATION TAG	CONFIGURE 5703	0	499	RW
136	FEED FORWARD	CURRENT LOOP	10	5000	RW
137	DISCONTINUOUS	CURRENT LOOP	0	20000	RW
138	GROUP ID (GID)	MAIN PORT (P1)	0	7	RW
139	UNIT ID (UID)	MAIN PORT (P1)	0	15	RW
140	GROUP ID (GID)	AUX PORT (P2)	0	7	RW

Tag	(MMI) Name	Function Block	Minimum Value	Maximum Value	Notes
141	UNIT ID (UID)	AUX PORT (P2)	0	15	RW
142	PNO. 7	MAIN PORT (P1)	0	FFFF	RW
143	PNO. 7	AUX PORT (P2)	0	FFFF	RW
144	CHANGEBAND (BIN)	MAIN PORT (P1)	0	32767	RW
145	CHANGEBAND (BIN)	AUX PORT (P2)	0	32767	RW
146	SRL LINK ENABLE	MAIN PORT (P1)	0	1	RW
147	SRL LINK ENABLE	AUX PORT (P2)	0	1	RW
148	PROTOCOL	MAIN PORT (P1)	0	1	RW
149	PROTOCOL	AUX PORT (P2)	0	1	RW
150	BAUD RATE	MAIN PORT (P1)	300	19200	RW
151	BAUD RATE	AUX PORT (P2)	300	19200	RW
152	ESP SUP. (ASCII)	MAIN PORT (P1)	0	1	RW
153	ESP SUP. (ASCII)	AUX PORT (P2)	0	1	RW
154	II	RESERVED	0	FFFF	RW
155	Serial Link Version Number	Unallocated			
156	Config info	Unallocated			
157	Block Length	Unallocated			
158	ERROR REPORT	MAIN PORT (P1)	-	-	RW
159	ERROR REPORT	AUX PORT (P2)	-	-	RW
160	Mode N°	Unallocated			
161	AUX START	AUX I/O	0	1	RW
162	MIN MMI CYCLE TM	RESERVED	0	65535	RW
163	ILOOP PI MODE	RESERVED	0	2	RW
164	TOGGLE PERIOD	RESERVED	0	FFFF	RW
165	TOGGLE REF 1	RESERVED	-30000	30000	RW
166	SEL. INT/CUR/SPD	RESERVED	0	4	RW
167	TOGGLE REF 2	RESERVED	-30000	30000	RW
168	AUX ENABLE	AUX I/O	0	1	RW
169	FIELD ENABLE	DIAGNOSTICS	0	1	RO
170	FIELD ENABLE	FIELD CONTROL	0	1	RW
171	SETPOINT	FLD CURRENT VARS	0	10000	RW
172	INT. GAIN	FLD CURRENT VARS	0	10000	RW
173	PROP. GAIN	FLD CURRENT VARS	0	10000	RW
174	FLD. WEAK ENABLE	FLD WEAK VARS	0	1	RW
175	EMF LEAD	FLD WEAK VARS	10	5000	RW
176	EMF LAG	FLD WEAK VARS	0	20000	RW
177	EMF GAIN	FLD WEAK VARS	0	10000	RW
178	MAX VOLTS	FLD WEAK VARS	0	10000	RW
179	MIN FLD CURRENT	FLD WEAK VARS	0	10000	RW
180	SPDFBK ALM LEVEL	CALIBRATION	0	10000	RW
181	Field Current Feedback Unfiltered	Unallocated			
182	FIELD I CAL.	CALIBRATION	9800	11000	RW
183	FIELD DEMAND	DIAGNOSTICS	0	10000	RO
184	FLD.FIRING ANGLE	DIAGNOSTICS	0	180	RO
185	FLD QUENCH DELAY	FIELD CONTROL	0	6000	RW
186	FLD. QUENCH MODE	FIELD CONTROL	0	1	RW
187	5703 INPUT	SYSTEM PORT P3	-30000	30000	RW
188	OVER SPEED LEVEL	CALIBRATION	0	20000	RW

10-6 Parameter Specification Table

Tag	(MMI) Name	Function Block	Minimum Value	Maximum Value	Notes
189	5703 OUTPUT	SYSTEM PORT P3	-30000	30000	RO
190	PEAK HW SLOPE	RESERVED	0	65535	RW
191	BEMF FBK LEAD	FLD WEAK VARS	10	5000	RW
192	BEMF FBK LAG	FLD WEAK VARS	10	5000	RW
193	TICK LENGTH	RESERVED	0	65535	RO
194	DISC ADAPT POT	RESERVED	0	10000	RW
195	THRESHOLD (>)	DIGOUT 1 (B5)	-30000	30000	RW
196	THRESHOLD (>)	DIGOUT 2 (B6)	-30000	30000	RW
197	THRESHOLD (>)	DIGOUT 3 (B7)	-30000	30000	RW
198	P3 BAUD RATE	P3 SETUP	300	57600	RW
199	DELAY	INVERSE TIME	1	6000	RW
200	RATE	INVERSE TIME	1	6000	RW
201	REGEN MODE	CURRENT LOOP	0	1	RW
202	INT. DEFEAT	SPEED LOOP	0	1	RW
203	INVERSE TIME O/P	DIAGNOSTICS	0	20000	RO
204	AIMING POINT	INVERSE TIME	0	20000	RW
205	dI/dt	RESERVED	0	20000	RW
206	ENCODER	DIAGNOSTICS	0	6000	RO
207	SPEED FEEDBACK	DIAGNOSTICS	-30000	30000	RO
208	RATIO 0	SETPOINT SUM 1	-30000	30000	RW
209	FLD CTRL MODE IS	FIELD CONTROL	0	1	RW
210	RATIO OUT/IN	FLD VOLTAGE VARS	0	10000	RW
211	HEALTH INHIBIT	RESERVED	0	FFFF	RW
212	OPERATING MODE	DIAGNOSTICS	0	7	RO
213	ZERO CUR OFFSET	RESERVED	0	65535	RW
214	ZCD THRESHOLD	RESERVED	0	65535	RW
215	G&L Power Meter	Unallocated			
216	PROG STOP LIMIT	STOP RATES	0	6000	RW
217	STOP LIMIT	STOP RATES	0	6000	RW
218	JOG SPEED 1	JOG/SLACK	-10000	10000	RW
219	JOG SPEED 2	JOG/SLACK	-10000	10000	RW
220	12 BIT DAC	RESERVED	0	1	RW
221	MMI FILTER T.C.	RESERVED	0	65535	RW
222	PRED STEP	RESERVED	0	65535	RW
223	SCAN THRESHOLD	RESERVED	0	65535	RW
224	STALL TRIP DELAY	CALIBRATION	1	6000	RW
225	CRAWL SPEED	JOG/SLACK	-10000	10000	RW
226	PEAK HW OFFSET	RESERVED	0	20000	RW
227	AUX JOG	AUX I/O	0	1	RW
228	MODE	JOG/SLACK	0	1	RW
229	PRECSN/RESTR CHK	RESERVED	0	3	RW
230	CALIBRATION	ANIN 1 (A2)	-30000	30000	RW
231	MAX VALUE	ANIN 1 (A2)	-30000	30000	RW
232	MIN VALUE	ANIN 1 (A2)	-30000	30000	RW
233	CALIBRATION	ANIN 2 (A3)	-30000	30000	RW
234	MAX VALUE	ANIN 2 (A3)	-30000	30000	RW
235	MIN VALUE	ANIN 2 (A3)	-30000	30000	RW
236	CALIBRATION	ANIN 3 (A4)	-30000	30000	RW

Tag	(MMI) Name	Function Block	Minimum Value	Maximum Value	Notes
237	MAX VALUE	ANIN 3 (A4)	-30000	30000	RW
238	MIN VALUE	ANIN 3 (A4)	-30000	30000	RW
239	CALIBRATION	ANIN 4 (A5)	-30000	30000	RW
240	MAX VALUE	ANIN 4 (A5)	-30000	30000	RW
241	MIN VALUE	ANIN 4 (A5)	-30000	30000	RW
242	CALIBRATION	ANIN 5 (A6)	-30000	30000	RW
243	MAX VALUE	ANIN 5 (A6)	-30000	30000	RW
244	MIN VALUE	ANIN 5 (A6)	-30000	30000	RW
245	% TO GET 10V	ANOUT 1 (A7)	-30000	30000	RW
246	DESTINATION TAG	ANIN 1 (A2)	0	499	RW
247	DESTINATION TAG	ANIN 5 (A6)	0	499	RW
248	% TO GET 10V	ANOUT 2 (A8)	-30000	30000	RW
249	DESTINATION TAG	ANIN 3 (A4)	0	499	RW
250	DESTINATION TAG	ANIN 4 (A5)	0	499	RW
251	SOURCE TAG	ANOUT 1 (A7)	0	499	RW
252	SOURCE TAG	ANOUT 2 (A8)	0	499	RW
253	TAKE UP 1	JOG/SLACK	-10000	10000	RW
254	TAKE UP 2	JOG/SLACK	-10000	10000	RW
255	RESET VALUE	RAISE/LOWER	-30000	30000	RW
256	INCREASE RATE	RAISE/LOWER	1	6000	RW
257	DECREASE RATE	RAISE/LOWER	1	6000	RW
258	MIN VALUE	RAISE/LOWER	-30000	30000	RW
259	MAX VALUE	RAISE/LOWER	-30000	30000	RW
260	Raise/Lower Dest	Unallocated	0	499	RW
261	RAISE INPUT	RAISE/LOWER	0	1	RW
262	LOWER INPUT	RAISE/LOWER	0	1	RW
263	STALL THRESHOLD	CALIBRATION	0	20000	RW
264	RAISE/LOWER O/P	DIAGNOSTICS	-30000	30000	RO
265	ANALOG IP OFFSET	RESERVED	-30000	30000	RW
266	% S-RAMP	RAMPS	0	10000	RW
267	Position Count	Unallocated	0	FFFF	RW
268	MODE	ADAPTION	0	3	RW
269	SPD BRK1 (LOW)	ADAPTION	0	10000	RW
270	SPD BRK2 (HIGH)	ADAPTION	0	10000	RW
271	PROP. GAIN	ADAPTION	0	20000	RW
272	INT. TIME CONST.	ADAPTION	1	30000	RW
273	POS. LOOP P GAIN	ADVANCED	-20000	20000	RW
274	I GAIN IN RAMP	ADVANCED	0	20000	RW
275	Position Count Divider	Unallocated	0	30000	RW
276	PLL PROP	RESERVED	0	20000	RW
277	PLL INT	RESERVED	0	20000	RW
278	PLL Error	Unallocated	-	-	RO
279	ARM ENDSTOP	RESERVED	0	20000	RW
280	HF C/O DISC GAIN	RESERVED	0	20000	RW
281	HF FILTER T.C.	RESERVED	0	20000	RW
282	BEMF THRESHOLD	RESERVED	0	20000	RW
283	SCAN TC	RESERVED	0	20000	RW
284	ZERO SPD. LEVEL	ZERO SPD. QUENCH	0	20000	RW

10-8 Parameter Specification Table

Tag	(MMI) Name	Function Block	Minimum Value	Maximum Value	Notes
285	ZERO IAD LEVEL	ZERO SPD. QUENCH	0	20000	RW
286	RAMPING THRESH.	RAMPS	0	10000	RW
287	AUTO RESET	RAMPS	0	1	RW
288	EXTERNAL RESET	RAMPS	0	1	RW
289	SETPOINT 1	SPEED LOOP	-10500	10500	RW
290	SETPOINT 2 (A3)	SPEED LOOP	-10500	10500	RO
291	SETPOINT 3	SPEED LOOP	-10500	10500	RW
292	SIGN 0	SETPOINT SUM 1	0	1	RW
293	Ramp O/P Dest	Unallocated	0	499	RW
294	SPT Sum 1 Dest	Unallocated	0	499	RW
295	User Filter Input	Unallocated	-30000	30000	RW
296	User Filter Output	Unallocated	-30000	30000	RO
297	SPEED ERROR	DIAGNOSTICS	-30000	30000	RO
298	CURRENT FEEDBACK	DIAGNOSTICS	-30000	30000	RO
299	CURRENT DEMAND	DIAGNOSTICS	-30000	30000	RO
300	FIELD I FBK.	DIAGNOSTICS	-30000	30000	RO
301	POS. I CLAMP	CURRENT LOOP	-10000	10000	RW
302	CONTACTOR DELAY	STOP RATES	1	6000	RW
303	OPTION VERSION	MAIN PORT P1	0.00	99.99	RO
304	LANGUAGE	MENUS	0	1	RW
305	TRIP RESET	INHIBIT ALARMS	0	1	RW
306	SOURCE TAG	STANDSTILL	0	499	RW
307	EXTERNAL RESET	RAISE/LOWER	0	1	RW
308	TACH INPUT (B2)	DIAGNOSTICS	-30000	30000	RO
309	INPUT 0	SETPOINT SUM 1	-20000	20000	RW
310	AUTOCAL	RESERVED	0	1	RW
311	IAINST OFFSET	RESERVED	0	20000	RW
312	PNO 112	PNO CONFIG	0	499	RW
313	PNO 113	PNO CONFIG	0	499	RW
314	PNO 114	PNO CONFIG	0	499	RW
315	PNO 115	PNO CONFIG	0	499	RW
316	PNO 116	PNO CONFIG	0	499	RW
317	PNO 117	PNO CONFIG	0	499	RW
318	PNO 118	PNO CONFIG	0	499	RW
319	PNO 119	PNO CONFIG	0	499	RW
320	PNO 120	PNO CONFIG	0	499	RW
321	PNO 121	PNO CONFIG	0	499	RW
322	PNO 122	PNO CONFIG	0	499	RW
323	PNO 123	PNO CONFIG	0	499	RW
324	PNO 124	PNO CONFIG	0	499	RW
325	PNO 125	PNO CONFIG	0	499	RW
326	PNO 126	PNO CONFIG	0	499	RW
327	PNO 127	PNO CONFIG	0	499	RW
328	ESP SUP. (ASCII)	SYSTEM PORT P3	0	1	RW
329	GROUP ID (GID)	SYSTEM PORT P3	0	7	RW
330	UNIT ID (UID)	SYSTEM PORT P3	0	15	RW
331	CHANGEBAND (BIN)	SYSTEM PORT P3	0	32767	RW
332	ERROR REPORT	SYSTEM PORT P3	-	-	RW

Tag	(MMI) Name	Function Block	Minimum Value	Maximum Value	Notes
333	PNO. 7	SYSTEM PORT P3	0	FFFF	RW
334	PARITY	MAIN PORT (P1)	0	1	RW
335	DISABLE MEAN FEEDBACK	RESERVED	0	1	RW
336	CHANGEOVER BIAS	RESERVED	-	-	RW
337	Thermistor State (Warning)	Unallocated	0	1	RO
338	P3 State (Warning)	Unallocated	0	1	RO
339	VALUE 1	miniLINK	-30000	30000	RW
340	VALUE 2	miniLINK	-30000	30000	RW
341	VALUE 3	miniLINK	-30000	30000	RW
342	VALUE 4	miniLINK	-30000	30000	RW
343	VALUE 5	miniLINK	-30000	30000	RW
344	VALUE 6	miniLINK	-30000	30000	RW
345	VALUE 7	miniLINK	-30000	30000	RW
346	LOGIC 1	miniLINK	0	1	RW
347	LOGIC 2	miniLINK	0	1	RW
348	LOGIC 3	miniLINK	0	1	RW
349	LOGIC 4	miniLINK	0	1	RW
350	LOGIC 5	miniLINK	0	1	RW
351	LOGIC 6	miniLINK	0	1	RW
352	LOGIC 7	miniLINK	0	1	RW
353	LOGIC 8	miniLINK	0	1	RW
354	EEprom Write	Unallocated	0	2	RW
355	RAMP RATE	JOG/SLACK	1	6000	RW
356	Speed Loop Output	Unallocated	-20000	20000	RO
357	MAX DEMAND	SPEED LOOP	0	10500	RW
358	MIN DEMAND	SPEED LOOP	-10500	0	RW
359	INVERTED	DIGOUT 1 (B5)	0	1	RW
360	INVERTED	DIGOUT 2 (B6)	0	1	RW
361	INVERTED	DIGOUT 3 (B7)	0	1	RW
362	MODULUS	ANOUT 1 (A7)	0	1	RW
363	MODULUS	ANOUT 2 (A8)	0	1	RW
364	SOURCE TAG	LINK 1	0	499	RW
365	DESTINATION TAG	LINK 1	0	499	RW
366	SOURCE TAG	LINK 2	0	499	RW
367	DESTINATION TAG	LINK 2	0	499	RW
368	SOURCE TAG	LINK 3	0	499	RW
369	DESTINATION TAG	LINK 3	0	499	RW
370	SOURCE TAG	LINK 4	0	499	RW
371	DESTINATION TAG	LINK 4	0	499	RW
372	Raise Lower Delta	Unallocated	-	-	RO
373	System Ramp Delta	Unallocated	-	-	RO
374	System Reset	Unallocated	0	1	RO
375	LIMIT	SETPOINT SUM 1	0	20000	RW
376	Running	Unallocated	0	1	RO
377	UDP Length	Unallocated	-	-	RW
378	UDP base	Unallocated	-	-	RW
379	VALUE 8	miniLINK	-30000	30000	RW
380	VALUE 9	miniLINK	-30000	30000	RW

10-10 Parameter Specification Table

Tag	(MMI) Name	Function Block	Minimum Value	Maximum Value	Notes
381	VALUE 10	miniLINK	-30000	30000	RW
382	VALUE 11	miniLINK	-30000	30000	RW
383	VALUE 12	miniLINK	-30000	30000	RW
384	VALUE 13	miniLINK	-30000	30000	RW
385	VALUE 14	miniLINK	-30000	30000	RW
386	USER FILTER T.C.	RESERVED	0	20000	RW
387	Reserved				
388	SYNC OFFSET	RESERVED	-30000	30000	RW
389	% Encoder RPM	Unallocated	-30000	30000	RO
390	SOURCE TAG	LINK 11	0	499	RW
391	DESTINATION TAG	LINK 11	0	499	RW
392	ADVANCED	LINK 11	0	1	RW
393	MODE	LINK 11	0	6	RW
394	AUXILIARY SOURCE TAG	LINK 11	0	499	RW
395	SOURCE TAG	LINK 12	0	499	RW
396	DESTINATION TAG	LINK 12	0	499	RW
397	ADVANCED	LINK 12	0	1	RW
398	MODE	LINK 12	0	6	RW
399	AUXILIARY SOURCE TAG	LINK 12	0	499	RW
400	OPTION ADDRESS	MAIN PORT P1	0	499	RW
401	DERIVATIVE TC	PID	0	10000	RW
402	INT. TIME CONST.	PID	1	10000	RW
403	FILTER T.C.	PID	0	10000	RW
404	PROP. GAIN	PID	0	1000	RW
405	POSITIVE LIMIT	PID	0	10500	RW
406	NEGATIVE LIMIT	PID	-10500	0	RW
407	O/P SCALER(TRIM)	PID	-30000	30000	RW
408	ENABLE	PID	0	1	RW
409	INT. DEFEAT	PID	0	1	RW
410	INPUT 1	PID	-30000	30000	RW
411	INPUT 2	PID	-30000	30000	RW
412	RATIO 1	PID	-30000	30000	RW
413	RATIO 2	PID	-30000	30000	RW
414	DIVIDER 2	PID	-30000	30000	RW
415	PID ERROR	PID	-10500	10500	RO
416	PID CLAMPED	PID	0	1	RO
417	PID OUTPUT	PID	-31500	31500	RO
418	DIVIDER 1	PID	-30000	30000	RW
419	DIVIDER 1	SETPOINT SUM 1	-30000	30000	RW
420	DIVIDER 0	SETPOINT SUM 1	-30000	30000	RW
421	MAIN CURR. LIMIT	CURRENT LOOP	0	20000	RW
422	RESET VALUE	RAMPS	-30000	30000	RW
423	INPUT 2	SETPOINT SUM 1	-20000	20000	RW
424	LINE SPEED	DIAMETER CALC.	-10500	10500	RW
425	MIN DIAMETER	DIAMETER CALC.	0	10000	RW
426	MIN SPEED	DIAMETER CALC.	0	10000	RW
427	DIAMETER	DIAMETER CALC.	0	10000	RO
428	Modulus Of Line Speed	Unallocated	0	10500	RO

Tag	(MMI) Name	Function Block	Minimum Value	Maximum Value	Notes
429	Modulus Of Reel Speed	Unallocated	0	10500	RO
430	Unfiltered Diameter	Unallocated	0	10000	RO
431	Diameter	Unallocated	0	499	RW
432	TORQUE DEMAND	TORQUE CALC.	-20000	20000	RW
433	TENSION ENABLE	TORQUE CALC.	0	1	RW
434	OVER WIND	TORQUE CALC.	0	1	RW
435	POS. I CLAMP	TORQUE CALC.	0	499	RW
436	NEG. I CLAMP	TORQUE CALC.	0	499	RW
437	REEL SPEED	DIAMETER CALC.	-10500	10500	RW
438	TAPER	TAPER CALC.	-10000	10000	RW
439	TENSION SPT.	TAPER CALC.	0	10000	RW
440	TENSION TRIM	TAPER CALC.	-10000	10000	RW
441	TOT.TENS.DEMAND	TAPER CALC.	-10000	10000	RO
442	Taper	Unallocated	0	499	RW
443	INPUT 1	SETPOINT SUM 2	-30000	30000	RW
444	INPUT 0	SETPOINT SUM 2	-30000	30000	RW
445	INPUT 2	SETPOINT SUM 2	-30000	30000	RW
446	RATIO 1	SETPOINT SUM 2	-30000	30000	RW
447	RATIO 0	SETPOINT SUM 2	-30000	30000	RW
448	DIVIDER 0	SETPOINT SUM 2	-30000	30000	RW
449	LIMIT	SETPOINT SUM 2	0	20000	RW
450	Setpoint Sum 2	Unallocated	0	499	RW
451	SPT. SUM OUTPUT	SETPOINT SUM 2	-20000	20000	RO
452	TAPERED DEMAND	TAPER CALC.	0	10000	RO
453	RAMP RATE	DIAMETER CALC.	1	6000	RW
454	SOURCE TAG	LINK 5	0	499	RW
455	DESTINATION TAG	LINK 5	0	499	RW
456	SOURCE TAG	LINK 6	0	499	RW
457	DESTINATION TAG	LINK 6	0	499	RW
458	SOURCE TAG	LINK 7	0	499	RW
459	DESTINATION TAG	LINK 7	0	499	RW
460	SOURCE TAG	LINK 8	0	499	RW
461	DESTINATION TAG	LINK 8	0	499	RW
462	RESET VALUE	DIAMETER CALC.	0	10000	RW
463	EXTERNAL RESET	DIAMETER CALC.	0	1	RW
464	OFFSET	ANOUT 1 (A7)	-10000	10000	RW
465	OFFSET	ANOUT 2 (A8)	-10000	10000	RW
466	DIVIDER 1	SETPOINT SUM 2	-30000	30000	RW
467	SOURCE TAG	LINK 9	0	499	RW
468	DESTINATION TAG	LINK 9	0	499	RW
469	SOURCE TAG	LINK 10	0	499	RW
470	DESTINATION TAG	LINK 10	0	499	RW
471	STANDBY FIELD	RESERVED	0	10000	RW
472	Speed Feedback State (Warning)	Unallocated	0	1	RO
473	MODE	PID	0	4	RW
474	MIN PROFILE GAIN	PID	0	10000	RW
475	PROFILED GAIN	PID	0	1000	RO
476	3-PHASE FIELD	RESERVED	0	1	RW

10-12 Parameter Specification Table

Tag	(MMI) Name	Function Block	Minimum Value	Maximum Value	Notes
477	Autotune Flag Diagnostic	Unallocated	0	1	RO
478	DESTINATION TAG	TENSION+COMP CALC	0	499	RW
479	FIXED INERTIA COMP	TENSION+COMP CALC	-30000	30000	RW
480	VAR INERTIA COMP	TENSION+COMP CALC	-30000	30000	RW
481	ROLL MASS / WIDTH	TENSION+COMP CALC	0	10000	RW
482	FILTER TC	TENSION+COMP CALC	0	20000	RW
483	RATE CAL	TENSION+COMP CALC	-10000	10000	RW
484	NORMALISED dv/dt	TENSION+COMP CALC	-30000	30000	RW
485	INERTIA COMP O/P	TENSION+COMP CALC	20000	20000	RO
486	TENSION SCALER	TENSION+COMP CALC	-30000	30000	RW
487	STATIC COMP	TENSION+COMP CALC	-30000	30000	RW
488	DYNAMIC COMP	TENSION+COMP CALC	-30000	30000	RW
489	REWIND	TENSION+COMP CALC	0	1	RW
490	Remote UDP Upload Select	Unallocated	0	FF	RW
491	Setpoint Sum 2 Output 0	Unallocated	-20000	20000	RO
492	Setpoint Sum 2 Output 1	Unallocated	-20000	20000	RO
493	ANIN 2 (A3) SCALED O/P	Unallocated	-10000	10000	RO
494	DESTINATION TAG	DIGITAL INPUT C4	0	499	RW
495	DESTINATION TAG	DIGITAL INPUT C5	0	499	RW
496	JOG/SLACK	AUX I/O	0	1	RW
497	ENABLE	AUX I/O	0	1	RW
498	LINE SPEED SPT	TENSION+COMP CALC	-10500	10500	RW
499	Option Address	Unallocated	0	32767	RW

TECHNICAL SPECIFICATIONS

Caution

Always use an external ac line choke. Refer to "External AC Supply (RFI) Filters and Line Choke".

Environmental Details

Operating Temperature	0°C to +55°C (see the "Cooling" table) Operating temperature is defined as the ambient temperature to the immediate surround of the Converter, when the Converter and other equipment adjacent to it is operating at worst case conditions.	
Storage Temperature	-25°C to +55°C	
Shipping Temperature	-25°C to +70 °C	
Product Enclosure Rating	Cubicle Mounted	IP00 (Europe) UL Open Type (North America/Canada)
Altitude	If >500 metres above sea level, derate Motor Power rating by 1% per 200 metres to a maximum of 5,000 metres	
Humidity	Maximum 85% relative humidity at 40°C non-condensing	
Atmosphere	Non flammable, non corrosive and dust free	
Vibration	Unit to be physically isolated from all vibration.	
Climatic Conditions	Class 3k3, as defined by EN60721-3-3 (1995)	
Safety		
Overvoltage Category	Overvoltage Category III	
Pollution Degree	Pollution Degree 2	
Europe	EN50178 (1998), when fitted inside a cubicle	
North America/Canada	UL508C	

EMC Compliance

All models	European Community Directive 89/336/EEC
All models	EN50082-1 (1992) and prEN50082-2 (1992) for immunity EN50081-1(1992) Class B radiated emissions when mounted inside a cubicle
If fitted with external filters	EN50081-2 (1994) Class A conducted emissions

External AC Supply (RFI) Filters and Line Choke

Filters must only be fitted on the mains side of the contactor.
Always use the recommended external AC Line Choke.

AC supply filter and line choke part numbers for conformance with EN55011 Class A.

Armature Current Rating (A)	Total Filter Watt Loss (W)	Parker SSD Filter Part No.	SSD EMC Line Choke
35	25	1 off CO388965U035	CO463036
70	75	1 off CO388965U110	CO463037
110	75	1 off CO388965U110	CO463038
150, 180	158	1 off CO388965U180	CO463039
270	50	1 off CO467843U340	CO057960
360	50	1 off CO467843U340	CO057961
450	100	2 off CO467843U340	CO057962
720	100	2 off CO467843U340	CO057963
800	100	3 off CO467843U340	CO057963

AC supply filter part numbers for “non CE marked” converters.

Armature Current Rating (A)	Total Filter Watt Loss (W)	Parker SSD Filter Part No.	Line Choke Requirement
950, 1100	150	3 off CO467843U340	2% minimum, refer to Parker SSD Drives
1388	200	4 off CO467843U340	
1600, 1800	250	5 off CO467843U340	
2300	350	7 off CO467843U340	
2800	400	8 off CO467843U340	

Cabling Requirements for EMC Compliance

	Model	Power Supply Cable	Motor Cable	External Filter to Converter Cable	Signal/Control Cable
Cable Type (for EMC Compliance)		Unscreened	Screened/ armoured	Replace flying leads with screened/armoured when >0.6m	Screened
Segregation		From all other wiring (clean)	From all other wiring (noisy)		From all other wiring (sensitive)
Length Limitations With External Filter		Unlimited	50 metres	As short as possible	25 metres
Screen to Earth Connection			Both ends	Both ends	Converter end only

Internal Fuses

PCB Fuses			
Board	Identification	Fuse Rating	Parker SSD Drives Part Number
AH385851	FS1, 5x20mm glass slow-blow (for auxiliary supply, contactor, fan supply)	3A	CH540033
AH385621	FS1, 5x20mm glass slow-blow (for auxiliary supply, contactor, fan supply)	3A	CH540033
AH385128	FS1, 5x20mm glass (fan supply)	1A	CH460013
	FS2, 5x20mm glass (contactor)	3A	CH460033
	FS3, 5x20mm glass slow-blow (auxiliary supply)	400mA	CH540042

Field Fuses		
Identification	Fuse Rating	Parker SSD Drives Part Number
10x38mm (all units up to 270A output current)	10A	CH430014
10x38mm (all units above 270A output current)	20A	CH430024

External Fuses (European)

For fuses where compliance to UL Standards are required, refer to Chapter 12: "Installing the Converter" - Requirements for UL Compliance.

Product Code	BS88 Type Fuse		DIN Type Fuse		Thyristor A^2t
Block 2	Fuse Rating	Parker SSD Drives Part Number	Fuse Rating	Part Number	@ 125°C Junction Temperature
0010 to 0350	35A	CH110353	40A	CH570044	800 A^2t
0351 to 0700	75A	CH120753	80A	CH570084	8,000 A^2t
0701 to 1100	110A	CH120114	160A	CH580164	8,000 A^2t
1101 to 1800	150A	CH120154	200A	CH580025	15,000 A^2t
1801 to 2700	300A	CH130035	550A	CH590554	125,000 A^2t
2701 to 4500	---	---	700A	CH590075	320,000 A^2t
4501 to 7200	---	---	800A	CH590085	500,000 A^2t

Earthing/Safety Details

Earthing	Permanent earthing is mandatory on all units because the earth leakage current exceeds 3.5mA ac/10mA dc under normal operating conditions. Permanent earthing can be laid in two ways:: 1. By using a copper conductor of at least 10mm² cross-sectional area. 2. By using a second conductor, through separate terminals electrically parallel to the protective conductor. ***Note:*** *Each conductor itself must meet the local requirements for a protective earth conductor.*
Input Supply Details (TN) and (IT)	Units with or without external filters are suitable for use on earth referenced (TN) supplies, but units used with a filter are not recommended for non-earth referenced (IT) supplies..
Earth Leakage Current	>50mA (all models)

Electrical Ratings - Power Circuit

Refer to Chapter 3: "Earth Fault Monitoring Systems" for circuit breaker details.

Configuration: 590, *598 - Two anti-parallel 3-phase thyristor bridges
591, *599 - One 3-phase fully controlled thyristor bridge
** External stack options*

Short circuit protection semiconductor fuses should be installed in the 3-phase supply to the 590 products. These fuses are suitable for branch circuit short-circuit protection of the solid-state motor controllers only.

Model	Voltage Ranges (V) ±10% 45/65Hz	Output Current (armature) (A)	Approximate Power Loss (W)	Motor Power @ 460V dc assuming 95% motor efficiency (kW)	Max Supply Fault Rating (A) rms Symmetrical
590	110-500	35	105	15	5000
590	110-500	70	210	30	5000
590	110-500	110	330	45	10000
590	110-500	150	450	60	10000
590	110-500	180	540	75	10000
590	110-500	270	710	110	10000
590	110-500	360	1080	150	18000
590	110-500	450	1350	190	18000
590	110-500	720	2160	300	30000
591	110-500	35	105	15	5000
591	110-500	70	210	30	5000
591	110-500	110	330	45	10000
591	110-500	150	450	60	10000
591	110-500	180	540	75	10000
591	110-500	270	710	110	10000
591	110-500	360	1080	150	18000
591	110-500	450	1350	190	18000
591	110-500	720	2160	300	30000
598	220-660	950	2850	395	
598	220-660	1100	3300	455	
598	220-660	1388	4164	575	
598	220-660	1600	4800	660	
598	220-660	1800	5400	745	
598	220-660	2300	6900	950	
598	220-660	2800	8400	1150	
599	220-660	950	2850	395	
599	220-660	1100	3300	455	
599	220-660	1388	4164	575	
599	220-660	1600	4800	660	
599	220-660	1800	5400	745	
599	220-660	2300	6900	950	
599	220-660	2800	8400	1150	

3-Phase Power Supply Details

Mains Supply	3-phase, 50/60Hz, earth referenced (TN) and non-earth referenced (IT).
Operating Supply Tolerance	±10%
Voltage Ranges	220 to 500V ac - Standard Product 110 to 220V ac - Special Option 220 to 660V ac - External Stack Module (598/599)
Supply Current	(0.9 x Idc) Amps ac rms
Field Supply	500V maximum
Phase	3-phase rotation insensitive, no adjustment necessary for frequency change

Electrical Ratings - Output

[1] Please refer to Parker SSD Drives for the selection of suitable stack assemblies.

[2] The standard overload capacity available is 200% for 10 seconds, 150% for 30 seconds. The 720A chassis has no overload capacity at maximum current whereas at output currents less than 650A overload capacity is as normal.

Model	Max Supply Voltage (V)	Output Current (armature) (A)	Approximate Power Loss (W)	Overload Capacity Available (armature current)	Field Current Rating (A)	Max Supply Fault Rating (A) rms Symmetrical
590/1	500	35	105	YES	10	5000
590/1	500	70	210	YES	10	5000
590/1	500	110	330	YES	10	10000
590/1	500	150	450	YES	10	10000
590/1	500	180	540	YES	10	10000
590/1	500	270	710	YES	10	10000
590/1	500	360	1080	YES	20	18000
590/1	500	450	1350	YES	20	18000
590/1	500	720	2160	NO [2]	20	30000
598/9	660	950	2850	YES	30	
598/9	660	1100	3300	YES	30	
598/9	660	1388	4164	YES	30	
598/9	660	1600	4800	YES	30	
598/9	660	1800	5400	YES	30	
598/9	550 [1]	2300	6900	YES	30	
598/9	550 [1]	2800	8400	YES	30	

Auxiliary Power Supply Details

* AC fans are used , thus the input voltage must be suitable for the fans supplied, either 110-120V ±10% or 220-240V ±10%.

Control and Fan*	Single phase, 50-60Hz, ±10%
Supply Voltage	110 - 120V ±10% 220 - 240V ±10%
Reference Supplies (for speed and current setpoints)	+10V ±0.01 @ 10mA maximum -10V ±0.01 @ 10mA maximum
DC Supply:	
Power Board AH385851	+24V nominal internally regulated Maximum output capability: 17W or 750mA
Power Board AH385621	+24V nominal internally regulated Maximum output capability: 17W or 750mA
Power Board AH385128	+24V nominal internally regulated Maximum output capability: 6W or 250mA

Terminal Definitions (Digital/Analog Inputs & Outputs)		
Digital Input	Nominal Input Voltage	24V dc
	Maximum Input Voltage	30V dc
	Input Impedance	4.7kΩ
	Sample Time	10ms
	Threshold	16V typical
	V Input Low	<6V
	V Input High	>18V
Digital Output These outputs are active high and source current from the terminal to the load. Thus the load must be connected between the output and the signal ground. A free-wheel diode is included in the output to protect the output transistor when switching inductive loads such as relays.	Digital Output Voltage	+24V dc
	Digital Output Current	+50mA maximum source
	Output Update Rate	10ms
	Output Impedance	Negligible up to 50mA load, short circuit protection provided.
Analog Input/Output Terminal blocks A, B, and C are located on the control board each block being a 9 way plug-in connector. In addition to terminal blocks A, B and C, terminal blocks G and H provide connections when the two option modules are fitted on the control board.	Input/Output Resolution	10 Bit plus sign, i.e. 10mV. 0.1% of full scale deflection
	Input Impedance	100kΩ with a 1ms filter for Analog I/P (A3) and 2ms for others
	Maximum Input Sample Rate	10ms (typically), 3ms for Analog I/P 2 (A3)
	Input Overload Capability	10%, i.e. maximum recognisable voltage 11V. Analog Tachogenerator input should be applied to Terminal G3 on Calibration Option Card only
	Output Capacity	10V at 5mA. Short circuit protected
	Output Update Rate	10ms
	Output Overdrive Capability	10%, i.e. maximum output 11V

Printed Circuit Board Types

Power Board Part No.	Product Used On	Power Range	Input Voltage (3 phase)	Input Frequency	Aux Supply (single phase)
AH385851U002	590, 4 quad, high voltage option	35A to 270A	220 to 500V	50/60Hz	110V/240V ac
AH385851U005	590, 4 quad, low voltage option	35A to 270A	110 to 220V	50/60Hz	110V/240V ac
AH385851U003	591, 2 quad, high voltage option	35A to 270A	220 to 500V	50/60Hz	110V/240V ac
AH385851U004	591, 2 quad, low voltage option	35A to 270A	110 to 220V	50/60Hz	110V/240V ac
AH385621U001	590, 4 quad	271A to 720A	not applicable	50/60Hz	110V/240V ac
AH385621U001	591, 2 quad	271A to 720A	not applicable	50/60Hz	110V/240V ac
AH385128U009	598, external stack	721A upwards	not applicable	50/60Hz	110V/240V ac
AH385128U009	599, external stack	721A upwards	not applicable	50/60Hz	110V/240V ac
Power Boards AH385621U001 and AH385128U009 operate with Trigger Board AH055036U003 and Suppression Board AI386001					
Auxiliary Amps					
AH385851	Internal PSU/Fans/Contactor : 4A fused at FS2				
AH385621	Internal PSU/Fans/Contactor : 4A fused at FS2				

Power Terminals

Terminal Description	Terminal Function	Signal Level	Terminal Number
Mains Supply L1	Three phase mains power input, phase reference Line 1	500Vac maximum 50-60Hz line-to-line	L1
Mains Supply L2	Three phase mains power input, phase reference Line 2	500Vac maximum 50-60Hz line-to-line	L2
Mains Supply L3	Three phase mains power input, phase reference Line 3	500Vac maximum 50-60Hz line-to-line	L3
Armature connection positive	Converter dc power output, reference Armature Positive connection to dc motor	600Vdc maximum with respect to A- (maximum voltage dependent upon the supply voltage, the ratio being: Vout is approximately equal to 1.2Vac supply)	A+
Armature connection negative	Converter dc power output, reference Armature Negative connection to dc motor	600Vdc maximum with respect to A+ (maximum voltage dependent upon the supply voltage, the ratio being: Vout is approximately equal to 1.2Vac supply)	A-

Terminal Information (Power Board)			
Terminal Description	Terminal Function	Signal Level	Terminal Number
External field supply FL1	External single phase ac Line 1 input to field bridge.	500V ac maximum, 50-60Hz line-to-line	D1
External field supply FL2	External single phase ac Line 2 input to field bridge. Required AC Input Voltage = 1.11 x Nominal DC Output. The field regulator will control the field current provided that the Nominal DC Output voltage exceeds the field voltage by at least 10%. i.e. $V_{AC} = 1.11 \times V_{DC}$ and $V_{DC} = 1.1 \times V_{FIELD}$ therefore $V_{AC} = 1.22 \times V_{FIELD}$ The external AC supply must be fitted with high speed fuses to protect the field regulator. For controllers with 10A field capability 10A fuses should be used, those with 20A field capability 20A fuses. *Note: When using an external ac input it is important to have the correct phase relationship on the terminals. The supply must be derived from L1 (Red) and L2 (Yellow) phases directly or indirectly through a transformer. L1 must be connected to D1, and L2 to D2.*	500V ac maximum, 50-60Hz line-to-line	D2
Field Output F+	DC supply for motor field connections.	0.9 x Vac	D4
Field Output F-	DC supply for motor field connections. The DC output voltage at these terminals will depend upon the AC supply voltage and the mode of field control. *Voltage Control* The output voltage will be determined by the ratio parameter in the field variables. The relationship between the dc output voltage and AC input voltage is determined by the equation:- $Vdc = \frac{Vratio \times VAC}{100}$ The default value of Vratio is 90% hence the DC output voltage will be the same as for a full wave diode rectifier i.e., 90% is maximum output.	0.9 x Vac	D3

Terminal Information (Power Board)

Terminal Description	Terminal Function	Signal Level	Terminal Number
Main contactor coil	Line This terminal is the switched output from the contactor control relay and is derived from the auxiliary supply at terminal D8. The output is internally fused at 3A hence contactor coils having a high pick-up current must be operated via a slave relay. *Note: The contacts of the Contactor Control Relay are suppressed by a series connected resistor (680 Ohms) and capacitor (22nF) to protect the relay contacts. Users should be aware that when the contactor Control Relay is "De-energised", a leakage current of approximately 2mA can be expected and this should be considered when interfacing to these terminals. Typically, there could be the energisation of very sensitive relays.*	110/240V 50-60Hz line-to-line	D5
Main contactor coil	Neutral This terminal is internally connected to the auxiliary supply neutral and provides a convenient connection point for the contactor coil neutral connection.	110/240V 50-60Hz line-to-line	D6
Auxiliary supply Auxiliary supply	Neutral Line These terminals are the mains input connections for the switch mode power supply, contactor control relay supply and cooling fan supply (when force cooled - refer to Chapter 13: "Standard and Optional Equipment"). The voltage applied to these terminals is Product Code dependent	110/240V 50-60Hz line-to-line 110/240V 50-60Hz line-to-line	D7 D8

Terminal Information (Control Board)				
Terminal Description	Terminal Function	Signal Level	Configurable	Terminal Number
TERMINAL BLOCK A				
0V (Signal)	Zero Volt Reference	0V	N/A	A1
Analog Input 1	Speed Setpoint No. 1	+10V = Full speed setpoint forward -10V = Full speed setpoint reverse	NO	A2
Analog Input 2	Aux. Speed Setpoint/Current Demand The function of this input is determined by Digital Input No. 3 at terminal C8. C8 open circuit = Speed Setpoint C8 at +24V = Current Demand	+10V= Full speed setpoint forward -10V = Full speed setpoint reverse in speed setpoint mode. +10V = 100% Positive current demand. -10V = 100% Reverse current demand.	YES	A3
Analog Input 3	Ramped Speed Setpoint	+10V= Full speed setpoint -10V = Full speed setpoint reverse	YES	A4
Analog Input 4	Aux. Current Clamp -ve	+10V= 200% Positive current demand -10V = 200% Reverse current clamp	YES	A5
Analog Input 5	Main Current Limit/Aux. Current Clamp +ve The function of analog inputs 4 and 5 is determined by digital Input No.1 on terminal C6. C6 open circuit. Analog inputs No.5 = Main Current Limit. C6 at +24V. Analog input No. 5 = Auxiliary Current Clamp Positive. Analog Input No. 4 = Auxiliary Current Clamp Negative.		YES	A6
Analog Output 1	Speed Feedback	+10V= Full speed feedback forward. -10V = Full speed feedback reverse.	YES	A7
Analog Output 2	Total Speed Setpoint	+10V= Full speed feedback forward. -10V = Full speed feedback reverse.	YES	A8
Current Meter Output	Buffered Armature Current Output The output can be selected as either Bipolar or Unipolar by the Armature I parameter.	Bipolar Mode +10V= 200% output current forward. -10V = 200% output current reverse. Unipolar Mode +10V= 200% output current.	NO	A9

Terminal Information (Control Board)

Terminal Description	Terminal Function	Signal Level	Configurable	Terminal Number
		TERMINAL BLOCK B		
0V (Signal)	Zero Volt Reference	0V	N/A	B1
Not Connected	Not Connected			B2
+10V DC Reference	User +10V Reference	+10V at 10mA short circuit protected	N/A	B3
-10V DC Reference	User -10V Reference	-10V at 10mA short circuit protected	YES	B4
Digital Output 1	Zero Speed Detected The operating level of this output can be modified by the standstill zero threshold parameter to give the desired accuracy of operation	+24V at zero speed	YES	B5
Digital Output 2	Drive Healthy (Drive Operational) This output is true when the controller is Healthy.	+24V when Healthy	YES	B6
Digital Output 3	Drive Ready This output is true when the controller is ready to function, i.e., "locked" into the mains.	+24V when Ready	YES	B7
Program Stop Input	Program Stop When the Program Stop input is held at +24V, the drive operates as required by the inputs. When the Program Stop is open circuit or at zero volts, the controller provides a controlled or program stop as defined by the Program Stop parameters.#	+24V drive run 0V (o/c) drive program stop Threshold +16V	NO	B8
Coast Stop Input	Coast Stop When the Coast Stop input is at +24V, the controller operates normally. When the Coast Stop is at zero volts or open circuit, the main contactor is open and the drive no longer operates. The motor coasts to rest.	+24V drive run 0V (o/c) drive coasts to rest. Threshold +16V	NO	B9

Terminal Information (Control Board)				
Terminal Description	Terminal Function	Signal Level	Configurable	Terminal Number
TERMINAL BLOCK C				
0V (Signal)	Zero Volt Reference	0V	N/A	C1
Thermistor/ Microtherm Input	Motor overtemperature protection element input	It is good practice to protect DC motors against sustained thermal overloads by fitting temperature sensitive resistors or switches in the field and interpole windings of the machine. These devices have a low resistance (typically 200Ω) up to a reference temperature 125°C). Above this temperature, their resistance rises rapidly to greater than 2000Ω. Motor overtemperature sensors should be connected in series between terminals C1 and C2. A motor overtemperature alarm will be indicated if the external resistance between C1 and C2 exceeds 1.8k Ω ± 200Ω. Terminals C1 and C2 must be linked if overtemperature sensors are not used.	N/A	C2
Start/Run Input	Start/Run When an input is applied to this terminal, the main contactor will close and the controller will operate provided there are no alarms, program stop/coast stop signals are high and the controller is enabled. When the input is removed the controller will perform a regenerative stop to zero speed. A regenerative stop can only be achieved by a 4 quad regenerative controller; the 2 quad non-regenerative controller will coast to zero speed.	+24V = True/Run 0V (o/c) = False/Normal Stop Threshold + 16V	NO	C3
Jog Input	Jog When the Jog Input is held at +24V, the drive jogs provided input C3 is low. When the Jog Input is removed the drive will ramp down to zero obeying the Jog Ramp Rate.	+24V = True/Jog 0V = False/Stop Threshold +16V	YES (reserved parameter)	C4
Enable Input	Enable The Enable Input provides a means of electronically inhibiting controller operation. If the enable input is not true all control loops will be inhibited and the controller will not function.	+24V = True/Enable 0V = False/Inhibit Threshold +16V	YES (reserved parameter)	C5

Terminal Information (Control Board)

Terminal Description	Terminal Function	Signal Level	Configurable	Terminal Number
Digital Input 1	Current Clamp Select This input alters the configuration of the current clamps. With no connection, i.e., false, Analog I/P 5 provides a unipolar current limit. When true, Analog I/P5 is the positive current clamp, Analog I/P 4 is the negative current clamp	+24V = True/Bipolar Clamp 0V = False/Unipolar Clamp Threshold +16V	YES	C6
Digital Input 2	Ramp Hold If the input is held true the S-Ramp output is frozen at the last value irrespective of the Ramped Setpoint Input. When false the S-Ramp Output follows the Ramped Setpoint Input with a delay determined by the Acceleration and Deceleration Ramped time parameters.	+24V = True/Hold 0V = False/Ramp Threshold + 16V	YES	C7
Digital Input 3	Current Demand Isolate This input alters the drive operation from Speed Control to Current Control. When digital input No. 3 is true, analog input No. 2 provides the current demand and the speed loop is disconnected. When false the speed loop is in control and analog input No. 2 is an auxiliary speed setpoint.	+24V = True/Current 0V = False/Speed Threshold + 16V	YES	C8
+24V Supply	+24V	Maximum output current: 250mA or 750mA (power board dependent - refer to “Auxiliary Power Supply Details”).	N/A	C9

Terminal Information (Option Boards)

Terminal Description	Terminal Function	Signal Level	Terminal Number
TERMINAL BLOCK G (SWITCHABLE TACHO CALIBRATION OPTION)			
+ AC Tacho input	+AC		G1
- AC Tacho input	- AC		G2
+ DC Tacho input	+DC		G3
- DC Tacho input	- DC		G4
Tacho Out	Calibrated Tacho Output		P3
(5701 MICROTACH RECEIVE OPTION - PLASTIC)			
Signal Input	Microtach fibre optic input	There are no other connections to this option module. (The 5701 Microtach should be powered by an external 24V DC at 60mA, 1.4W.)	F1
(5901 MICROTACH OPTION MODULE - GLASS)			
Signal Input	Microtach fibre optic input	There are no other connections to this option module. (The 5901 Microtach should be powered by an external 24V DC at 125mA, 3W.)	F1
TERMINAL BLOCK G (ENCODER OPTION)			
Terminal Block G pinouts will change function depending upon which option board is fitted to the control board. The configuration supplied as standard is with the Switchable Tacho Calibration Option fitted. Further information on the other options may be obtained from the relevant Technical Manual.			
TERMINAL BLOCK H (SERIAL COMMUNICATIONS) *Note: Where more than 8 serial communications option boards are interconnected on one system, the line termination resistor fitted to the option board causes excessive loading on the system. The resistor should be removed on boards daisy chained in the serial wiring, not those at the beginning or end of the system. Refer to Parker SSD Drives if in doubt.*			
RS485			
XMT- XMT +	Serial Communications Port P1 Transmit Terminals Balanced Line Driver outputs compatible with RS422 signal levels		H1 H2
0V Isolated 0V Isolated	Serial Communications Port Signal ground with galvanic isolation from controller signal ground or power ground (note that the signal screen must also be grounded at the host)		H3 H4
RCV- RCV+	Serial Communications Port P1 Receive Terminals Balance Line Receiver input compatible with RS422 signal levels		H5 H6
PROFIBUS			
0Vext +5VDCext	Signal reference for Profibus +5VDCext/50mA supply for Profibus		H1 H2
B-B` A-A`	Receive/Transmit-Data-P Receive/Transmit-Data-N		H3 H4
RTS 0Vext	For connecting repeater As pin 1		H5 H6

Termination Tightening Torque

Product	Terminations	Maximum Tightening Torque		
ALL	A1 - A9	M2.5	5-7lb.in.	0.56-0.79Nm
	B1 - B9	M2.5	5-7lb.in.	0.56-0.79Nm
	C1 - C9	M2.5	5-7lb.in.	0.56-0.79Nm
35 - 720 Amps	D1 - D8	M3	4lb.in.	0.45Nm
35 - 180 Amps	A+, A-, L1, L2, L3	M8	8.1lb.ft.	11.0Nm
	Ground	M6	5.0lb.ft.	6.8Nm
270 Amps	A+, A-, L1, L2, L3	M8	12.2lb.ft.	16.5Nm
	Ground	M6	5.0lb.ft.	6.8Nm
360 - 450 Amps	A+, A-,	M10	24.2lb.ft.	32.8Nm
	L1, L2, L3	M12	42.2lb.ft.	57.2Nm
	Ground	M10	24.2lb.ft.	32.8Nm
720 Amps	A+, A-,	M10	24.2lb.ft.	32.8Nm
	L1, L2, L3	M14	67.1lb.ft.	91.0Nm
	Ground	M8	12.2lb.ft	16.5Nm

Mechanical Details

Mounting Orientation	Vertical. Refer to Chapter 3: "Mechanical installation" for dimensions and air clearances.					
590/591						
	Up to 70A	Up to 150A	Up to 180A	270A	450A	720A
Nominal Blower Throughput (m^3/hour)	-	100	300	350	490	1000 (at 80 millibar for rated output)
Weight (kg (lbs))	10-14 (22-30)	15 (33.2)	17 (37.5)	20 (44)	30 (66)	65 (143)
Power Terminations	Bus bars with M8 screws and captive nuts			AC terminals:: bus bars with M8 screws and captive nuts DC terminals:: M8 bolts with nuts and washers	AC bus bars with M12 screws and captive nuts	AC bus bars with M14 screws and captive nuts
Control Terminations	Plug-on connectors with retaining catches					
598/599 module exceeding 720A						
Weight (kg (lbs))	10-14 (22-30)					
Power Terminations	Bus bars with M8 screws and captive nuts					
Control Terminations	*Control Board*: Plug on connectors with retaining catches *Current Feedback/Coding Low Volts:* Screw in with wire protectors *Coding High Volts/Armature Feedback*: M5 studs with nuts and washers					

Cooling

[1]Derate linearly at 1% per degree centigrade for temperature exceeding the maximum rating ambient (55°C).

If the enclosure is totally enclosed, the exposed metal surface dissipates approximately 50W/m² for a 10°C temperature rise of internal air above ambient.

Model	Output Current (armature) (A)	Maximum Rating Ambient [1] (°C)	Cooling Method	Number of Fans	Fan Current Rating 110/120V ac	Fan Current Rating 220/240V ac
590/1	35	45	Natural	-	-	-
590/1	70	45	Natural	-	-	-
590/1	110	35	Integral Fan	2	100mA	-
590/1	150	35	Integral Fan	2	100mA	-
590/1	180	35	Integral Fan	1	0.36A	0.21A
590/1	270	35	Integral Fan	1	0.36A	0.21A
590/1	360	35	Integral Fan	1	1.2A	0.55A
590/1	450	35	Separate Fan	1	1.2A	0.62A
590/1	720 *	35	Separate Fan	1	1.2A	0.62A
* 720A (800A) also has two integral fans rated 110/120V ac, 230mA						
598/9	950	35	Separate Fan	2	0.85A	0.41A
598/9	1100	35	Separate Fan	2	0.85A	0.41A
598/9	1388	35	Separate Fan	2	0.85A	0.41A
598/9	1600	35	Separate Fan	2	0.85A	0.41A
598/9	1800	35	Separate Fan	2	1.67A	0.87A
598/9	2300	35	Separate Fan	2	1.67A	0.87A
598/9	2800	35	Separate Fan	2	1.67A	0.87A
The separate fans supplied with the external stack assemblies (598/9) are provided by the external stack supplier, hence the currents quoted are for guidance only. Check the actual current by referring to the fan supplied.						

CERTIFICATION FOR THE CONVERTER

Caution

The integration of this product into other apparatus or systems is not the responsibility of Parker SSD Drives Ltd, with respect to applicability, effectivity, or safety of operation of the other apparatus or systems.

Requirements for EMC Compliance

All Variable Speed Drives (VSDs) potentially produce electrical emissions which are radiated into the environment and conducted back into the ac supply. VSDs are inherently immune to any additional external electrical noise. The following information is provided to maximise the Electro Magnetic Compatibility (EMC) of VSDs and systems in their intended operating environment, by minimising their emissions and maximising their immunity.

Minimising Radiated Emissions

EN55011/EN55022 radiated emission measurements are made between 30MHz and 1GHz in the far field at a distance of 10 to 30 metres. Limits lower than 30MHz or in close proximity are not specified. Emissions from individual components tend to be additive.

- Use a screened/armoured cable between VSD/cubicle and motor containing the motor protective earth (PE) connection. It should have a 360° screen termination. Earth screen at both ends connecting to the motor frame and cubicle. Maintain the screen integrity using 360° terminations.

Note: *Some hazardous area installations may preclude direct earthing at both ends of the screen, in this case earth one end via a 1µF 50Vac capacitor, and the other as normal.*

- Keep unshielded cable as short as possible inside the cubicle.
- Always maintain the integrity of the shield.
- If the cable is interrupted to insert contactors etc., re-connect the screen using the shortest possible route.
- Keep the length of screen stripped-back as short as possible when making screen connections.
- Ideally use 360° screen terminations using cable glands or `U' clips on power screen rails.

If a shielded cable is not available, lay unshielded motor cables in a metal conduit which will act as a shield. The conduit must be continuous with a direct electrical contact to the VSD and motor housing. If links are necessary, use braid with a minimum cross sectional area of $10mm^2$.

Note: *Some motor gland boxes and conduit glands are made of plastic, if this is the case, then braid must be connected between the screen and the chassis. In addition at the motor end, ensure that the screen is electrically connected to the motor frame since some terminal boxes are insulated from the frame by gasket/paint.*

Earthing Requirements

IMPORTANT: Protective earthing always takes precedence over EMC earthing.

Protective Earth (PE) Connections

Note: *In accordance with installations to EN60204, only one protective earth conductor is permitted at each protective earth terminal contacting point.*

Local wiring regulations may require the protective earth connection of the motor to be connected locally, i.e. not as specified in these instructions. This will not cause shielding problems because of the relatively high RF impedance of the local earth connection.

EMC Earth Connections

For compliance with EMC requirements, we recommend that the "0V/signal ground" is separately earthed. When a number of units are used in a system, these terminals should be connected together at a single, local earthing point.

Control and signal cables for the encoder, all analogue inputs, and communications require screening with the screen connected only at the VSD end. However, if high frequency noise is still a problem, earth screen at the non VSD end via a 0.1µF capacitor.

Note: *Connect the screen (at the VSD end) to the VSD protective point, and not to the control board terminals.*

Cabling Requirements

Note: *Refer to Chapter 11: "Technical Specifications" for additional Cabling Requirements.*

Planning Cable Runs

- Use the shortest possible motor cable lengths.
- Use a single length of cable to a star junction point to feed multiple motors.
- Keep electrically noisy and sensitive cables apart.
- Keep electrically noisy and sensitive parallel cable runs to a minimum. Separate parallel cable runs by at least 0.25 metres. For runs longer than 10 metres, separation should be increased proportionally. For example if the parallel runs were 50m, then the separation would be (50/10) x 0.25m = 1.25m.
- Sensitive cables should cross noisy cables at 90°.
- Never run sensitive cables close or parallel to the motor, dc link and braking chopper circuit for any distance.
- Never run supply, dc link or motor cables in the same bundle as the signal/control and feedback cables, even if they are screened.
- Ensure EMC filter input and output cables are separately routed and do not couple across the filter.

Increasing Motor Cable Length

Because cable capacitance and hence conducted emissions increase with motor cable length, conformance to EMC limits is only guaranteed with the specified ac supply filter option using a maximum cable length as specified in Chapter 11: "Technical Specifications".

This maximum cable length can be improved using the specified external input or output filters. Refer to Chapter 11: "Technical Specifications" - External Filters.

Screened/armoured cable has significant capacitance between the conductors and screen which increases linearly with cable length (typically 200pF/m but varies with cable type and current rating).

Long cable lengths may have the following undesirable effects:

- Producing increased conducted emissions which degrade the performance of the EMC filter due to saturation.
- Causing RCDs (Residual Current Devices) to trip due to increased high frequency earth current.
- Producing increased heating inside the EMC ac supply filter from the increased conducted emissions.

These effects can be overcome by adding chokes or output filters at the output of the VSD.

EMC Installation Options

The unit, when installed for Class B operation, will be compliant with EN55011 (1991)/ EN55022 (1994) for radiated emissions, as described below.

Screening & Earthing (cubicle mounted, Class B)

Note: *The installation requirements of local safety standards must be achieved regarding the safety of electrical equipment for machines.*

The unit is installed for Class B operation when mounted inside a cubicle having 10dB attenuation between 30 and 100MHz (typically the attenuation provided by a metal cabinet with no aperture of dimension greater than 0.15m), using the recommended ac supply filter and having met all cabling requirements.

Note: *Radiated magnetic and electric fields inside the cubicle will be high and any components fitted inside must be sufficiently immune.*

The VSD, external filter and associated equipment are mounted on to a conducting, metal mounting panel. Do not use cubicle constructions that use insulating mounting panels or undefined mounting structures. Cables between the VSD and motor must be screened or armoured and terminated at the VSD or locally on the back panel.

Single VSD - Single Motor

Apply a single point series earthing strategy for a single VSD mounted in a cubicle as shown.

The protective earth connection (PE) to the motor must be run inside the screened cable between the motor and VSD and be connected to a separate star point earth terminal near the VSD.

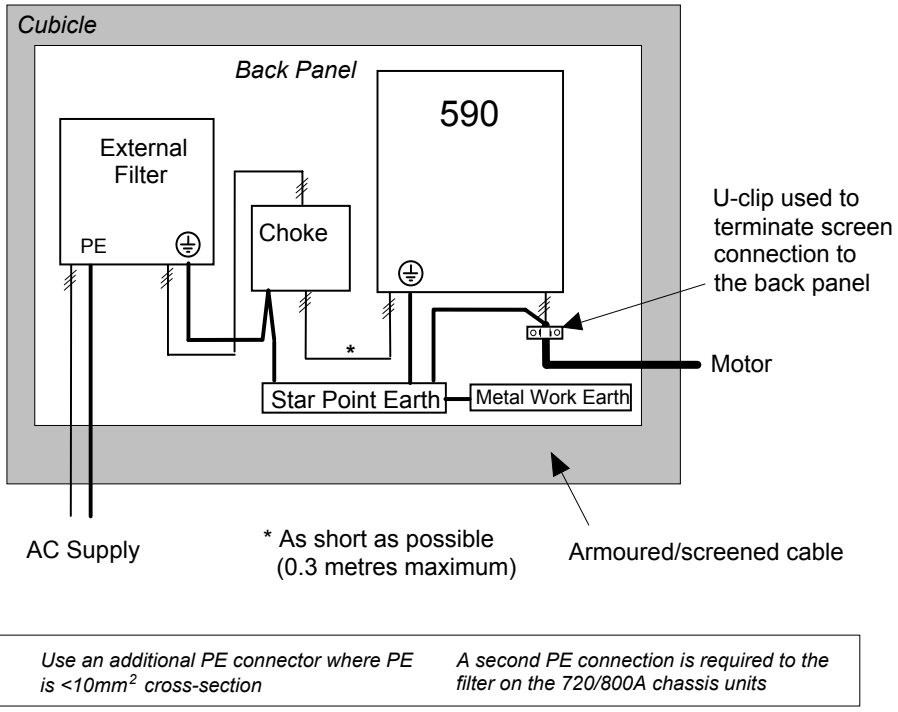

Use an additional PE connector where PE is <10mm² cross-section	*A second PE connection is required to the filter on the 720/800A chassis units*

Figure 0-1 EMC and Safety Earthing Cabling

Single VSD - Multiple Motors

Note: *Refer to Chapter 13: "Application Notes" - Using Multiple Motors on a Single Drive.*

If connecting multiple motors to a single VSD, use a star junction point for motor cable connections. Use a metal box with entry and exit cable glands to maintain shield integrity. Refer to Chapter 13: "Using Multiple Motors on a Single Converter".

Star Point Earthing

A star-point earthing policy separates `noisy' and `clean' earths. Four separate earth busbars (three are insulated from the mounting panel) connect to a single earth point (star point) near the incoming safety earth from the main supply. Flexible, large cross-section cable is used to ensure a low HF impedance. Busbars are arranged so that connection to the single earth point is as short as possible.

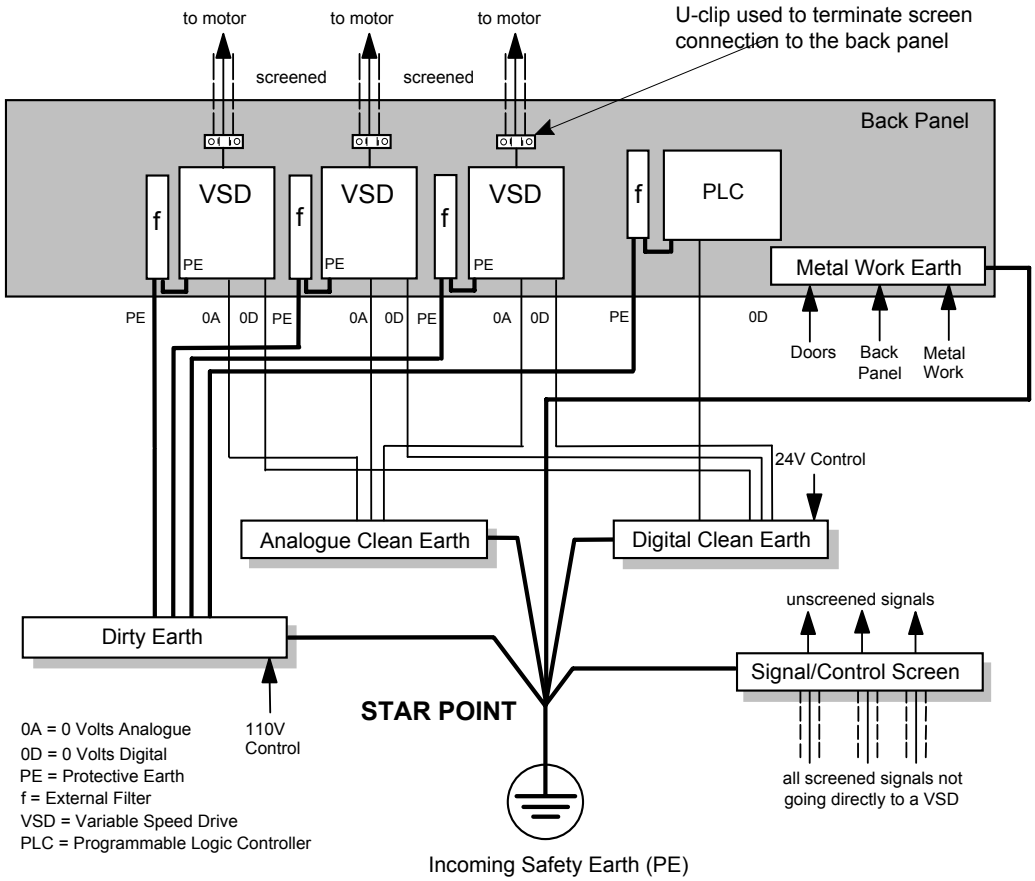

Figure 0-2 Star Point Earthing

1 Clean Earth Busbar (insulated from the mounting panel)

Used as a reference point for all signal and control cabling. This may be further subdivided into an analogue and a digital reference busbar, each separately connected to the star earthing point. The digital reference is also used for any 24V control.

2 Dirty Earth Busbar (insulated from the mounting panel)

Used for all power earths, i.e. protective earth connection. It is also used as a reference for any 110 or 220V control used, and for the control transformer screen.

3 Metal Work Earth Busbar

The back panel is used as this earth busbar, and should provide earthing points for all parts of the cubicle including panels and doors. This busbar is also used for power screened cables which terminate near to (10cm) the VSD - such as motor cables, braking choppers and their resistors, or between VSDs. Use U-clips to clamp the screened cables to the back panel to ensure optimum HF connection.

4 Signal/Control Screen Earth Busbar (insulated from the mounting panel)

Used for signal/control screened cables which **do not** go directly to the VSD. Place this busbar as close as possible to the point of cable entry. `U' clamp the screened cables to the busbars to ensure an optimum HF connection.

Sensitive Equipment

The proximity of the source and victim circuit has a large effect on radiated coupling. The electromagnetic fields produced by VSDs falls off rapidly with distance from the cabling/cubicle. Remember that the radiated fields from EMC compliant drive systems are measured at least 10m from the equipment, over the band 30-1000MHz. Any equipment placed closer than this will see larger magnitude fields, especially when very close to the Converter.

Do not place magnetic/electric field sensitive equipment within 0.25 metres of the following parts of the VSD system:

- Variable Speed Drive (VSD)
- EMC output filters
- Input or output chokes/transformers
- The cable between VSD and motor (even when screened/armoured)
- Connections to external braking chopper and resistor (even when screened/armoured)
- AC/DC brushed motors (due to commutation)
- DC link connections (even when screened/armoured)
- Relays and contactors (even when suppressed)

From experience, the following equipment is particularly sensitive and requires careful installation.

- Any transducers which produce low level analogue outputs (<1V) , e.g. load cells, strain gauges, thermocouples, piezoelectric transducers, anemometers, LVDTs
- Wide band width control inputs (>100Hz)
- AM radios (long and medium wave only)
- Video cameras and closed circuit TV
- Office personal computers
- Capacitive devices such as proximity sensors and level transducers
- Mains borne communication systems
- Equipment not suitable for operation in the intended EMC environment, i.e. with insufficient immunity to new EMC standards

Requirements for UL Compliance

Motor Overload Protection

Note: *An external motor overload protective device must be provided by the installer.*

Motor overload protection is provided in the controller by means of the thermal device in the motor winding. This protection cannot be evaluated by UL, hence it is the responsibility of the installer and/or the local inspector to determine whether the overload protection is in compliance with the National Electrical Code or Local Code requirements.

Branch Circuit/Short Circuit Protection Requirements

UL Recognized Component (JFHR2) semiconductor fuses with current ratings and maximum I^2t ratings as specified below must be installed upstream of the controller. Refer to the table below for the recommended fuse manufacturer and part number.

	Controller Rating	Semiconductor Fuses			
		Ratings			Part No. Littelfuse
(HP)	(A)	(V)	(A)	I^2t (A^2s)	(or equivalent*)
20	35	500Vac	40	1,000	L50S 40
40	70	500Vac	80	5,000	L50S 80
60	110	500Vac	125	10,000	L50S 125
80	150	500Vac	175	20,000	L50S 175
100	180	500Vac	175	20,000	L50S 175
150	270	500Vac	300	60,000	L50S 300
200	360	500Vac	400	110,000	L50S 400
250	450	500Vac	500	175,000	L50S 500
400	720	500Vac	800	450,000	L50S 800

* Other UL Recognized Component (JFHR2) semiconductor fuses may be installed upstream of the controller provided that the voltage, ampere and I^2t ratings shown above are not exceeded.

Note: *Semiconductor fuses are acceptable as branch circuit short-circuit protection for the solid-state motor controllers only.*

Table 0-1 Branch Circuit/Short Circuit Protection Requirements

Short Circuit Ratings

These products are suitable for use on a circuit capable of delivering not more than (the value shown in Table 0-2) RMS Symmetrical Amperes, 500V maximum.

Output Ratings			Short Circuit Rating
A	kW	Hp	RMS Symmetrical Amperes
35	15	20	5,000
70	30	40	5,000
110	45	60	10,000
150	60	80	10,000
180	75	100	10,000
270	110	150	10,000
360	150	200	18,000
450	190	250	18,000
720	300	400	30,000

Table 0-2 Short Circuit Ratings

Field Wiring Temperature Rating

Use 75°C copper conductors only.

Operating Ambient Temperature

For the operating ambient temperature range, refer to Chapter 11: “Technical Specifications”.

Field Wiring Terminal Markings

For the correct field wiring connections that are to be made to each terminal, refer to Chapter 3: “Power Wiring Connections” and “Control Wiring Connections”.

Terminal Tightening Torque

Power and Control Field Wiring Terminals

For the correct tightening torque value, refer to Chapter 11: “Technical Specifications”.

Field Grounding Terminals

The field grounding terminal(s) is identified with the International Grounding Symbol (IEC) Publication 417, Symbol 5019.

Field Terminal Kits

UL compliant Compression Lug Kits are available for the connection of power wiring for the following Converter ratings. These lugs must be applied with the correct tooling as described in the Installation Instructions provided with each Lug Kit.

Kit Part Number	Controller Rating (A)	Number of Lugs	Purpose	Wire Size	
LA386000U035	35	5	AC/DC	8 AWG	(8.4 mm^2)
LA386000U070	70	5	AC/DC	4 AWG	(21.2 mm^2)
LA386000U110	110	3	AC	2 AWG	(33.6 mm^2)
		2	DC	1/0 AWG	(53.5 mm^2)
LA386000U150	150	3	AC	1/0 AWG	(53.5 mm^2)
		2	DC	3/0 AWG	(85 mm^2)
LA386000U180	180	3	AC	3/0 AWG	(85 mm^2)
		2	DC	4/0 AWG	(107.5 mm^2)
LA386000U240	240	10 *	AC/DC	1/0 AWG	(53.5 mm^2)
LA386000U270	270	6 *	AC	1/0 AWG	(53.5 mm^2)
		4 *	DC	2/0 AWG	(67.5 mm^2)
LA386000U320	320	10*	AC/DC	3/0 AWG	(85mm^2)
LA386000U450	450	6*	AC	250kcmil	(127mm^2)
		4*	DC	300 kcmil	(152mm^2)
LA386000U720	720	10*	AC/DC	600kcmil	(304mm^2)
* 2 cables and lugs are required per terminal.					

Fuse Replacement Information

For fuse replacement information, refer to Chapter 11: “Technical Specifications”.

European Directives and the CE Mark

The following information is supplied to provide a basic understanding of the EMC and low voltage directives CE marking requirements. The following literature is recommended for further information:

- *Recommendations for Application of Power Drive Systems (PDS), European Council Directives - CE Marking and Technical Standardisation* - (CEMEP)

  Available from your local trade association or Parker SSD Drives office

- *EMC Installation Guidelines for Modules and Systems* - (SSD Drives)

  Available from your local Parker SSD Drives office, part number HA388879

- *Short Form Overview of European Directives for Variable Speed Drives and Applications* - (SSD Drives)

  Available from your local Parker SSD Drives office, part number HA389770

The European machines and drives manufacturers via their national trade associations have formed the European Committee of Manufacturers of Electrical Machines and Power Electronics (CEMEP). Parker SSD Drives and other major European drives manufacturers are working to the CEMEP recommendations on CE marking. The CE mark shows that a product complies with the relevant EU directives, in our case the Low Voltage Directive and, in some instances, the EMC Directive.

CE Marking for Low Voltage Directive

When installed in accordance with this manual, the 590 Series Converter is CE marked by Parker SSD Drives Ltd in accordance with the low voltage directive (S.I. No. 3260 implements this LVD directive into UK law). An EC Declaration of Conformity (low voltage directive) is included at the end of this chapter.

CE Marking for EMC - Who is Responsible?

Note: *The specified EMC emission and immunity performance of this unit can only be achieved when the unit is installed to the EMC Installation Instructions given in this manual.*

According to S.I. No. 2373 which implements the EMC directive into UK law, the requirement for CE marking this unit falls into two categories:

1. Where the supplied unit has an intrinsic/direct function to the end user, then the unit is classed as ***relevant apparatus***.
2. Where the supplied unit is incorporated into a higher system/apparatus or machine which includes (at least) the motor, cable and a driven load but is unable to function without this unit, then the unit is classed as a ***component***.

■ *Relevant Apparatus* - Parker SSD Drives Responsibility

Occasionally, say in a case where an existing fixed speed motor - such as a fan or pump - is converted to variable speed with an add-on drive module *(relevant apparatu*s), it becomes the responsibility of Parker SSD Drives to apply the CE mark and issue an EC Declaration of Conformity for the EMC Directive. This declaration and the CE mark is included at the end of this chapter.

■ *Component* - Customer Responsibility

The majority of Parker SSD Drives' products are classed as *components* and therefore we cannot apply the CE mark or produce an EC Declaration of Conformity in respect of EMC. It is therefore the manufacturer/supplier/installer of the higher system/apparatus or machine who must conform to the EMC directive and CE mark.

Legal Requirements for CE Marking

IMPORTANT: Before installation, clearly understand who is responsible for conformance with the EMC directive. Misappropriation of the CE mark is a criminal offence.

It is important that you have now defined who is responsible for conforming to the EMC directive, either:

■ Parker SSD Drives Responsibility

You intend to use the unit as *relevant apparatus.*

When the specified EMC filter is correctly fitted to the unit following EMC installation instructions, it complies with the relevant standards indicated in the following tables. The fitting of the filter is mandatory for the CE marking of this unit to apply.

The relevant declarations are to be found at the end of this chapter. The CE mark is displayed on the EC Declaration of Conformity (EMC Directive) provided at the end of this chapter.

■ Customer Responsibility

You intend to use the unit as a *component,* therefore you have a choice:

1. To fit the specified filter following EMC installation instructions, which may help you gain EMC compliance for the final machine/system.
2. Not to fit the specified filter, but use a combination of global or local filtering and screening methods, natural migration through distance, or the use of distributed parasitic elements of the existing installation.

Note: *When two or more EMC compliant components are combined to form the final machine/system, the resulting machine/system may no longer be compliant, (emissions tend to be additive, immunity is determined by the least immune component). Understand the EMC environment and applicable standards to keep additional compliance costs to a minimum.*

Applying for CE Marking for EMC

We have supplied a Manufacturer's EMC Declaration at the end of this chapter that you can use as a basis for your own justification of overall compliance with the EMC directive. There are three methods of demonstrating conformity:

1. Self-certification to a relevant standard
2. Third party testing to a relevant standard
3. Writing a technical construction file stating the technical rationale as to why your final machine/system is compliant. An EMC "competent body" must then assess this and issue a technical report or certificate to demonstrate compliance.
   Refer to Article 10(2) of Directive 89/336/EEC.

With EMC compliance, an EC Declaration of Conformity and the CE mark will be issued for your final machine/system.

IMPORTANT: Professional end users with EMC expertise who are using drive modules and cubicle systems defined as components who supply, place on the market or install the relevant apparatus must take responsibility for demonstrating EMC conformance and applying the CE mark and issuing an EC Declaration of Conformity.

Which Standards Apply?

Basic and Generic Standards

The standards that may apply to this unit come under two broad categories:

1. Emission - these standards limit the interference caused by operating (this) drive module.
2. Immunity - these standards limit the effect of interference (on this unit) from other electrical and electronic apparatus.

The following table indicates the standards that the unit may comply with, dependent upon how it is installed and used.

Assuming installation to EMC instructions in this manual *"Filter" refers to a specified external filter.*			Unit used as *Relevant Apparatus*		Unit used as a *Component*	
			filter *(EMC compliance)*	no filter	filter *(EMC compliance may be applied for)*	no filter
Installation	Basic and Generic Standards		enclosure	enclosure	enclosure	enclosure
Residential	Radiated RF Emission	EN55022 Class B (1994) or EN50081-1 (1992)	✓	✓	✓	✓
	Conducted RF Emission	EN55022 Class B (1994) or EN50081-1 (1992)				
	Immunity	EN50082-1 (1992)	✓	✓	✓	✓
Commercial & Light Industry	Radiated RF Emission	EN55022 Class B (1994) or EN50081-1 (1992)	✓	✓	✓	✓
	Conducted RF Emission	EN55022 Class B (1994) or EN50081-1 (1992)				
	Immunity	EN50082-1 (1992)	✓	✓	✓	✓
Industrial	Radiated RF Emission	EN55011 Class A (1991) or EN50081-2 (1994)	✓	✓	✓	✓
	Conducted RF Emission	EN55011 Class A (1991) or EN50081-2 (1994)	✓		✓	
	Immunity	prEN50082-2 (1992)	✓	✓	✓	✓

Table 12-1 Applicable Basic and Generic Standards

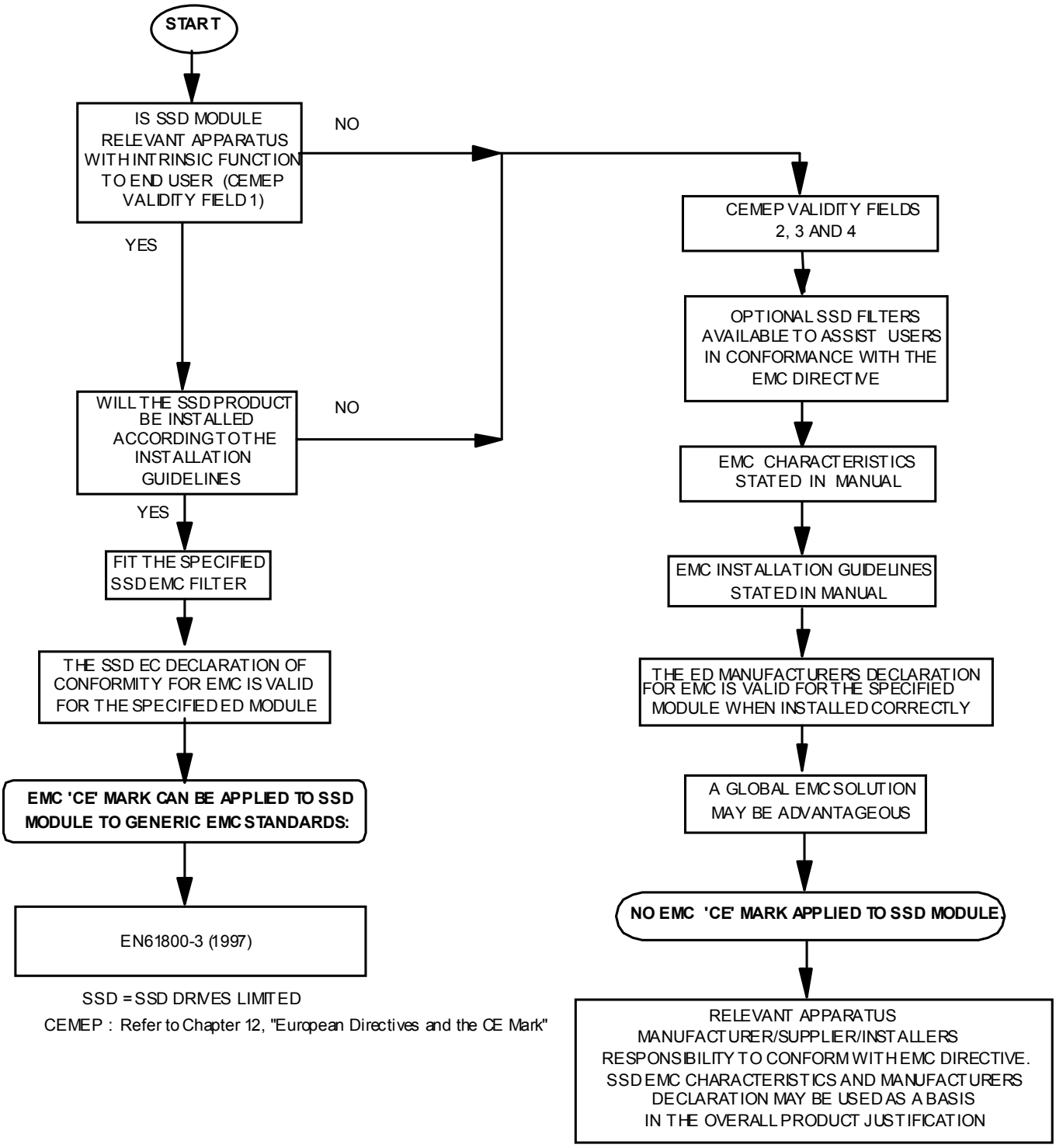

Figure 12-3 Parker SSD Drives EMC `CE' Mark Validity Chart

Certificates

590A/D/L (35 - 800 Amps)

EC DECLARATIONS OF CONFORMITY

Date CE marked first applied: 09/01/98 Issue C 07/02/07

Issued for compliance with the EMC Directive when the unit is used as *relevant apparatus*.

EMC Directive

In accordance with the EEC Directive 2004/108/EC
We Parker SSD Drives, address as below, declare under our sole responsibility that the above Electronic Products when installed and operated with reference to the instructions in the Product Manual (provided with each piece of equipment) is in accordance with the relevant clauses from the following standard:-

* BSEN61800-3 (2004)

Low Voltage Directive

In accordance with the EEC Directive 2006/95/EC.
We Parker SSD Drives, address as below, declare under our sole responsibility that the above Electronic Products when installed and operated with reference to the instructions in the Product Manual
(provided with each piece of equipment), is in accordance with the following standard :-

EN50178 (1998)

The drive is CE marked in accordance with the low voltage directive for electrical equipment and appliances in the voltage range when installed correctly.

MANUFACTURERS DECLARATIONS

This is provided to aid your justification for EMC compliance when the unit is used as a component.

EMC Declaration

We Parker SSD Drives, address as below, declare under our sole responsibility that the above Electronic Products when installed and operated with reference to the instructions in the Product Manual (provided with each piece of equipment) is in accordance with the relevant clauses from the following standard:-

* BSEN61800-3 (1997)

Machinery Directive

The above Electronic Products are components to be incorporated into machinery and may not be operated alone. The complete machinery or installation using this equipment may only be put into service when the safety considerations of the Directive 89/392/EEC are fully adhered to.
Particular reference should be made to EN60204-1 (Safety of Machinery - Electrical Equipment of Machines).
All instructions, warnings and safety information of the Product Manual must be adhered to.

Since the potential hazards are mainly electrical rather than mechanical, the drive does not fall under the machinery directive. However, we do supply a manufacturer's declaration for when the drive is used(as a component) in machinery.

Dr Martin Payn (Conformance Officer)

For information only.
 # Compliant with these immunity standards without specified EMC filters.

PARKER SSD DRIVES
NEW COURTWICK LANE, LITTLEHAMPTON, WEST SUSSEX BN17 7RZ
TELEPHONE: +44(0)1903 737000 FAX: +44(0)1903 737100
Registered Number: 4806503 England. Registered Office: 55 Maylands Avenue, Hemel Hempstead, Herts HP2 4SJ

STANDARD AND OPTIONAL EQUIPMENT

Standard Equipment

Power Board Circuit Descriptions

590/591 (AH385851U002, U003, U004, U005)

All chassis sizes 35A to 270A (2 Quad and 4 Quad - Low and High Volt)

Power supplies for the controller are generated from the single phase auxiliary supply via a switched mode power supply. The incoming supply is directly rectified to provide a high voltage dc power rail. A high voltage transistor switches this rail on to the primary of a high frequency transformer, the output of which is rectified and smoothed to provide the dc power supply rails. The +5V dc rail is monitored via a reference element and a control signal returned via an opto-isolator to the control element of the high voltage switching transistor. The ±15V dc rails are generated via separate secondary windings which are rectified, smoothed and stabilised by linear regulators. The SMPS operates over an input voltage range of 110V to 240V ac ±10%, 50/60Hz. The auxiliary supply fuse FS1 provides protection of the high voltage elements.

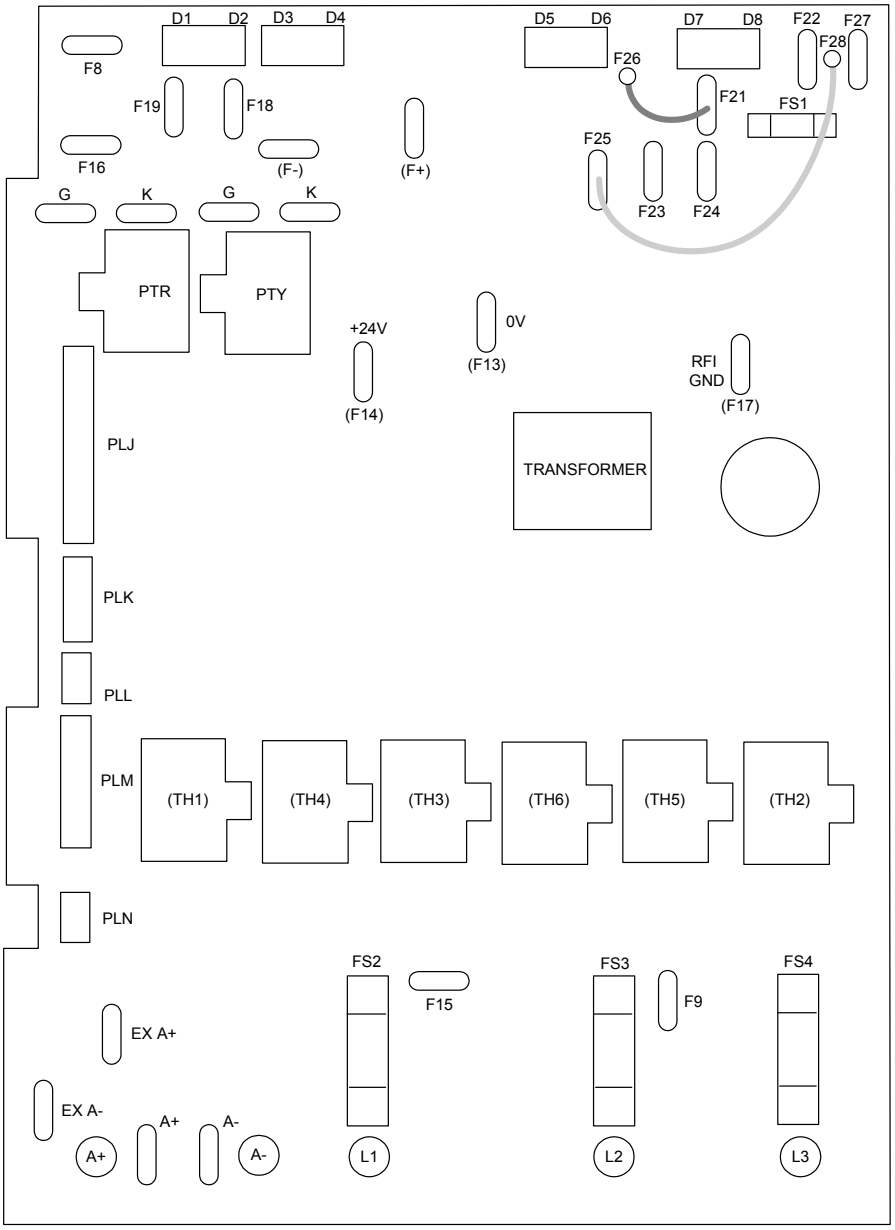

Figure 0-1 591 Power Board 2 Quad (AH385851U003, U004)

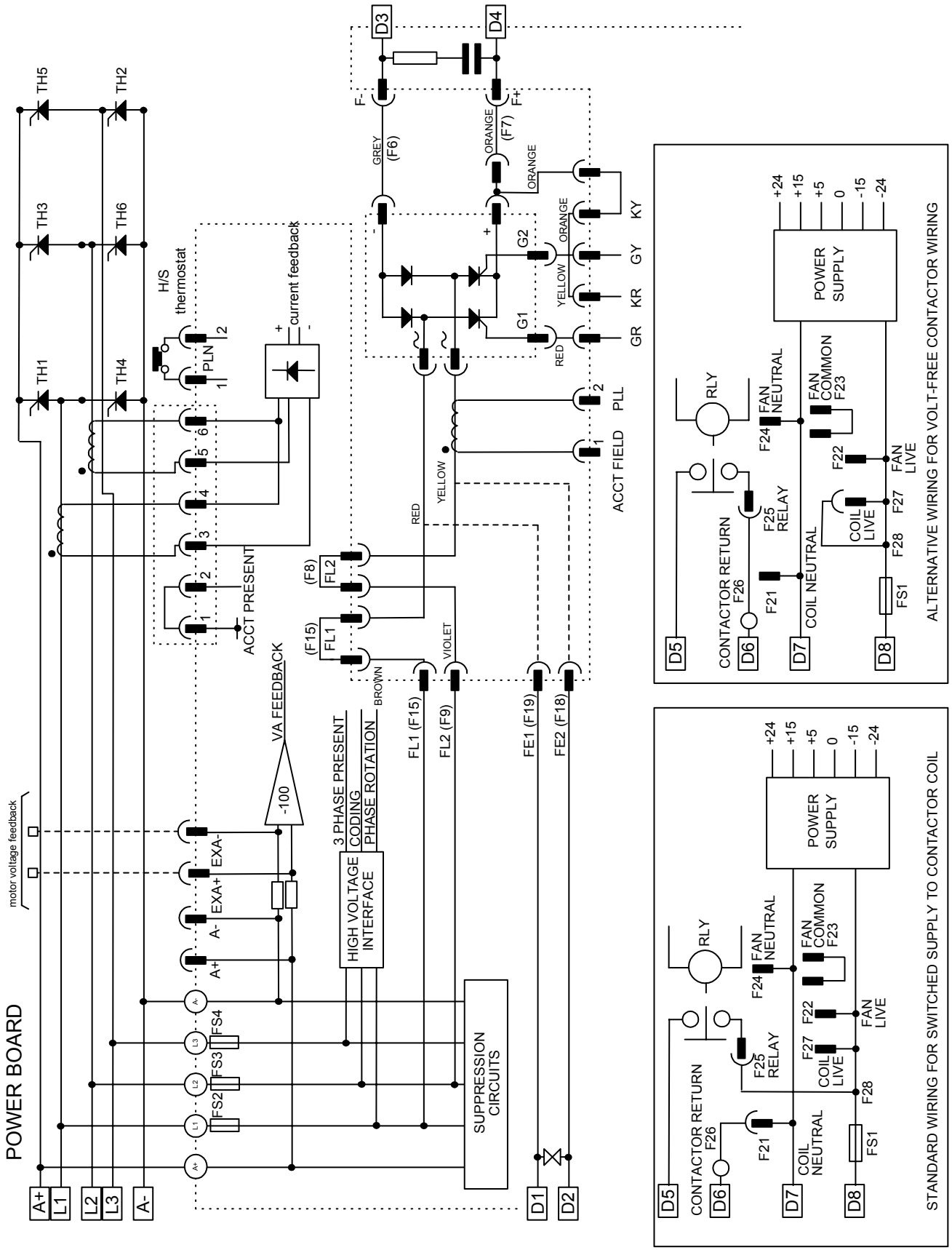

Figure 0-2 2 Quad Power Circuit - 35, 70, 110, 150, 180 & 270A using AH385851U003, U004

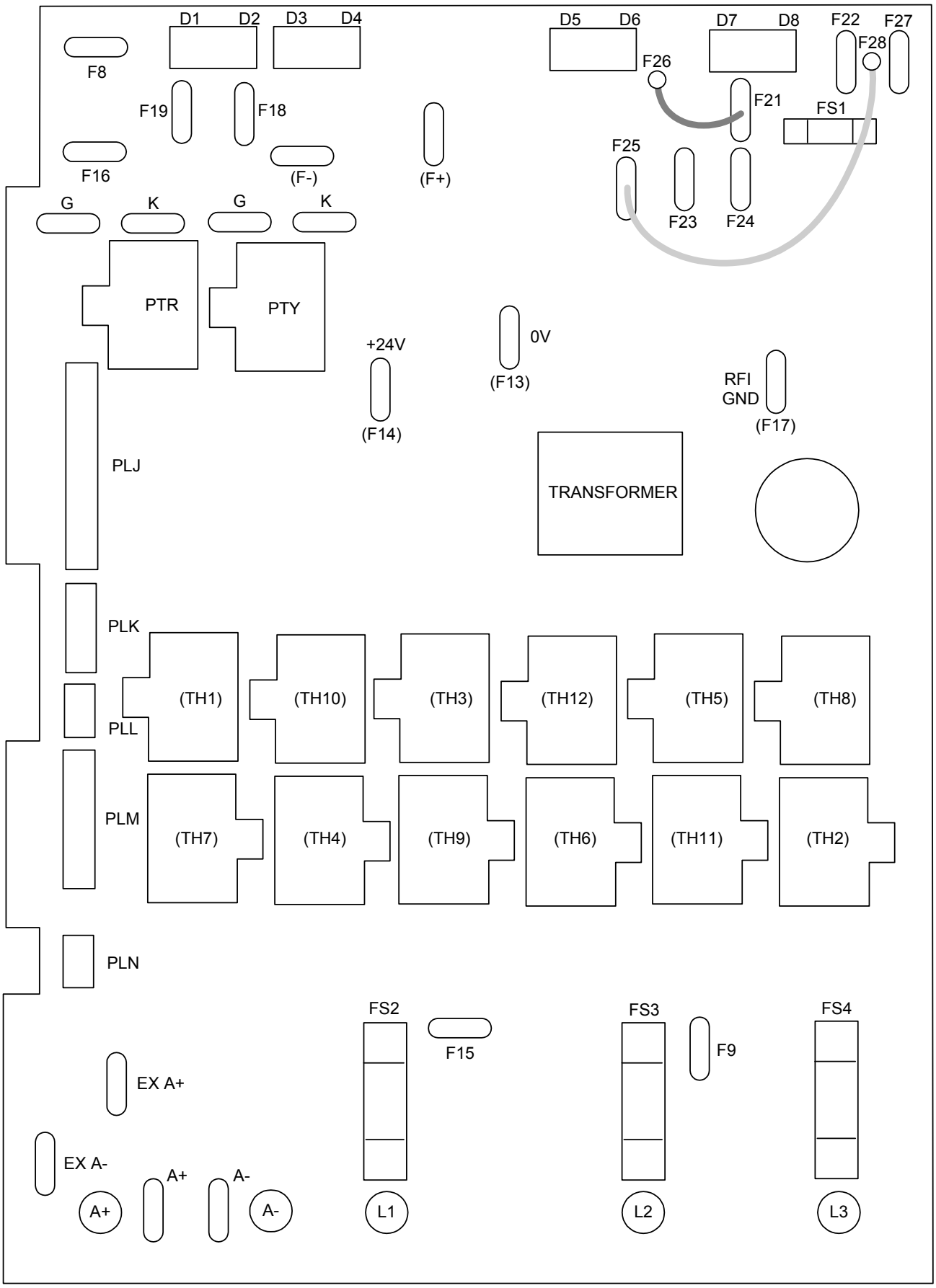

Figure 0-3 590 Power Board 4 Quad (AH385851U002, U005)

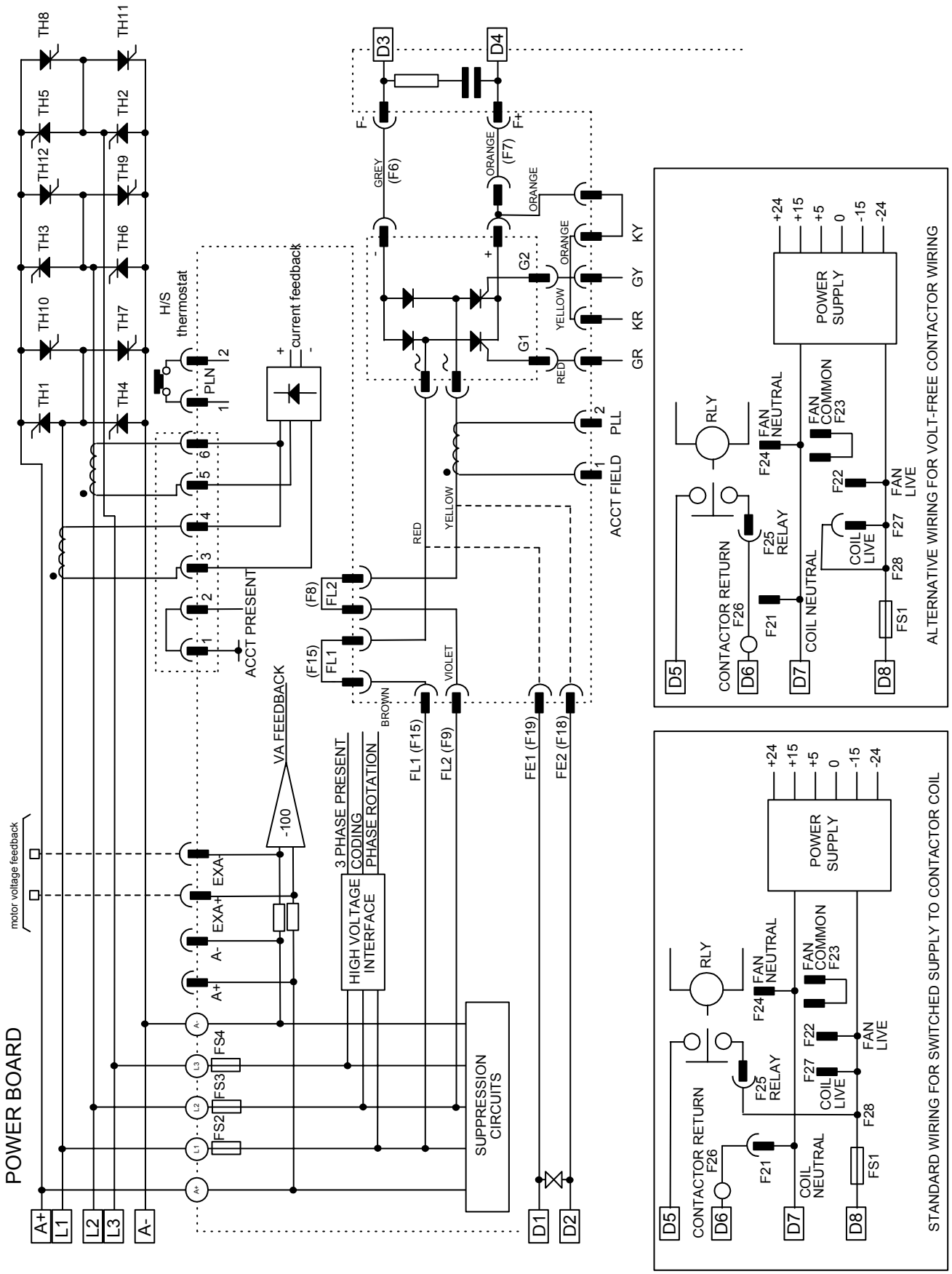

Figure 0-4 4 Quad Power Circuit - 35, 70, 110, 150, 180 & 270A using AH385851U002, U005

590/591 (AH385621U001)

All chassis sizes 271A to 720A (590 - 4 Quad, 591 - 2 Quad)

Power supply specification is as AH385851 described above, however, the board below is operated with Trigger Boards AH055036U002 and U003 and Suppression Board AI386001(see circuit diagrams).

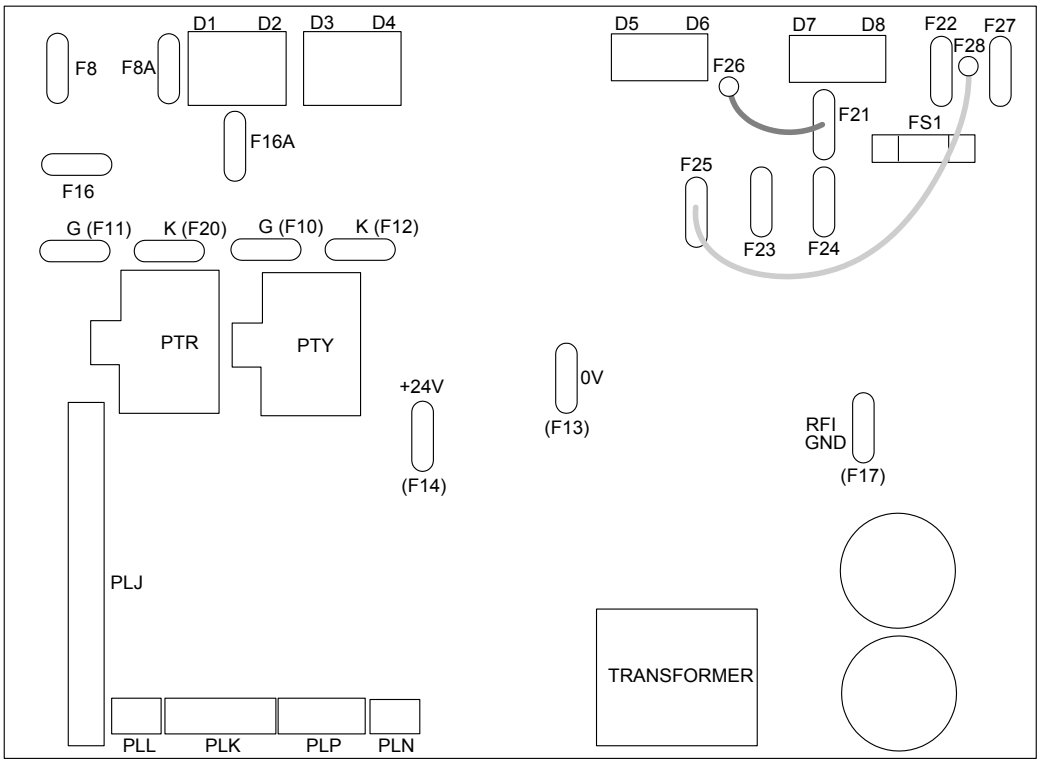

Figure 0-5 590/591 Power Board, 4 Quad and 2 Quad (AH385621U001)

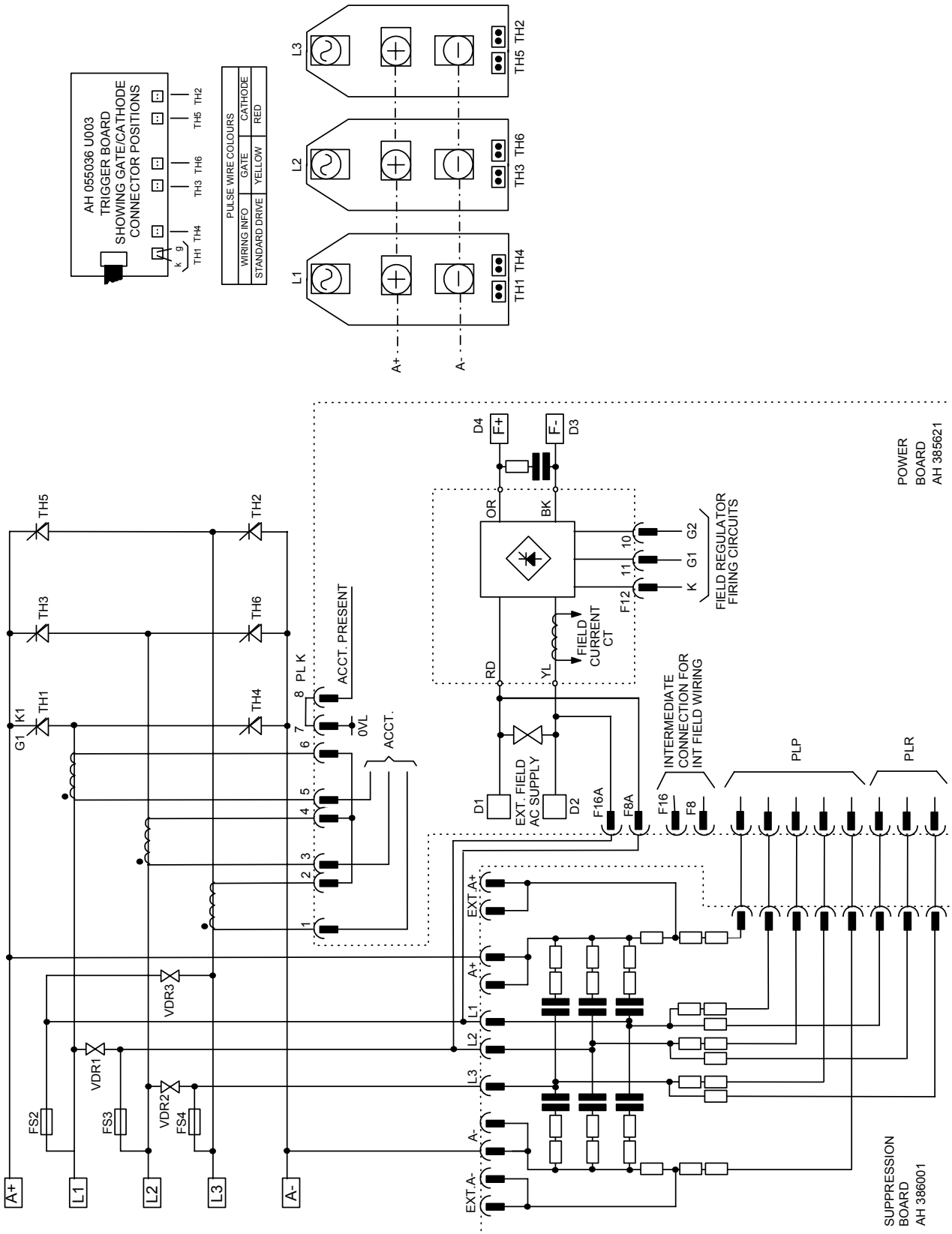

Figure 0-6 2 Quad Power Circuit - 271-450A Models using AH385621U001

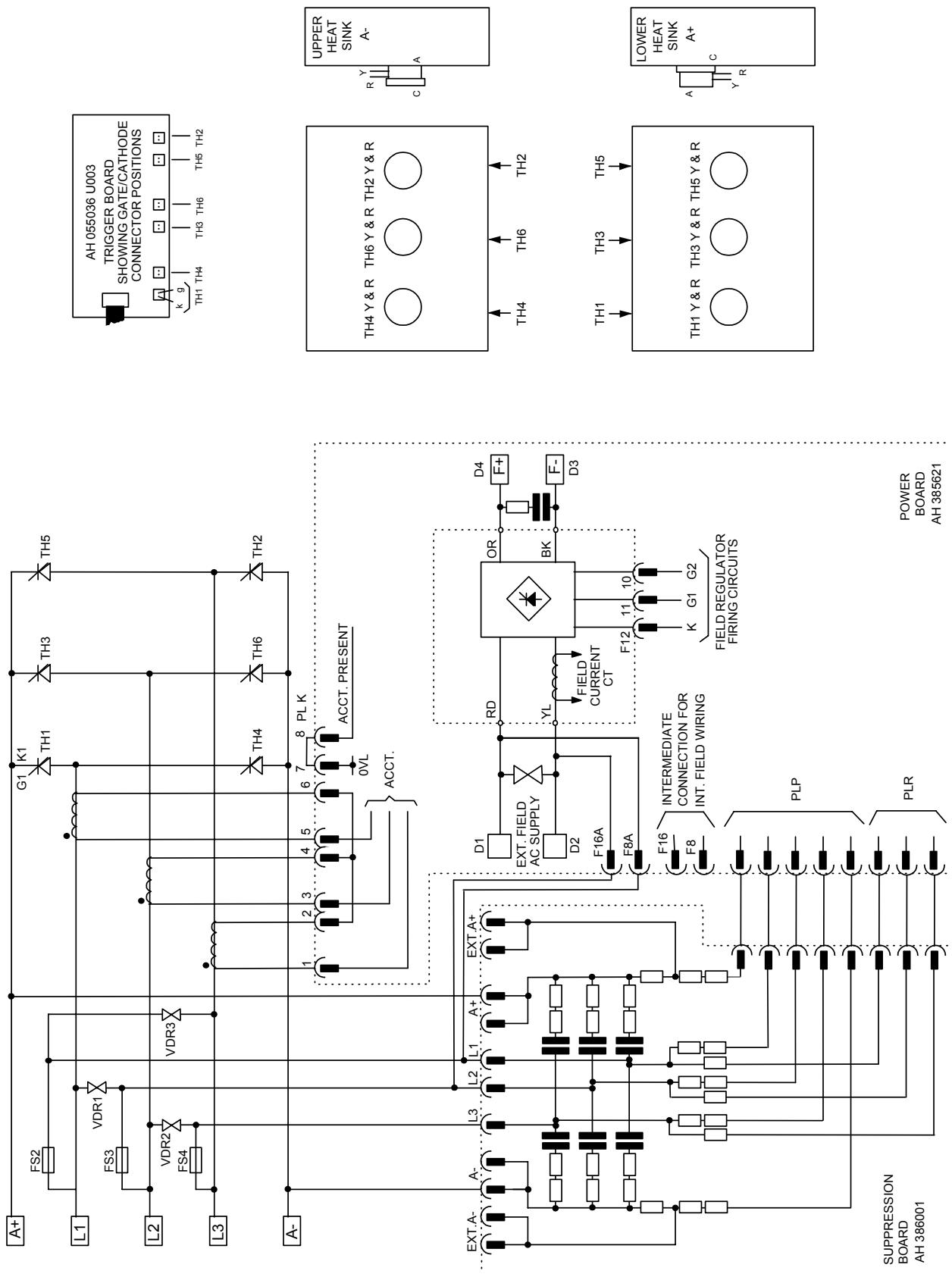

Figure 0-7 2 Quad Power Circuit - 451-720A Models using AH385621U001

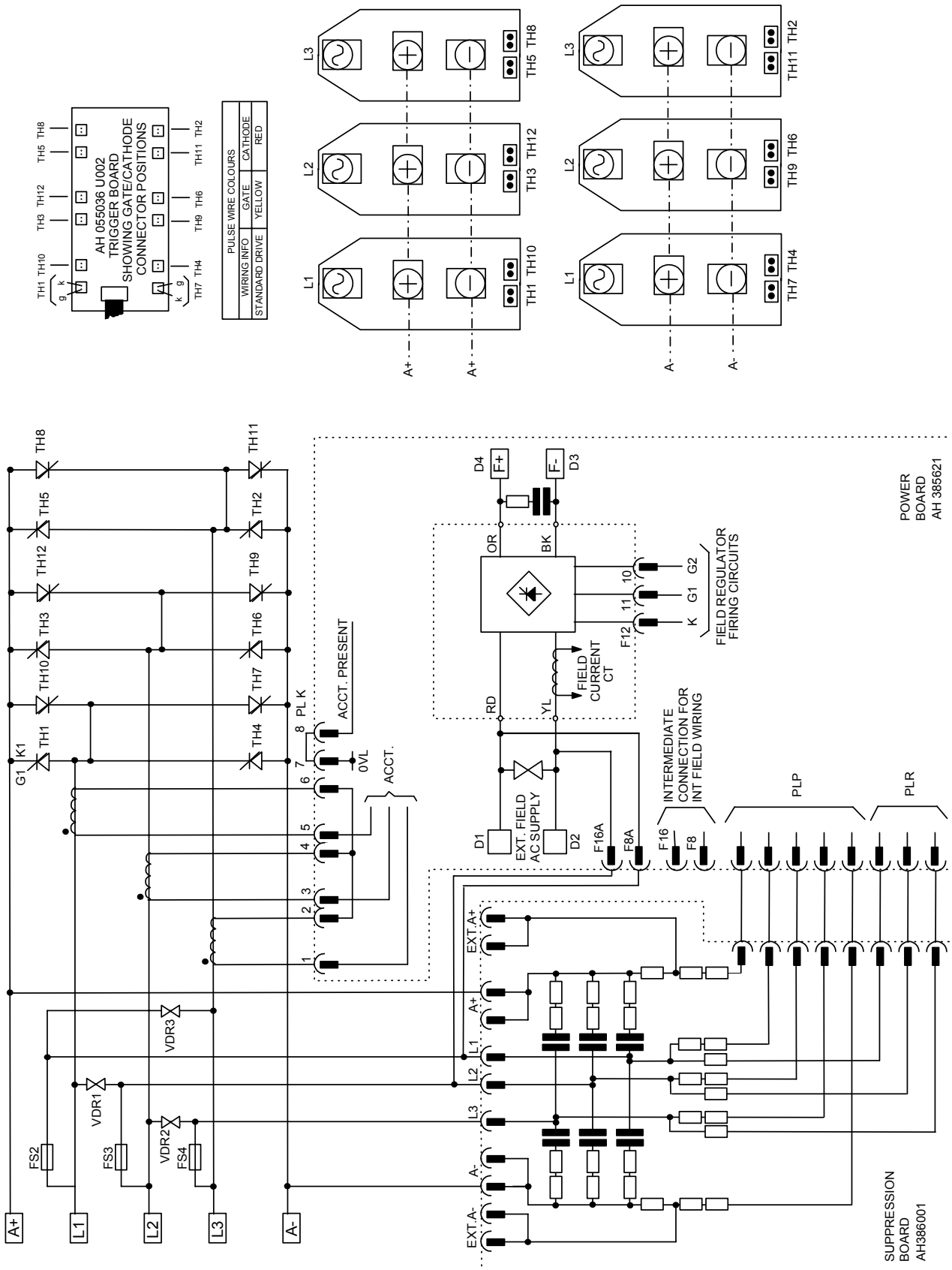

Figure 0-8 4 Quad Power Circuit - 271-450A Models using AH385621U001

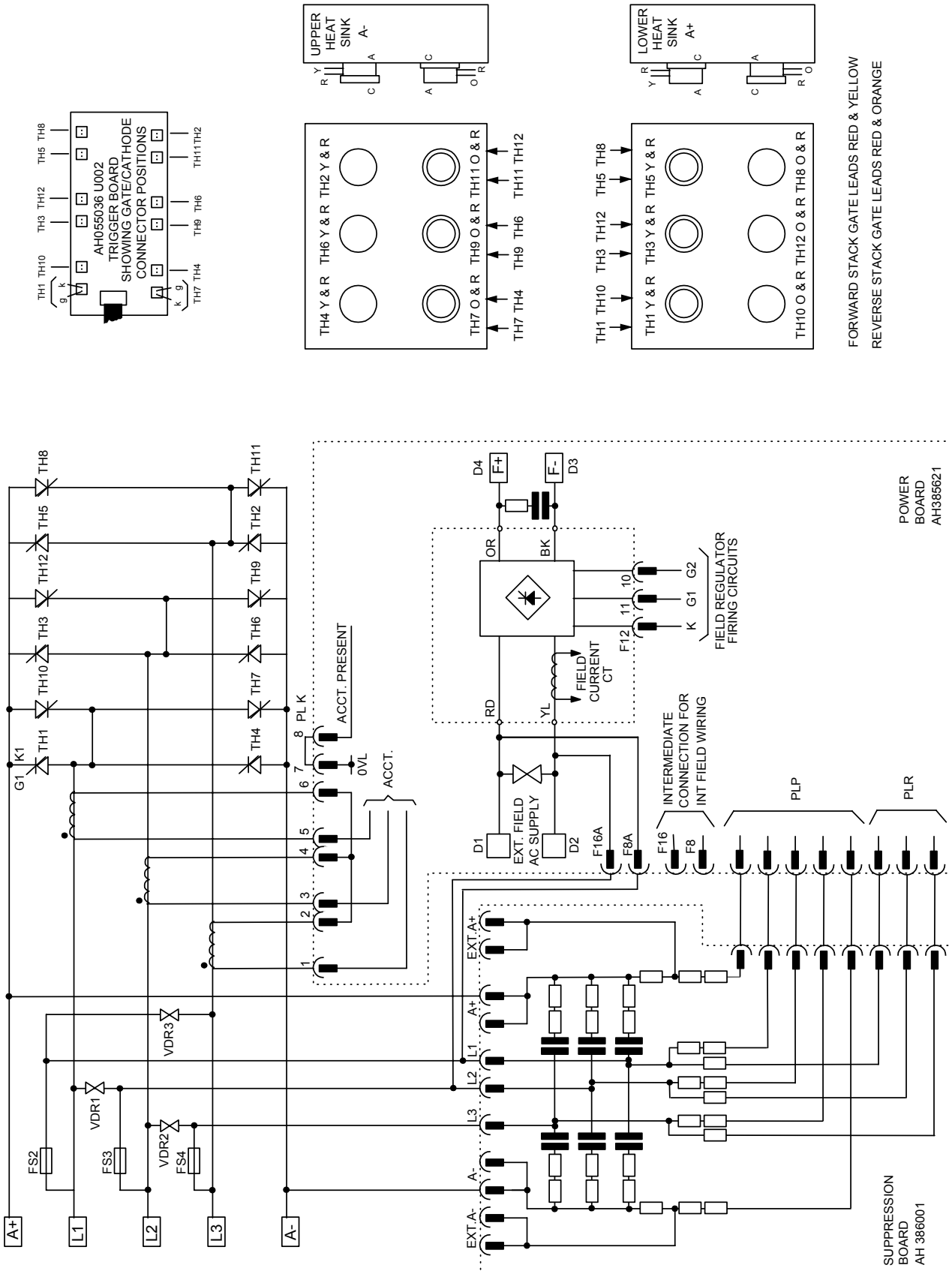

Figure 0-9 4 Quad Power Circuit - 451-720A Models using AH385621U001

598/599 Power Board (AH385128U009)

External stack drives from 720A upwards

The power supplies for the controller are generated from the single phase auxiliary supply via the control transformer. A bridge rectifier and filter capacitor feed an unregulated 40V dc supply to a high-efficiency switched mode pre-regulator. This generates 24V dc which is used for thyristor stack firing, digital I/O and other power functions. The logic supply is stabilised to +5V using a high-efficiency switched mode regulator. Stabilised ±15V supplies are generated for the analog hardware. All power supplies are short circuit protected, and the 40V and 5V supplies are protected against over voltage using a crowbar protection. The control transformer is provided with two primary taps which allow auxiliary supply voltages of 110V ac and 240V ac. The auxiliary supply fuse FS3 on the power supply PCB protects the control transformer primary. This fuse is also cleared should the crowbar operate, which can happen if the wrong auxiliary supply voltage tap is selected. Fuses FS1 and FS2 protect the cooling fan, and also the main contactor on 110/120V boards and the pilot relay on 220/240V boards.

This board is suitable for either 110-240V or 220-240V and is altered by a simple transformer tap change.

Heatsink Cooling Fan Connections

When fitted, these fans are connected on the power board to FAN LIVE (F27), FAN NEUTRAL (F24) and FAN COMMON (F23) as described below:

- A single fan should be matched to the auxiliary supply and connected to F27 and F24.
- Two fans using a 110/115V auxiliary supply should be connected in parallel to F27 and F24.
- Two fans using a 220/240V auxiliary supply should be connected in series to F27 and F24 using F23 as the centre point.

Contactor Supply

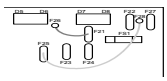

The controller requires an ac or dc power contactor in series with the main power path to ensure correct power-up sequencing. This contactor is directly initiated by the Microcontroller via an isolating relay which drives the contactor coil with the same voltage as that of the auxiliary supply.

This is achieved by the brown wire connection from COIL LIVE (F28) to RELAY (F25) and the blue wire connection from COIL NEUTRAL (F21) to CONTACTOR RETURN (F26).

However, if an alternative supply for the contactor coil is required move the brown wire from F25 to F22 , and move the blue wire from F21 to F25. The external coil supply can now be switched using a volt-free contact between terminals D5 and D6.

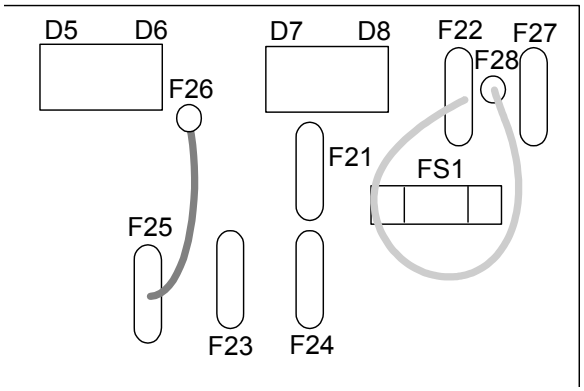

Optional Equipment

Contact your local Parker SSD Drives office to order optional equipment.

Item	Part Number
EMC Installation Guidelines for Modules and Systems *A Parker SSD Drives application manual detailing EMC requirements*	HA388879
590 Digital Section Control *A Parker SSD Drives application manual detailing the use of the block diagram to implement open and closed loop control of driven web section rolls*	HA388664
590 Digital Closed Loop Centre Winder *A Parker SSD Drives application manual detailing the use of the block diagram to implement closed loop centre winders*	HA388202
ConfigEd Lite *Parker SSD Drives' Windows-based block programming software*	Order by name
External AC Supply (RFI) Filter *For Converters without internal filters, on cable runs in excess of 25 metres*	Refer to Chapter 11: "External AC Supply (RFI) Filters" for Part Numbers
Microtach Option Board *Two board types for connecting to a plastic or glass fiber Microtach encoder* • *Glass* • *Plastic*	 AH386025U001 AH386025U002
Encoder Option Board *A board to interface to a wire-ended encoder*	AH387775U001 (universal)
Tacho Calibration Option Board *A switchable calibration board for interfacing to AC/DC analog and/or digital tachogenerators*	AH385870U001
Comms Option Board (P1) Board *Two board types for supporting EI BYSYNCH or PROFIBUS communication protocols for connection to other equipment.* • *EI BYSYNCH (RS422, RS485)* • *PROFIBUS*	 AH385826U001 AH389918U001

Table 0-1 Optional Equipment

Speed Feedback Option Boards

Each option board below is shown with the correct selection for the SPEED FBK SELECT parameter.

The selections are ARM VOLTS FBK, ANALOG TACH, ENCODER and ENCODER/ANALOG.

(ARM VOLTS FBK is default and requires no option board).

MMI Menu Map

1 SETUP PARAMETERS

2 SPEED LOOP

SPEED FBK SELECT

Microtach Option Board

There are two kinds of Parker SSD Drives' Microtach, each requiring a different board:

- 5701 Microtach (plastic fibre)
- 5901 Microtach (glass fibre)

If fitted, refer to the Microtach Technical Manual for further information.

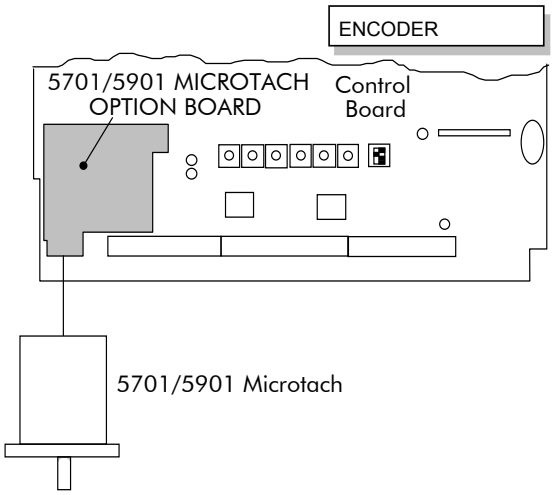

Wire-Ended Encoder Option Board

The board accepts connection from a wire-ended encoder.

If fitted, refer to the Encoder Technical Manual for further information.

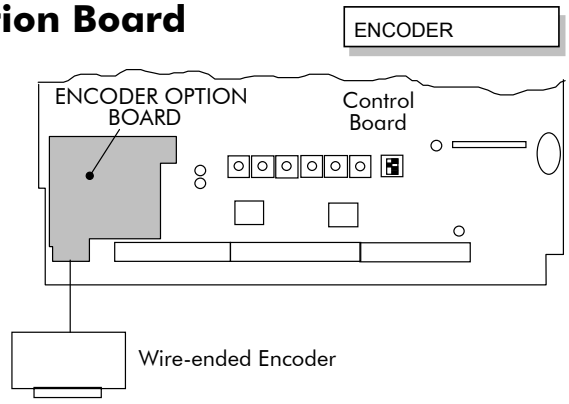

Tacho Calibration Option Board

The board accepts connection from an analog tachogenerator.

If fitted, refer to the Tachogenerator Technical Manual for further information.

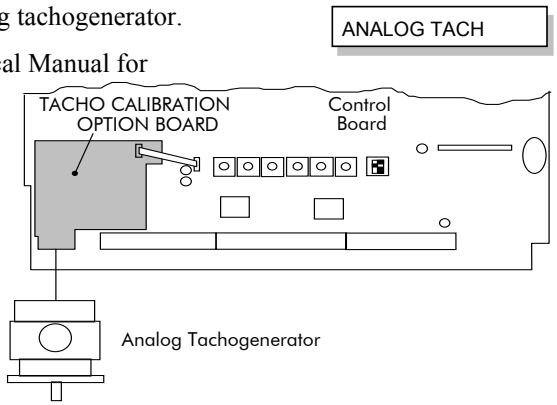

Combined Tacho and Encoder Feedback

If an analog tachogenerator and digital encoder are to be used, the Encoder Option Board receives the digital signal, the analog signal is routed to Terminals B2 (Tacho) and B1 (0V). Please refer to Parker SSD Drives Sales for the correct resistor selection for Terminal B2.

If fitted, refer to the relevant Technical Manual for further information.

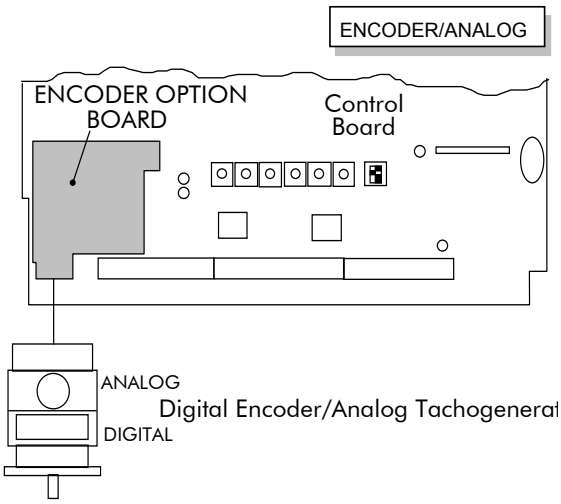

Communications Option Boards

Comms Option Board (P1)

Two protocols are supported, each requiring a different board:

- EI BYSINCH (EI BINARY or EI ASCII)
- PROFIBUS (OPTION)

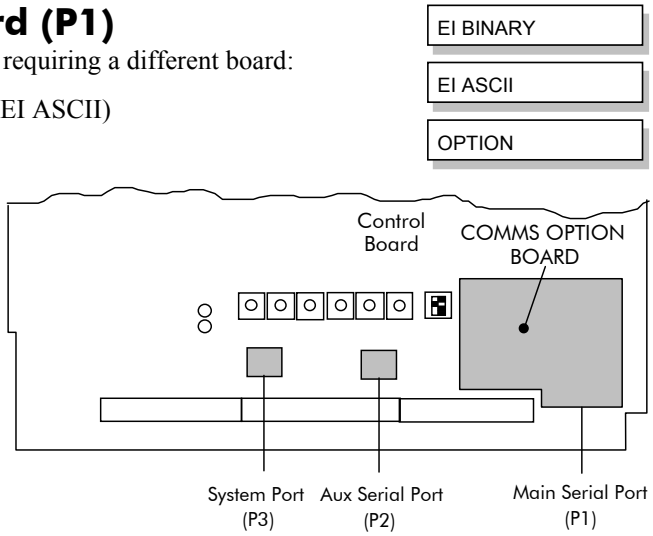

The board allows the 590 Converter to be controlled as part of a system. The system can also comprise other Parker SSD Drives products such as the 605 and 584SV Inverters, or any other equipment using the same protocol.

Remote 5721 Operator Station

This is remotely mounted and intended for use by process line operators to monitor and, if required, change the value of process variables. It can also be used as a diagnostic tool. It requires an external 24V power supply and uses ports P1 or P2. Contact Parker SSD Drives for further information.

SERIAL COMMUNICATIONS

Main Serial Port (P1)

The plug-in COMMS Option Board provides a serial data port, allowing Converters to be linked to form a network. Using a PLC/SCADA or other intelligent device, this network can be continuously controlled to provide supervision and monitoring for each Converter in the system.

Refer to the COMMS Option Board Technical Manual for further details.

Aux Serial Port (P2)

This is an un-isolated RS422 using the EI-BISYNCH protocol, it can be used to connect to any suitable unit point-to-point.

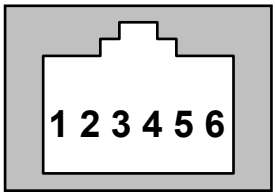

P2 Port Pin	Signal
1	RXA
2	0V
3	+24V
4	RXB
5	TXB
6	TXA

Auxiliary Port (P2) Set-up

The P2 port requires configuring using the MMI before a unit is connected. Remember to perform a PARAMETER SAVE on the Converter.

Refer to Chapter 6: “Programming Your Application” - AUX PORT (P2) for parameter details.

MMI Menu Map

1 SERIAL LINKS

2 AUX PORT P2
- SRL LINK ENABLE
- GROUP ID (GID)
- UNIT ID (UID)
- PROTOCOL
- BAUD RATE
- ESP SUP. (ASCII)
- CHANGEBAND (BIN)
- ERROR REPORT
- PNO. 7

5721 Operator Station

The main purpose for the P2 port is to connect the 5721 Operator Station for controlling the 5720 Quadraloc controller. Refer to the 5721 Operator Station Technical Manual for further details.

System Port (P3)

This port has several uses:

1. **ConfigEd Lite**: Parameters can be monitored and updated by ConfigEd Lite (or other suitable PC programming tool)

2. **UDP Support**: It can be used to upload and download information to a PC

3. **5703 Support**: A Parker SSD Drives 5703 Setpoint Repeater Unit can be connected

The port is an un-isolated RS232, 19200 Baud, supporting the standard EI BISYNCH ASCII communications protocol, contact Parker SSD Drives for further information.

A standard P3 lead is used to connect to the Converter.

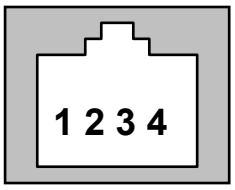

P3 Port Pin	Lead	Signal
1	Black	0V
2	Red	24V
3	Green	TX
4	Yellow	RX

6-Way Lead to DB9/DB25 Connector

Note: *There is 24V present on pin 2 of the P3 port. This may damage your PC or the Converter.*

P3 Port Pin	Lead	Female DB9 Pin	Female DB25 Pin
1	Black	5	7
2	Red	not connected	not connected
3	Green	2	3
4	Yellow	3	2

ConfigEd Lite

This is Parker SSD Drives' Windows-based block programming software. It has a graphical user-interface and drawing tools to allow you to create block programming diagrams quickly and easily. Contact your local Parker SSD Drives sales office.

UDP Support

The P3 port can be used to transfer an ASCII representation of the converter's settings between the Converter and a host computer.

The transfer uses a simple ASCII file structure and XON / XOFF protocol. This is provided by most communications packages. Host computers tested include IBM PCs XT/AT, running both Windows and MSDOS, Psion Organiser 3 and many more.

Transferring data from the Converter to a host computer is defined as "Downloading" ,whereas transferring data from a host computer to the Converter is defined as "Uploading".

Refer to Chapter 6: "Programming Your Application" - P3 SETUP for parameter details.

UDP Menu Structure

```
......SYSTEM PORT (P3)
........P3 SETUP
..........MODE //              Disable/5703 Setup Mode
..........5703 SUPPORT //      Submenu for 5703 parameters
..........P3 BAUD RATE //      Baud rate for the P3 Port
........DUMP MMI -> P3 //      Transfer the MMI to Host
........UDP XFER <- P3 //      Transfer Parameters From Host
........UDP XFER -> P3 //      Transfer Parameters To Host
```

SYSTEM PORT (P3) Setup

Set MODE parameter (Tag No. 130) to DISABLE (default) using the MMI

Set P3 BAUD RATE parameter (Tag No. 198) to 9600 (default) using the MMI

1 Stop bit (fixed)

NO Parity (fixed)

8 bits (fixed)

XON/XOFF Handshaking (fixed)

MMI Menu Map

1 SERIAL LINKS
2 SYSTEM PORT P3
3 P3 SETUP
- MODE
- P3 BAUD RATE

UDP Transfer Procedure

UDP UpLoad (UDP XFER <- P3)

This is the transfer of the parameters from the host computer to the Converter. This information is written directly to EEprom, so **all the drive's current settings will be overwritten**.

MMI Menu Map

1 SERIAL LINKS
2 SYSTEM PORT P3
- DUMP MMI -> P3
- UDP XFER <- P3
- UDP XFER -> P3

- Connect the Converter to the host using the appropriate lead.
- Using a standard communications package prepare the host to transfer an ASCII file. Remember to set up the host's serial port first.
- Set the P3 MODE parameter to DISABLE.
- Start uploading on the Converter by selecting UDP XFER <- P3 on the MMI and pressing the UP (↑) key, as instructed.
- When the Converter says RECEIVING, begin the file transmission.
- The file ends in a **`:00000001FF`** which the Converter uses to close the file.
- As indicated, reset the Converter by pressing the **E** key.

UDP Download (UDP XFER -> P3)

This is the transfer of the parameters from the Converter to a host computer. This information fully describes the Converter's settings in a Binary format.

- Connect the Converter to the host using the appropriate lead.
- Using a standard communications package prepare the host to receive an ASCII file. Remember to set up the host's serial port first.
- Perform a PARAMETER SAVE of the Converter's settings. This ensures the Dump matches the Converter’s settings, (the listing is of the Converter's currently saved settings, i.e. held in EEprom.
- Set the P3 MODE parameter to DISABLE.
- Prepare the host PC to receive a file; use the file extension .UDP to differentiate it from .MMI format files.
- Start downloading on the Converter by selecting UDP XFER -> P3 on the MMI and pressing the UP (↑) key, as instructed.

- The file ends in a ctrl-z. With some packages this automatically closes the downloaded file but if this is not the case, when the Converter says it has finished and the host has stopped scrolling text, close the file by hand. The last line should read **:00000001FF**

The file can now be treated like any normal file.

Download MMI (MMI DUMP -> P3)

This is the transfer of the MMI description from the Converter to a host computer. This information fully documents the Converter's settings in a textual format that is clear and easy to read.

- Connect the Converter to the host using the appropriate lead.
- Using a standard communications package prepare the host to receive an ASCII file. Remember to set up the host's serial port first.
- Perform a PARAMETER SAVE of the Converter's settings. This ensures the Dump matches the Converter's settings, (the listing is of the current settings, NOT the saved settings held in EEprom).
- Set the P3 MODE parameter to DISABLE.
- Prepare the host PC to receive a file; use the file extension .MMI to differentiate it from .UDP format files.
- Start downloading on the Converter by selecting DUMP MMI -> P3 on the MMI and pressing the UP (↑) key, as instructed.
- The file ends in a ctrl-z. With some packages this automatically closes the file but if this is not the case, when the Converter says it has finished and the host has stopped scrolling text, close the file by hand.
- The file can now be treated like any normal text file.

MMI Dump

The following file was produced by performing a DUMP MMI -> P3 to a PC, as described above. This file shows the Converter default settings.

Note: *When printing this file, it is useful to select a proportionally-spaced text, such as Courier, so that the text columns line-up. Note that in the list below, `menus' have been highlighted (bold) to make the list easier to use.*

```
DIGITAL DC DRIVE
ISSUE:4.4
..MENU LEVEL
....DIAGNOSTICS
......SPEED DEMAND     [89  ] =     0.00 %
......SPEED FEEDBACK   [207 ] =     0.00 %
......SPEED ERROR      [297 ] =     0.00 %
......CURRENT DEMAND   [299 ] =     0.00 %
......CURRENT FEEDBACK [298 ] =     0.00 %
......POS. I CLAMP     [87  ] =      0.0 %
......NEG. I CLAMP     [88  ] =      0.0 %
......ACTUAL POS I LIM [67  ] =      0.0 %
......ACTUAL NEG I LIM [61  ] =      0.0 %
......INVERSE TIME O/P [203 ] =   200.00 %
......AT CURRENT LIMIT [42  ] = FALSE
......AT ZERO SPEED    [77  ] = TRUE
......AT ZERO SETPOINT [78  ] = TRUE
......AT STANDSTILL    [79  ] = TRUE
......STALL TRIP       [112 ] = OK
......RAMPING          [113 ] = FALSE
......PROGRAM STOP     [80  ] = TRUE
......DRIVE START      [82  ] = OFF
......DRIVE ENABLE     [84  ] = DISABLED
......OPERATING MODE   [212 ] = STOP
......FIELD ENABLE     [169 ] = DISABLED
......FIELD DEMAND     [183 ] =     0.00 %
......FIELD I FBK.     [300 ] =     0.00 %
......FLD.FIRING ANGLE [184 ] =        0 DEG
......ANIN 1 (A2)      [50  ] =     0.00 VOLTS
......ANIN 2 (A3)      [51  ] =     0.00 VOLTS
......ANIN 3 (A4)      [52  ] =     0.00 VOLTS
......ANIN 4 (A5)      [53  ] =     0.00 VOLTS
......ANIN 5 (A6)      [54  ] =     0.00 VOLTS
......ANOUT 1 (A7)     [55  ] =     0.00 VOLTS
......ANOUT 2 (A8)     [56  ] =     0.00 VOLTS
......START (C3)       [68  ] = OFF
......DIGITAL INPUT C4 [69  ] = OFF
......DIGITAL INPUT C5 [70  ] = OFF
......DIGIN 1 (C6)     [71  ] = OFF
......DIGIN 2 (C7)     [72  ] = OFF
......DIGIN 3 (C8)     [73  ] = OFF
......DIGOUT 1 (B5)    [74  ] = ON
......DIGOUT 2 (B6)    [75  ] = ON
......DIGOUT 3 (B7)    [76  ] = OFF
......RAISE/LOWER O/P  [264 ] =     0.00 %
......PID OUTPUT       [417 ] =     0.00 %
......PID CLAMPED      [416 ] = FALSE
......PID ERROR        [415 ] =     0.00 %
......SPT SUM OUTPUT   [86  ] =     0.00 %
......RAMP OUTPUT      [85  ] =     0.00 %
......SPEED SETPOINT   [63  ] =     0.00 %
......TERMINAL VOLTS   [57  ] =      0.0 %
......BACK EMF         [60  ] =      0.0 %
......TACH INPUT (B2)  [308 ] =      0.0 %
......ENCODER          [206 ] =        0 RPM
....SETUP PARAMETERS
......RAMPS
........RAMP ACCEL TIME  [2   ] =      0.1 SECS   *
........RAMP DECEL TIME  [3   ] =      0.1 SECS   *
........CONSTANT ACCEL   [4   ] = ENABLED
........RAMP HOLD        [118 ] = OFF
........RAMP INPUT       [5   ] =     0.00 %
........ % S-RAMP        [266 ] =     2.50 %
........RAMPING THRESH.  [286 ] =     0.50 %
........AUTO RESET       [287 ] = ENABLED
........EXTERNAL RESET   [288 ] = DISABLED
```

```
........RESET VALUE      [422 ] =     0.00 %
........MIN SPEED        [126 ] =     0.00 %
......AUX I/O
........AUX START        [161 ] = ON
........AUX JOG          [227 ] = ON
........AUX ENABLE       [168 ] = ON
........AUX DIGOUT 1     [94  ] = OFF
........AUX DIGOUT 2     [95  ] = OFF
........AUX DIGOUT 3     [96  ] = OFF
........ANOUT 1          [128 ] =     0.00 %
........ANOUT 2          [129 ] =     0.00 %
........JOG/SLACK        [496 ] = OFF
........ENABLE           [497 ] = OFF
......JOG/SLACK
........JOG SPEED 1      [218 ] =     5.00 %
........JOG SPEED 2      [219 ] =    -5.00 %
........TAKE UP 1        [253 ] =     5.00 %
........TAKE UP 2        [254 ] =    -5.00 %
........CRAWL SPEED      [225 ] =    10.00 %
........MODE             [228 ] = FALSE
........RAMP RATE        [355 ] =      1.0 SECS
......RAISE/LOWER
........RESET VALUE      [255 ] =     0.00 %
........INCREASE RATE    [256 ] =     10.0 SECS
........DECREASE RATE    [257 ] =     10.0 SECS
........RAISE INPUT      [261 ] = FALSE
........LOWER INPUT      [262 ] = FALSE
........MIN VALUE        [258 ] =  -100.00 %
........MAX VALUE        [259 ] =   100.00 %
........EXTERNAL RESET   [307 ] = FALSE
......SPECIAL BLOCKS
........DIAMETER CALC.
..........LINE SPEED       [424 ] =     0.00 %
..........REEL SPEED       [437 ] =     0.00 %
..........MIN DIAMETER     [425 ] =    10.00 %
..........MIN SPEED        [426 ] =     5.00 %
..........RESET VALUE      [462 ] =    10.00 %
..........EXTERNAL RESET   [463 ] = DISABLED
..........RAMP RATE        [453 ] =      5.0 SECS
..........DIAMETER         [427 ] =     0.00 %
........TAPER CALC.
..........TAPER            [438 ] =     0.00 %
..........TENSION SPT.     [439 ] =     0.00 %
..........TAPERED DEMAND   [452 ] =     0.00 %
..........TENSION TRIM     [440 ] =     0.00 %
..........TOT.TENS.DEMAND  [441 ] =     0.00 %
........TORQUE CALC.
..........TORQUE DEMAND    [432 ] =     0.00 %
..........TENSION ENABLE   [433 ] = ENABLED
..........OVER WIND        [434 ] = ENABLED
........SETPOINT SUM 2
..........INPUT 2          [445 ] =     0.00 %
..........INPUT 1          [443 ] =     0.00 %
..........INPUT 0          [444 ] =     0.00 %
..........RATIO 1          [446 ] =   1.0000
..........RATIO 0          [447 ] =   1.0000
..........DIVIDER 1        [466 ] =   1.0000
..........DIVIDER 0        [448 ] =   1.0000
..........LIMIT            [449 ] =   100.00 %
..........SPT SUM OUTPUT   [451 ] =     0.00 %
........PID
..........PROP. GAIN       [404 ] =      1.0
..........INT. TIME CONST. [402 ] =     5.00 SECS
..........DERIVATIVE TC    [401 ] =    0.000 SECS
..........POSITIVE LIMIT   [405 ] =   100.00 %
..........NEGATIVE LIMIT   [406 ] =  -100.00 %
..........O/P SCALER(TRIM) [407 ] =   0.2000
..........INPUT 1          [410 ] =     0.00 %
..........INPUT 2          [411 ] =     0.00 %
..........RATIO 1          [412 ] =   1.0000
..........RATIO 2          [413 ] =   1.0000
..........DIVIDER 1        [418 ] =   1.0000
..........DIVIDER 2        [414 ] =   1.0000
..........ENABLE           [408 ] = ENABLED
..........INT. DEFEAT      [409 ] = OFF
..........FILTER T.C.      [403 ] =    0.100 SECS
..........MODE             [473 ] =        0
..........MIN PROFILE GAIN [474 ] =    20.00 %
..........PROFILED GAIN    [475 ] =      0.0
........TENS+COMP CALC.
..........STATIC COMP      [487 ] =     0.00 %
..........DYNAMIC COMP     [488 ] =     0.00 %
..........REWIND           [489 ] = ENABLED
..........FIX.INERTIA COMP [479 ] =     0.00 %
..........VAR.INERTIA COMP [480 ] =     0.00 %
..........ROLL WIDTH/MASS  [481 ] =   100.00 %
..........LINE SPEED SPT   [498 ] =     0.00 %
..........FILTER T.C.      [482 ] =       10
..........RATE CAL         [483 ] =    10.00
..........NORMALISED dv/dt [484 ] =     0.00 %
..........INERTIA COMP O/P [485 ] =     0.00 %
..........TENSION SCALER   [486 ] =   1.0000
......FIELD CONTROL
........FIELD ENABLE     [170 ] = ENABLED
........FLD CTRL MODE IS [209 ] = CURRENT CONTROL *
........FLD VOLTAGE VARS
..........RATIO OUT/IN     [210 ] =     90.0 %
........FLD CURRENT VARS
..........SETPOINT         [171 ] =   100.00 %
..........PROP. GAIN       [173 ] =     0.10
..........INT. GAIN        [172 ] =     1.28
..........FLD WEAK VARS
............FLD. WEAK ENABLE [174 ] = DISABLED
............EMF LEAD         [175 ] =     2.00
............EMF LAG          [176 ] =    40.00
............EMF GAIN         [177 ] =     0.30
............MIN FLD CURRENT  [179 ] =    10.00 %
............MAX VOLTS        [178 ] =   100.00 %
............BEMF FBK LEAD    [191 ] =      100
............BEMF FBK LAG     [192 ] =      100
........FLD QUENCH DELAY [185 ] =      0.0 SECS
........FLD. QUENCH MODE [186 ] = QUENCH
......CURRENT PROFILE
........SPD BRK1 (LOW)   [32  ] =    100.0 %
........SPD BRK2 (HIGH)  [31  ] =    100.0 %
........IMAX BRK1(SPD1)  [93  ] =    200.0 %
........IMAX BRK2(SPD2)  [33  ] =    200.0 %
......INVERSE TIME
........AIMING POINT     [204 ] =   110.00 %
........DELAY            [199 ] =     10.0 SECS
........RATE             [200 ] =     60.0 SECS
......STOP RATES
........STOP TIME        [27  ] =     10.0 SECS
........STOP LIMIT       [217 ] =     60.0 SECS
........CONTACTOR DELAY  [302 ] =      1.0 SECS
........PROG STOP TIME   [26  ] =      0.1 SECS
........PROG STOP LIMIT  [216 ] =     60.0 SECS
........PROG STOP I LIM  [91  ] =   100.00 %
........STOP ZERO SPEED  [29  ] =     2.00 %
......CALIBRATION
........ARMATURE V CAL.  [20  ] =   1.0000
........IR COMPENSATION  [21  ] =     0.00 %
........ENCODER RPM      [22  ] =     1000 RPM
........ENCODER LINES    [24  ] =     1000
........ANALOG TACH CAL  [23  ] =   1.0000
........ZERO SPD. OFFSET [10  ] =     0.00 %
........ARMATURE I (A9)  [25  ] = BIPOLAR
........SPDFBK AIM LEVEL [180 ] =     50.0 %
........STALL THRESHOLD  [263 ] =    95.00 %
........STALL TRIP DELAY [224 ] =     10.0 SECS
........OVER SPEED LEVEL [188 ] =   125.00 %
........FIELD I CAL.     [182 ] =   1.0000
......INHIBIT ALARMS
........FIELD FAIL       [19  ] = ENABLED
........5703 RCV ERROR   [111 ] = ENABLED
........STALL TRIP       [28  ] = INHIBITED
........TRIP RESET       [305 ] = TRUE
........SPEED FBK ALARM  [81  ] = ENABLED
........ENCODER ALARM    [92  ] = ENABLED
......CURRENT LOOP
........CUR.LIMIT/SCALER [15  ] =   100.00 %
........MAIN CURR. LIMIT [421 ] =   200.00 %
........PROP. GAIN       [16  ] =    24.68        *
........INT. GAIN        [17  ] =     3.68        *
........AUTOTUNE         [18  ] = OFF
........FEED FORWARD     [136 ] =     9.22        *
........DISCONTINUOUS    [137 ] =    25.92 %      *
........ADDITIONAL DEM   [30  ] =     0.00 %
........BIPOLAR CLAMPS   [90  ] = DISABLED
........REGEN MODE       [201 ] = ENABLED
........POS. I CLAMP     [301 ] =     0.00 %      *
........NEG. I CLAMP     [48  ] =     0.00 %      *
........I DMD. ISOLATE   [119 ] = DISABLED
......SPEED LOOP
........PROP. GAIN       [14  ] =    10.00
........INT. TIME CONST. [13  ] =    0.500 SECS
........INT. DEFEAT      [202 ] = OFF
........ENCODER SIGN     [49  ] = NEGATIVE        *
........SPEED FBK SELECT [47  ] = ARM VOLTS FBK
........ADVANCED
```

```
..........ADAPTION
............MODE              [268 ] =        0
............SPD BRK1 (LOW)    [269 ] =     1.00 %
............SPD BRK2 (HIGH)   [270 ] =     5.00 %
............PROP. GAIN        [271 ] =     5.00
............INT. TIME CONST.  [272 ] =    0.500 SECS
..........I GAIN IN RAMP    [274 ] =   1.0000
..........POS. LOOP P GAIN [273 ] =     0.00 %
..........ZERO SPD. QUENCH
............ZERO SPD. LEVEL   [284 ] =     0.50 %
............ZERO IAD LEVEL    [285 ] =     1.50 %
........SETPOINTS
..........SETPOINT 1        [289 ] =     0.00 %
..........SIGN 2 (A3)       [9   ] = POSITIVE
..........RATIO 2 (A3)      [7   ] =   1.0000
..........SETPOINT 2 (A3)   [290 ] =     0.00 %
..........SETPOINT 3        [291 ] =     0.00 %
..........SETPOINT 4        [41  ] =     0.00 %
..........MAX DEMAND        [357 ] =   105.00 %
..........MIN DEMAND        [358 ] =  -105.00 %
......STANDSTILL
........STANDSTILL LOGIC [11  ] = DISABLED
........ZERO THRESHOLD    [12  ] =     2.00 %
........SOURCE TAG        [306 ] =       89
......SETPOINT SUM 1
........RATIO 1           [6   ] =   1.0000
........RATIO 0           [208 ] =   1.0000
........SIGN 1            [8   ] = POSITIVE
........SIGN 0            [292 ] = POSITIVE
........DIVIDER 1         [419 ] =   1.0000
........DIVIDER 0         [420 ] =   1.0000
........DEADBAND WIDTH    [131 ] =      0.0 %
........LIMIT             [375 ] =   105.00 %
........INPUT 2           [423 ] =     0.00 %
........INPUT 1           [100 ] =     0.00 %
........INPUT 0           [309 ] =     0.00 %
....PASSWORD
......ENTER PASSWORD    [120 ] =  0x0000
......CHANGE PASSWORD   [121 ] =  0x0000
....ALARM STATUS
......HEALTH WORD       [115 ] =  0x0210
......HEALTH STORE      [116 ] =  0x0000
....MENUS
......FULL MENUS        [37  ] = ENABLED
......MENU DELAY        [38  ] =       31        *
......LANGUAGE
....PARAMETER SAVE
....SERIAL LINKS
......MAIN PORT (P1)
........SRL LINK ENABLE   [146 ] = ENABLED
........GROUP ID (GID)    [138 ] =        0
........UNIT ID (UID)     [139 ] =        0
........PROTOCOL          [148 ] = EI ASCII
........BAUD RATE         [150 ] =     9600
........ESP SUP. (ASCII)  [152 ] = DISABLED
........CHANGEBAND (BIN)  [144 ] =     0.00 %
........ERROR REPORT      [158 ] =  0x00C0
........PNO. 7            [142 ] =  0xFFFF
........OPTION ADDRESS    [499 ] =        0
........OPTION VERSION    [303 ] =     0.00
........PARITY            [334 ] = EVEN
......AUX PORT (P2)
........SRL LINK ENABLE   [147 ] = ENABLED
........GROUP ID (GID)    [140 ] =        0
........UNIT ID (UID)     [141 ] =        0
........PROTOCOL          [149 ] = EI ASCII
........BAUD RATE         [151 ] =     9600
........ESP SUP. (ASCII)  [153 ] = DISABLED
........CHANGEBAND (BIN)  [145 ] =     0.00 %
........ERROR REPORT      [159 ] =  0x00C0
........PNO. 7            [143 ] =  0xFFFF
......SYSTEM PORT (P3)
........P3 SETUP
..........MODE            [130 ] = DISABLED
..........5703 SUPPORT
............SETPT. RATIO     [132 ] =   0.0000
............SETPT. SIGN      [133 ] = POSITIVE
............5703 INPUT       [187 ] =     0.00 %
............5703 OUTPUT      [189 ] =     0.00 %
..........BISYNCH SUPPORT
............GROUP ID (GID)   [329 ] =        0
............UNIT ID (UID)    [330 ] =        0
............ESP SUP. (ASCII) [328 ] = DISABLED
............CHANGEBAND (BIN) [331 ] =     0.00 %
............ERROR REPORT     [332 ] =  0x00C0
............PNO. 7           [333 ] =  0xFFFF
..........P3 BAUD RATE     [198 ] =     9600
........DUMP MMI -> P3
........UDP XFER <- P3
........UDP XFER -> P3
......PNO CONFIG
........PNO 112          [312 ] =      354        *
........PNO 113          [313 ] =       22        *
........PNO 114          [314 ] =      209        *
........PNO 115          [315 ] =       18        *
........PNO 116          [316 ] =      170        *
........PNO 117          [317 ] =       19        *
........PNO 118          [318 ] =      174        *
........PNO 119          [319 ] =       47        *
........PNO 120          [320 ] =      304        *
........PNO 121          [321 ] =       32        *
........PNO 122          [322 ] =       33        *
........PNO 123          [323 ] =       31        *
........PNO 124          [324 ] =       24        *
........PNO 125          [325 ] =       49        *
........PNO 126          [326 ] =      201        *
........PNO 127          [327 ] =      210        *
....SYSTEM
......SOFTWARE
......CONFIGURE I/O
........CONFIGURE ENABLE [39  ] = DISABLED
........ANALOG INPUTS
..........ANIN 1 (A2)
............CALIBRATION      [230 ] =   1.0000
............MAX VALUE        [231 ] =   100.00 %
............MIN VALUE        [232 ] =  -100.00 %
............DESTINATION TAG  [246 ] =      100
..........ANIN 2 (A3)
............CALIBRATION      [233 ] =   1.0000
............MAX VALUE        [234 ] =   100.00 %
............MIN VALUE        [235 ] =  -100.00 %
..........ANIN 3 (A4)
............CALIBRATION      [236 ] =   1.0000
............MAX VALUE        [237 ] =   100.00 %
............MIN VALUE        [238 ] =  -100.00 %
............DESTINATION TAG  [249 ] =        5
..........ANIN 4 (A5)
............CALIBRATION      [239 ] =   1.0000
............MAX VALUE        [240 ] =   100.00 %
............MIN VALUE        [241 ] =  -100.00 %
............DESTINATION TAG  [250 ] =       48
..........ANIN 5 (A6)
............CALIBRATION      [242 ] =   1.0000
............MAX VALUE        [243 ] =   100.00 %
............MIN VALUE        [244 ] =  -100.00 %
............DESTINATION TAG  [247 ] =      301
........ANALOG OUTPUTS
..........ANOUT 1 (A7)
............% TO GET 10V     [245 ] =   100.00 %
............MODULUS         [362 ] = FALSE
............OFFSET          [464 ] =     0.00 %
............SOURCE TAG      [251 ] =       62
..........ANOUT 2 (A8)
............% TO GET 10V     [248 ] =   100.00 %
............MODULUS         [363 ] = FALSE
............OFFSET          [465 ] =     0.00 %
............SOURCE TAG      [252 ] =       63
........DIGITAL INPUTS
..........DIGITAL INPUT C4
............DESTINATION TAG  [494 ] =      496
..........DIGITAL INPUT C5
............DESTINATION TAG  [495 ] =      497
..........DIGIN 1 (C6)
............VALUE FOR TRUE   [103 ] =     0.01 %
............VALUE FOR FALSE  [104 ] =     0.00 %
............DESTINATION TAG  [102 ] =       90
..........DIGIN 2 (C7)
............VALUE FOR TRUE   [106 ] =     0.01 %
............VALUE FOR FALSE  [107 ] =     0.00 %
............DESTINATION TAG  [105 ] =      118
..........DIGIN 3 (C8)
............VALUE FOR TRUE   [109 ] =     0.01 %
............VALUE FOR FALSE  [110 ] =     0.00 %
............DESTINATION TAG  [108 ] =      119
........DIGITAL OUTPUTS
..........DIGOUT 1 (B5)
............THRESHOLD (>)    [195 ] =     0.00 %
............MODULUS          [43  ] = TRUE
```

```
............SOURCE TAG        [97  ] =       77
............INVERTED          [359 ] = FALSE
..........DIGOUT 2 (B6)
............THRESHOLD (>)     [196 ] =     0.00 %
............MODULUS           [44  ] = TRUE
............SOURCE TAG        [98  ] =      122
............INVERTED          [360 ] = FALSE
..........DIGOUT 3 (B7)
............THRESHOLD (>)     [197 ] =     0.00 %
............MODULUS           [45  ] = TRUE
............SOURCE TAG        [99  ] =      125
............INVERTED          [361 ] = FALSE
........CONFIGURE 5703
..........SOURCE TAG        [134 ] =       89
..........DESTINATION TAG   [135 ] =       41
........BLOCK DIAGRAM
..........RAISE/LOWER DEST [260 ] =        0
..........RAMP O/P DEST    [293 ] =      291
..........SPT SUM 1 DEST   [294 ] =      289
..........PID O/P DEST     [400 ] =        0
..........DIAMETER         [431 ] =        0
..........TAPER            [442 ] =        0
..........SETPOINT SUM 2   [450 ] =        0
..........POS. I CLAMP     [435 ] =        0
..........NEG. I CLAMP     [436 ] =        0
..........TENS+COMP CALC.  [478 ] =        0
........INTERNAL LINKS
..........LINK 1
............SOURCE TAG        [364 ] =        0
............DESTINATION TAG   [365 ] =        0
..........LINK 2
............SOURCE TAG        [366 ] =        0
............DESTINATION TAG   [367 ] =        0
..........LINK 3
............SOURCE TAG        [368 ] =        0
............DESTINATION TAG   [369 ] =        0
..........LINK 4
............SOURCE TAG        [370 ] =        0
............DESTINATION TAG   [371 ] =        0
..........LINK 5
............SOURCE TAG        [454 ] =        0
............DESTINATION TAG   [455 ] =        0
..........LINK 6
............SOURCE TAG        [456 ] =        0
............DESTINATION TAG   [457 ] =        0
..........LINK 7
............SOURCE TAG        [458 ] =        0
............DESTINATION TAG   [459 ] =        0
..........LINK 8
............SOURCE TAG        [460 ] =        0
............DESTINATION TAG   [461 ] =        0
..........LINK 9
............SOURCE TAG        [467 ] =        0
............DESTINATION TAG   [468 ] =        0
..........LINK 10
............SOURCE TAG        [469 ] =        0
............DESTINATION TAG   [470 ] =        0
..........LINK 11
............SOURCE TAG        [390 ] =        0
............DESTINATION TAG   [391 ] =        0
............ADVANCED         [392 ] = OFF
............MODE             [393 ] = SWITCH
............AUX.SOURCE       [394 ] =        0
..........LINK 12
............SOURCE TAG        [395 ] =        0
............DESTINATION TAG   [396 ] =        0
............ADVANCED         [397 ] = OFF
............MODE             [398 ] = SWITCH
............AUX.SOURCE       [399 ] =        0
```

```
......RESERVED
........FACTORY USE ONLY
..........DO NOT ALTER !!
............MIN MMI CYCLE TM [162 ] =       80
............ILOOP PI MODE    [163 ] =        2
............TOGGLE PERIOD    [164 ] =      160
............TOGGLE REF 1     [165 ] =     0.00 %
............SEL. INT/CUR/SPD [166 ] =        2
............TOGGLE REF 2     [167 ] =     0.00 %
............PEAK HW SLOPE    [190 ] =      163
............PEAK HW OFFSET   [226 ] =      195
............HEALTH INHIBIT   [211 ] =  0x0000
............DISC ADAPT POT   [194 ] =     2341
............TICK LENGTH      [193 ] =     3840
............AUTOCAL          [310 ] = ENABLED
............IAINST OFFSET    [311 ] =   1        *
............ZERO CUR OFFSET  [213 ] =   1        *
............ZCD THRESHOLD    [214 ] =        6
............12 BIT DAC       [220 ] = DISABLED
............MMI FILTER T.C.  [221 ] =       80
............PRED STEP        [222 ] =        3
............SCAN THRESHOLD   [223 ] =        4
............FIELD FBKSTOP    [34  ] =      155
............FIELD FFRSTOP    [35  ] =      209
............IFFB DELAY       [36  ] =       20
............II              [154 ] =  0x5900
............PRECSN/RESTR CHK [229 ] =        2
............MIN BS DEAD TIME [101 ] =        1
............PLL PROP         [276 ] =       80
............PLL INT          [277 ] =       32
............FILTER T.C.      [386 ] =       20
............ARM ENDSTOP      [279 ] =    12200
............SCAN TC          [283 ] =       10
............HF C/O DISC GAIN [280 ] =     1800
............HF C/O FILTER TC [281 ] =        3
............BEMF THRESHOLD   [282 ] =        4
............ANALOG IP OFFSET [265 ] =        2
............SYNC OFFSET      [388 ] =        0
............dI/dt            [205 ] =    35.00 %
............DISABLE MEAN FBK [335 ] = FALSE
............CHANGEOVER BIAS  [336 ] =  0x4780
............STANDBY FIELD    [471 ] =    50.00 %
............3-PHASE FIELD    [476 ] = DISABLED
......PEEK
........PEEK DATA        [123 ] = [0x0078] = 0000
........PEEK SCALE       [124 ] =     8.00
......miniLINK
........VALUE 1          [339 ] =     0.00 %
........VALUE 2          [340 ] =     0.00 %
........VALUE 3          [341 ] =     0.00 %
........VALUE 4          [342 ] =     0.00 %
........VALUE 5          [343 ] =     0.00 %
........VALUE 6          [344 ] =     0.00 %
........VALUE 7          [345 ] =     0.00 %
........VALUE 8          [379 ] =     0.00 %
........VALUE 9          [380 ] =     0.00 %
........VALUE 10         [381 ] =     0.00 %
........VALUE 11         [382 ] =     0.00 %
........VALUE 12         [383 ] =     0.00 %
........VALUE 13         [384 ] =     0.00 %
........VALUE 14         [385 ] =     0.00 %
........LOGIC 1          [346 ] = OFF
........LOGIC 2          [347 ] = OFF
........LOGIC 3          [348 ] = OFF
........LOGIC 4          [349 ] = OFF
........LOGIC 5          [350 ] = OFF
........LOGIC 6          [351 ] = OFF
........LOGIC 7          [352 ] = OFF
........LOGIC 8          [353 ] = OFF
```

5703 Support

This unit provides the facility to run a line of converters in speed-lock without the use of a 5720 Quadraloc controller; for accurate speed-holding, encoder feedback is required. Ratioed speed-locking is supported, although the unit is not intended to replace the Quadraloc in applications requiring high accuracy.

A 16-bit speed signal is passed between drives through a fibre-optic link and the P3 port on each Converter (a port otherwise used only off-line for the upload and download of EEPROM data). The port operates RS232 compatible signal levels, the 5703/1 converts these signal levels to fibre optic signals for transmission and from fibre optics to RS232 for reception.

Hardware Description

The 5703/1 is housed in a DIN rail mounted box and is provided with a ribbon cable to connect into the P3 port. The ribbon cable is 400 mm long to limit transmission errors, the primary unit - to-unit interconnection is intended to be achieved by a fibre optic cable.

The 5703 unit itself is simply an electric signal-to-light converter and does not alter the signal in any way, this is achieved within the software data of the Converter.

It is fitted with one fibre optic receiver and two fibre optic transmitters, the fibre optic receiver has a fixed function to receive data from the preceding unit while the transmitter sends data to the following unit. The additional transmitter can be used either to re-transmit the incoming signal or provide a second transmission of the output signal, this gives the unit wide functionality. When the link is in the normal right hand position, assuming the board is mounted with the fibre optics downward, the second transmitter repeats the output signal. In the left hand position it repeats the input signal.

The 5703/1 can be configured to point to any relevant parameter in the block diagram, the default connections are such that the scaled input is connected to the "additional speed demand" and the output to the "speed demand".

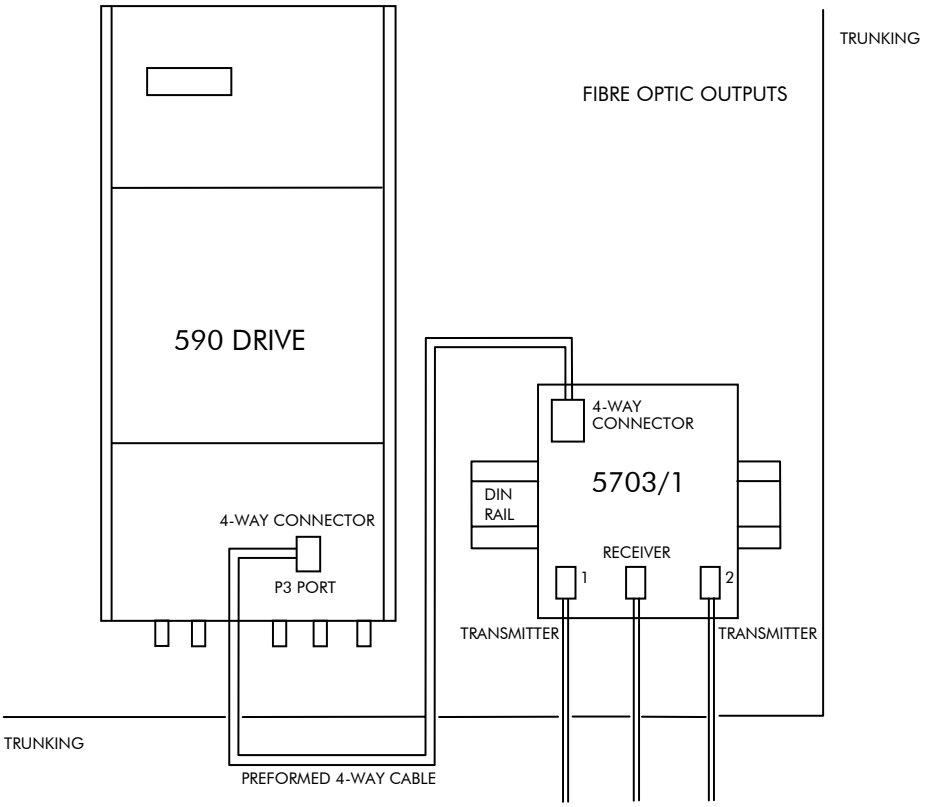

Figure 14-1 5703/1 Product Outline Drawing

Commissioning the 5703/1

The P3 port is configured for 5703 support using the MMI. The Converter's RS422 serial link will then allow control over the scaling of the input by an operator station or by a host processor. Refer to Chapter 15: "The Default Application" for the block diagram, and also see Figure 14-2 Wiring Diagram for 5703/1 Speed Repeater below.

Refer to Chapter 6: "Programming Your Application" - 5703 SUPPORT for parameter details.

MMI Menu Map

1 SERIAL LINKS
2 SYSTEM PORT P3
3 P3 SETUP
4 5703 SUPPORT
- SETPT. RATIO
- SETPT. SIGN
- 5703 INPUT
- 5703 OUTPUT

The Inputs of the Drive

The speed setpoint from the 5703/1 enters the drive via the P3 port and, after scaling, is added together with analog inputs 1, 2 and 3 (ramped).

IN BASIC TACHO-FOLLOWER MODE, ALL THE ANALOG INPUTS MUST BE DISABLED TO PREVENT LOSS OF ACCURACY, yet it may be necessary in some applications to provide analog inputs for trim signals or inch setpoints:

1. The ramp input may be disabled by taking terminal C7 (Ramp Hold) permanently high; the ramp is automatically cleared when the drive is quenched, and its output will never move from (exactly) zero. The ramp input may often be of use in line master drives; but the ramp should be disabled in slave drives. Note that the P3 setpoint may be passed through the ramp function; in such a case, the analog input to the ramp (terminal A4) is automatically disconnected.
2. Analog input 1 (terminal A2) is used for inch setpoints. During normal running, the terminal is shorted to 0V and the deadband function is used so that no signal at all passes to the summing junction. The analog inch setpoints are set a little above the threshold of the deadband so as to give the required inching speeds, forward or backward. Selection between analog inching and absolutely zero analog input is thus accomplished automatically.
3. Analog input 2 (terminal A3) may be disabled by writing zero to its scaling block; this will normally be done through the MMI at commissioning, but may be overridden by the serial link. Alternatively, this input may be used for a local analog trim.

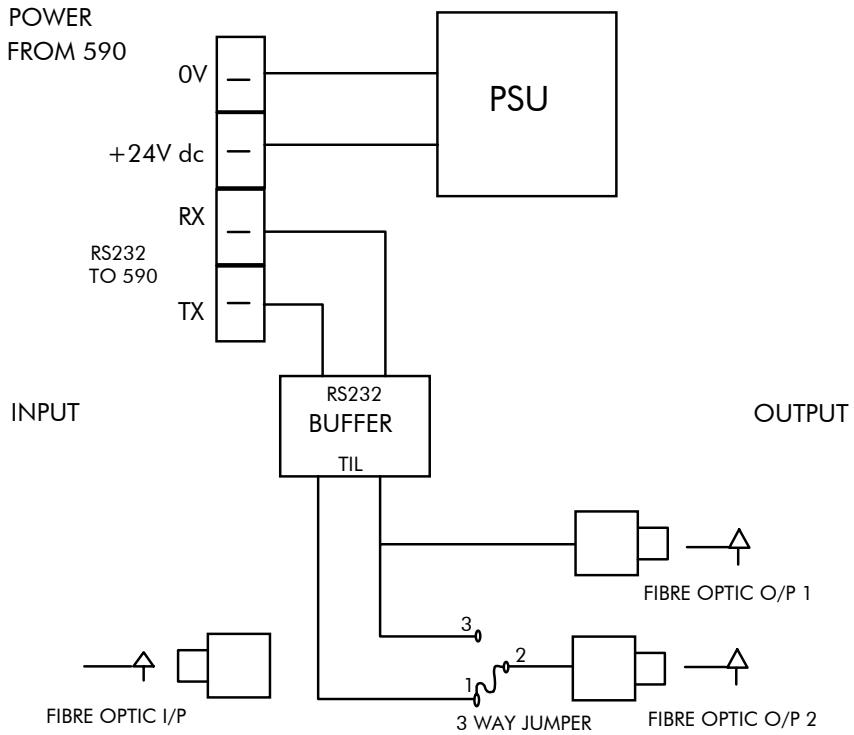

Figure 14-2 Wiring Diagram for 5703/1 Speed Repeater

Error Codes

ERROR REPORT (EE)

The EI-BISYNCH Prime Set contains the EE mnemonic. This is also an output parameter in the MAIN PORT (P1), AUX PORT (P2) and SYSTEM PORT (P3) function blocks, where the parameter value can be read and reset. Refer to the COMMS Option Technical Manual for further details.

The following values are returned if an enquiry (reading information from the Converter) is performed on this Read/Write parameter.

Writing any value to this parameter will set the value to >00C0. Clearing the last error value may be useful in seeing a repetitive error re-occurring.

Value	Description
>00C0	No error
>01C7	Invalid mnemonic
>02C2	Checksum (BCC) error
>03C2	Framing or overrun error
>04C8	Attempt to read from a write-only parameter
>05C8	Attempt to write to a read-only parameter
>07C7	Invalid message format
>07C8	Invalid data (encoding error)
>08C8	Data out of range

THE DEFAULT APPLICATION

Block Diagrams

The Converter is supplied with a pre-programmed set of parameters providing for basic speed control. The following block diagrams show this factory set-up.

If you make any permanent changes to the block diagram, remember to update the non-volatile memory within the Converter by performing a PARAMETER SAVE. Refer to Chapter 5: “The Man-Machine Interface (MMI)” - Saving Your Application.

To return to the default application, refer to Chapter 5: “The Man-Machine Interface (MMI)” - Special Key Combinations.

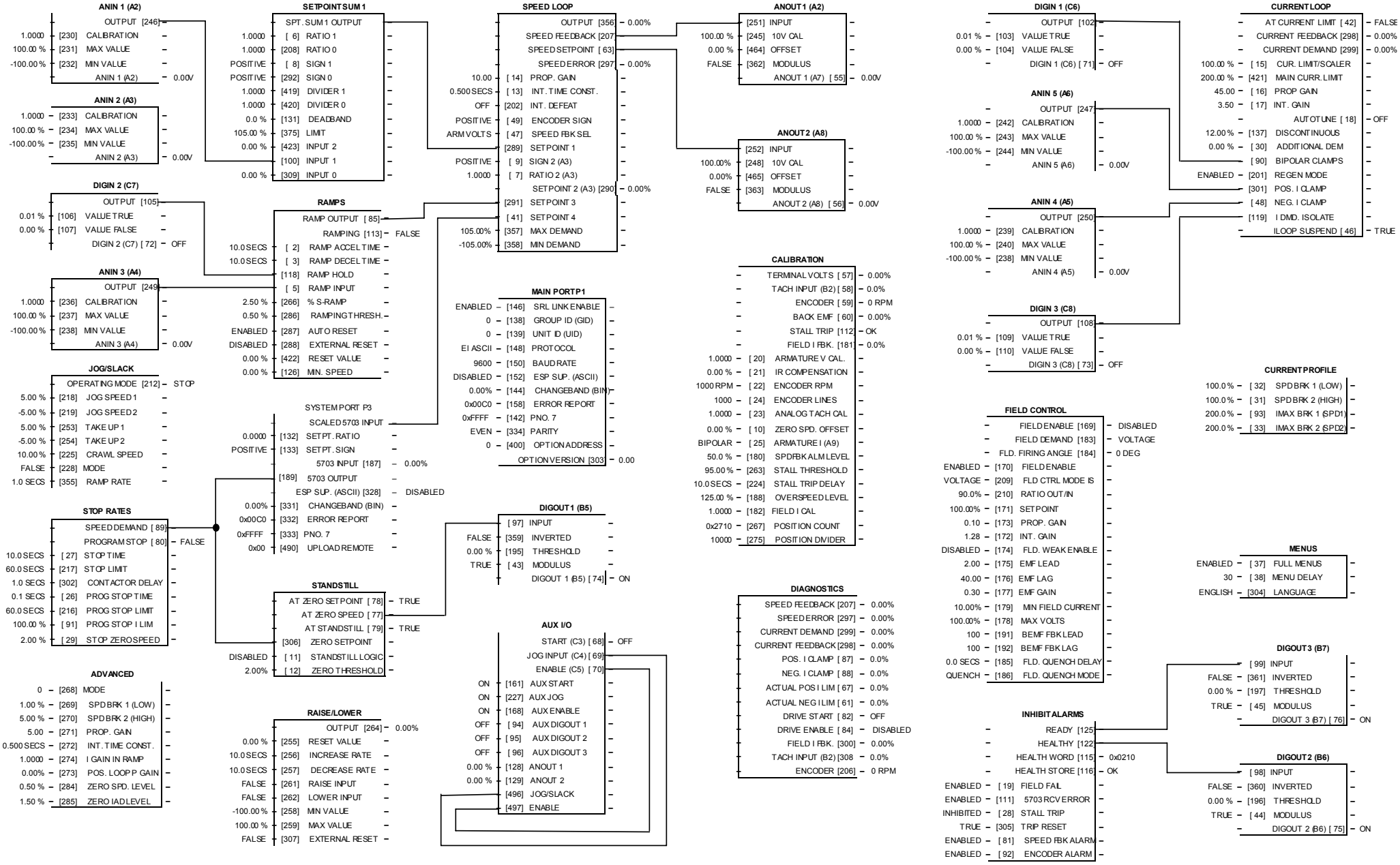

Programming Block Diagram - Sheet 1

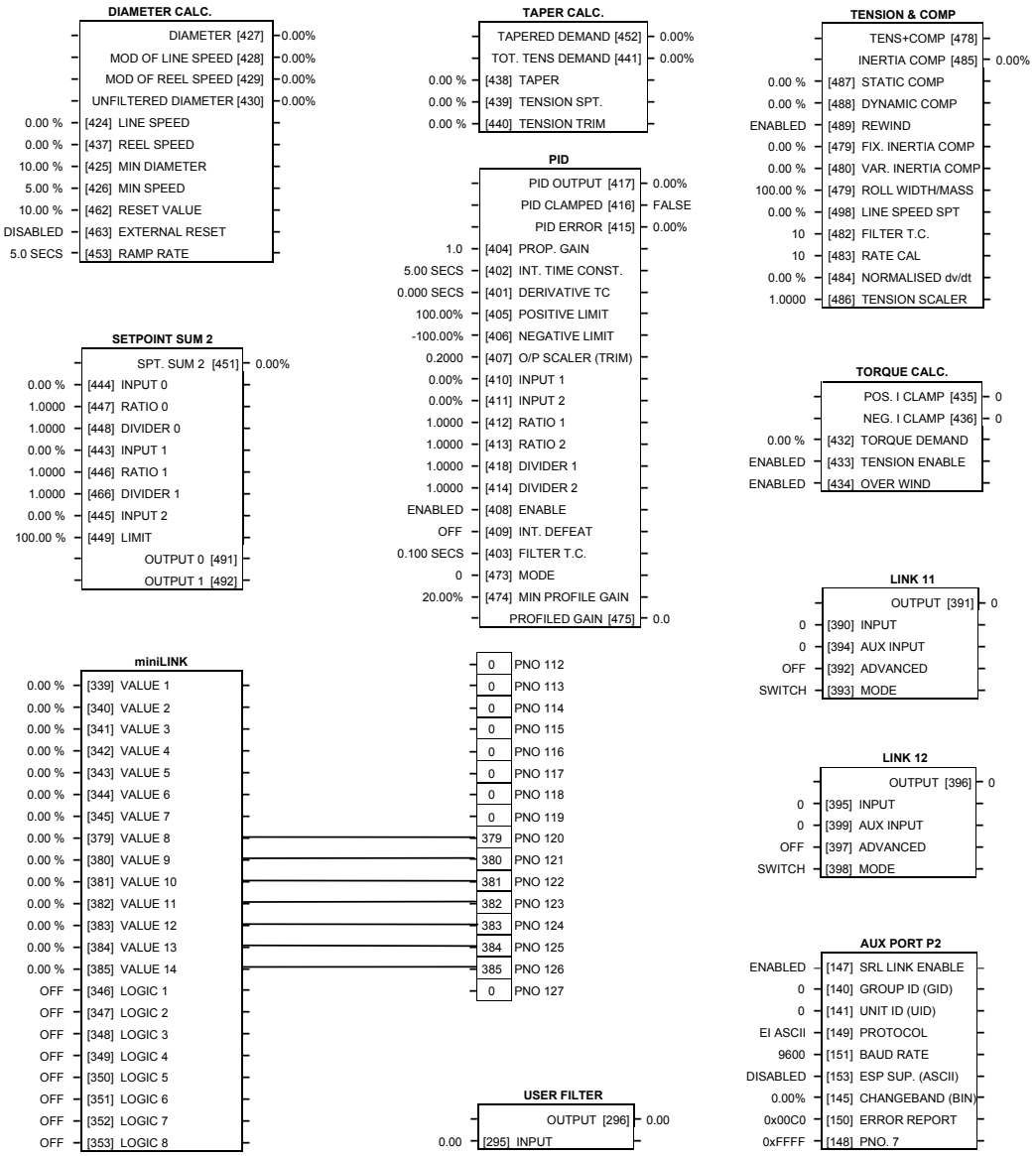

Programming Block Diagram - Sheet 2

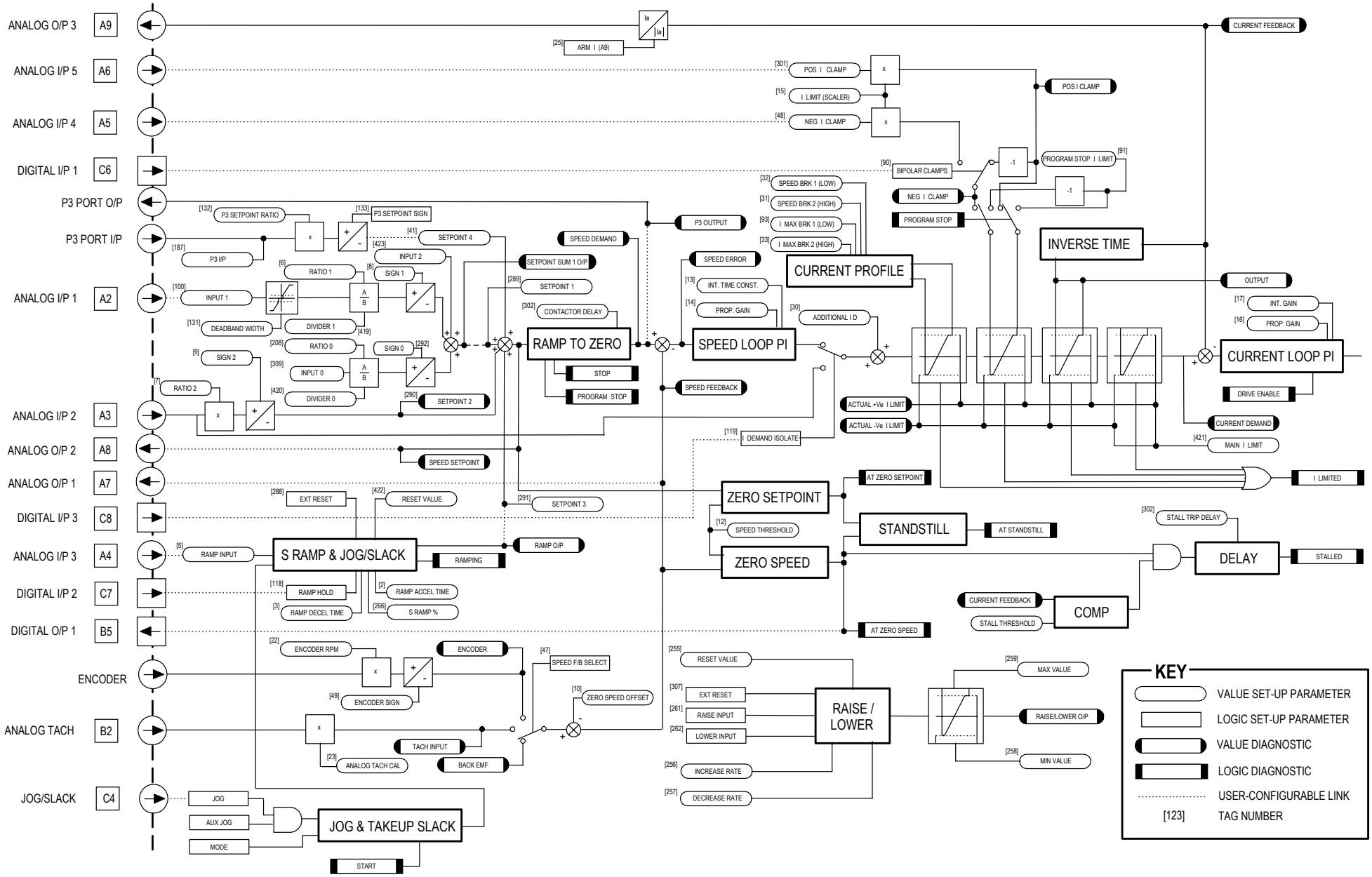

Main Block Diagram

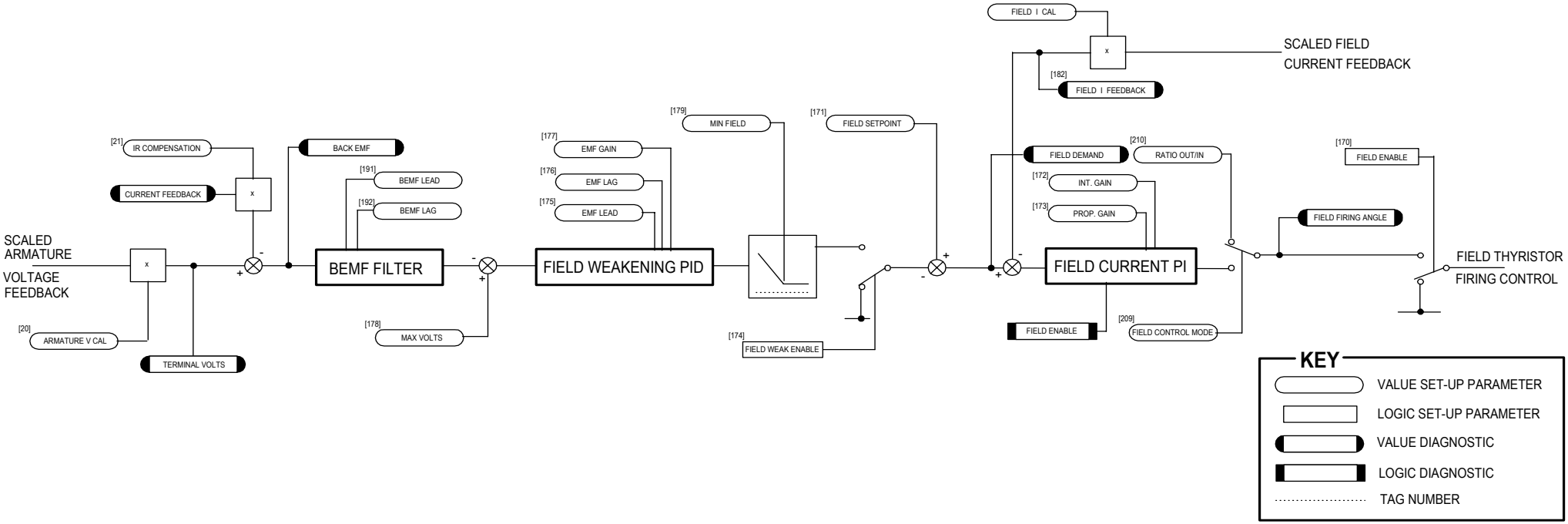

Field Control Block Diagram

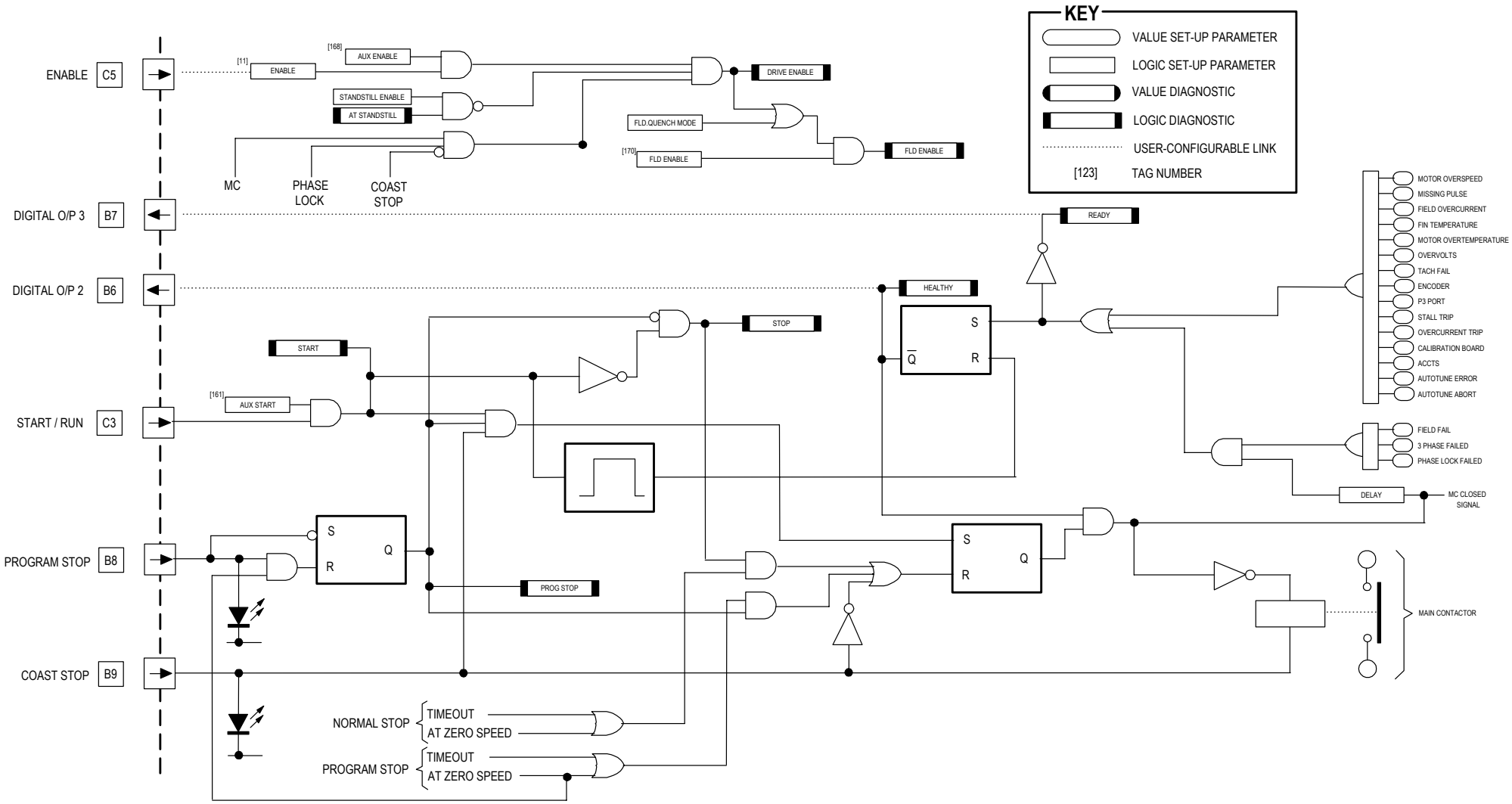

Start/Healthy Logic Block Diagram

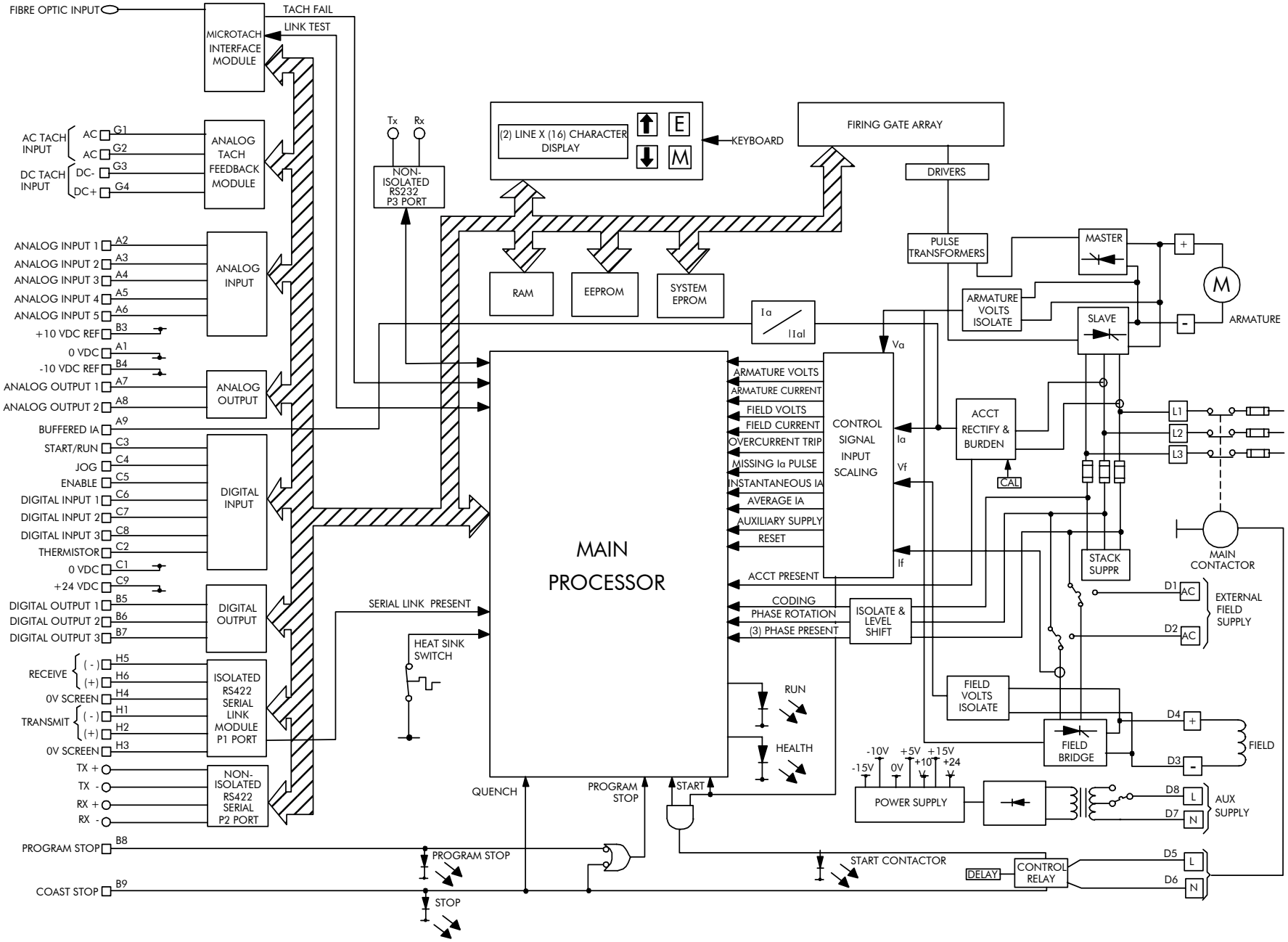

Functional Block Diagram

ISS.	MODIFICATION	ECN No.	DATE	DRAWN	CHK'D
1	Initial Issue (HA467078) of re-formatted manual including ECN12620, ECN12912, ECN11945	13329	1/2/99	CM	GDR
2	Corrected to show new Microtach Encoder connections and External Motor Field Connections for power board AH385621	13544	13/5/99	CM	GDR
3	3-12 Corrected +24V ac to +24V dc 3-15 External Motor Field Connections : Wire colours are the wrong way round in the diagram. The wire going to F8 should be yellow. The wire going to F16 should be red. 7-3 OVERVOLTS(VA) add the words "Loose armature connection" to the top of this list. 8-1 Added Disposal information. 11-1 Added Vibration information 11-8 Terminal Information (Power Board) : Field Output F+ should be D4, Field Output F- should be D3. 12-12 New Certificate removed pages 12-13, 12-14, 12-15, and 12-16.	15028 (13908)	07.04.00	FEP	CM
4	Change of company name and logo to SSD Drives Ltd.	18354	4/11/04	CM	GDR
5	Page 4-3 correctly printed	18606	18/02/05	CM	GDR
6	Safety note about clamping during Autotune New filter part number and drawing Product code for PROFIBUS updated	18826 (16912) (17653)	14/09/05	CM	GDR
7	Parker name change. Other small amendments.	16843 (16753) (S11563)	01/02/07	CM	GDR

FIRST USED ON	MODIFICATION RECORD 590 Series DC Digital Converter	
Parker SSD DRIVES	DRAWING NUMBER ZZ467078	SHT. 1 OF 1