REV	AA	AB	AC	BA	BB	BC	CA	BD	BC	BB	BA	AC	AB	AA	SH
REV STATUS	OA	NG	NF	NE	ND	NC	NB	NA	MA	KB	KA	JB	JA	HH	HG

REV	AH	AI	AJ	AK	AL	AM	AN	AO	AP	AQ	AR	AS	AT	AU	AV
REV STATUS	HF	HE	HD	HC	HB	HA	GB	GA	FG	FF	FE	FD	FC	FB	FA

REV	AW	AX	AY	AZ	BA	BB	BC	BD	CA	CB	CC	CD	CE	CF	CG
REV STATUS	AA	AB	AC	AD	AE	AF	AG	AH	AI	AJ	AK	AL	AM	AN	AO

REVISIONS

REV	ECR	DESCRIPTION	ZONE	DWN	CHK	APPD	MM/DD/YY
A		CONFIGURATION RELEASE		DLC	TI	TI	2/20/04
B	9360	UPDATED WELD TABLE		DLC	PR	TI	4/7/04
C	9608	CHG Y MOTOR ON XYZ TABLE		DLC	DG	TI	10/11/04

DRAWING INDEX:

CFI SOLID STATE WELDER

PAGE	DESCRIPTION	SHEET
01	DRAWING INDEX & WIRE IDENTIFICATION.	AA
02	SYSTEM INTERCONNECT.	AB
03	SYSTEM GROUNDING.	AC
04	AC POWER DISTRIBUTION.	BA
05	AC POWER DISTRIBUTION (FEEDBACK BOARDS).	BB
06	AC POWER DISTRIBUTION (DC RECTIFIERS). . . .	BC
07	AC HARMONIC FILTER.	CA
08	AUXILLARY AC POWER DISTRIBUTION.	FA
09	THREE PHASE AC MOTORS	FB
10	THREE PHASE AC MOTORS	FC
11	SINGLE PHASE AC MOTORS.	FD
12	AC TABLE CONTROLS	FE
13	DC CONTROLS	GA
14	DC CONTROLS	GB
15	DC CONTROLS	GC
16	PLC LAYOUT.	HA
17	PLC POWER SUPPLY & CPU (SLOT 0)	HB
18	PLC ANALOG INPUTS (SLOT 1).	HC
19	PLC DIGITAL INPUTS (SLOT 2).	HD
20	PLC DIGITAL INPUTS (SLOT 3).	HE
21	PLC DIGITAL INPUTS (SLOT 4).	HF
22	PLC DIGITAL OUTPUTS (SLOT 5).	HG
23	PLC DIGITAL OUTPUTS (SLOT 6).	HH
24	PLC DIGITAL INPUTS (SLOT 7).	HI
25	1–DC1 & 1–DC2 CONTROL BOARDS	JA
26	1–SPC1 SPEED POWER CONTROL BOARD	JB
27	1–XLOC TERM. BLOCK.	KA
28	1–XHF TERM. BLOCK	KB
29	MILL INTERLOCKS	MA
30	HF OUTPUT CIRCUIT.	NA
31	HF GENERATOR AC CONTROLS.	NB
32	HF GENERATOR AC CONTROLS.	NC
33	HF GENERATOR INTERLOCKS	ND
34	2–HF1 CONTROL BOARD	NE
35	HF MODULE POWER SUPPLIES.	NF
36	HF MODULES POWER SUPPLIES.	NG
37	2–HF1 BOARD TO HF MODULE CONNECTIONS. . . .	NH

WIRE IDENTIFICATION:

	FIRST NUMBER USED	LAST NUMBER USED
3 PHASE AC (460/230)		
A / U – BLACK (BLK) / BROWN (BRN)	L1	11L1
B / V – BLACK (BLK) / ORANGE (ORG)	L2	11L2
C / W – BLACK (BLK) / YELLOW (YEL)	L3	11L3
1 PHASE AC (220)		
220 VAC H – RED	102A	142
220 VAC L – WHITE (WHT)	100	–
CONTROL VOLTAGE AC (115)		
115 VAC H – RED (RED)	101	117
115 VAC L – WHITE (WHT)	100	–
ISOLATED CONTROL VOLTAGE		
115 VAC H – RED (RED)	601	620
115 VAC L – WHITE (WHT)	600	–
AUXILIARY VOLTAGE		
115 VAC H – YELLOW (YEL)	801	–
115 VAC L – YELLOW (YEL)	800	–
HIGH VOLTAGE DC		
(+/–) – BLACK	901	907
(COM) – BLACK	900	
CONTROL VOLTAGE DC		
+24VDC – BLUE (BLU)	2401	24133
–24VDC – WHITE/BLACK/BLUE (WHT/BLK/BLU)	–	–
COM – GRAY (GRY)	2400	–
LOW VOLTAGE DC (6–23VDC)		
+VDC – GRAY (GRY)	1001	1093
–VDC – VIOLET (VIO)	1002	–
COM – PINK (PNK)	1000	–
TTL SIGNAL WIRES		
+5VDC – BROWN (BRN)	5001	–
–5VDC – WHITE/GRAY (WHT/GRY)	5002	–
COM – WHITE/BROWN (WHT/BRN)	5000	–

GROUND WIRES – GREEN/YELLOW (GRN/YEL)

NOTE:
NUMBERS SHOWN ARE RESERVED FOR SUPPLY WIRES.
SEQUENCE CONTINUES FOR SIGNAL WIRES.
EX. 24VDC SIGNAL = 2403

PLC ADDRESS IS USED FOR WIRE NUMBER WHEN EVER POSIBLE.

EX. SLOT 1, GROUP 0, BIT 15 = 01015

NEXT ASSY | JOB NO
FIRST APPLICATION
UNIT CFI

BUYER OR SELLER HEREBY ACKNOWLEDGES THAT THERE MAY BE ERRORS OR OMISSIONS IN THIS DOCUMENT AND THAT THERMATOOL CORP SHALL NOT BE LIABLE IN ANY MANNER FOR SUCH ERRORS OR OMISSIONS.

©Copyright 1996 THERMATOOL CORP.

THIS DOCUMENT IS THE PROPERTY OF THERMATOOL CORP AND IT IS SUBMITTED FOR USE ONLY WITH WORK PROPOSED OR AUTHORIZED BY THIS COMPANY. IT SHOULD NOT BE USED OR DUPLICATED FOR ANY OTHER PURPOSE AND IS TO BE RETURNED TO THERMATOOL CORP ON REQUEST WHEN NO LONGER REQUIRED FOR SUCH PURPOSES.

UNLESS OTHERWISE SPECIFIED DIMENSIONS ARE IN MILLIMETERS
TOLERANCES ON
0 PLACE (X) ± 0.5 ANGLE ± 0°30'
1 PLACE (X.X) ± 0.3 SURFACE FINISH N8
2 PLACE (X.XX) ± 0.15
BREAK AND DEBURR ALL SHARP EDGES

SI–METRIC

THIRD ANGLE PROJECTION

APPROVALS		MM/DD/YY
DWN	T. IGNATOWSKI	3/10/98
CHK	WDS	12/30/97
ENG/APPD	ABR	3/10/98
MATL		
FINISH/HEAT TREAT		

THERMATOOL®

TITLE
SCHEMATIC – ELECTRICAL
CFD SOLID STATE WELDER
HF24

SIZE	DIV NO	DWG NO	REV
A1	1	WW5128S	A

SCALE NONE | DO NOT SCALE DRAWING COPY | SHEET AA

ENG–REF:

SYSTEM INTERCONNECT

(USE FOR REFERENCE ONLY)

NOTES:

1. THIS DRAWING SHOWS HOW THE THERMATOOL EQUIPMENT IS ELECTRICALLY INTERCONNECTED. THE LOCATION OF CONDUITS SHOWN ARE INTENDED TO BE USED AS A GUIDE. CONDUITS ARE SHOWN THIS WAY TO CLEARLY DEMONSTRATE HOW THEY INTERCONNECT. THE ACTUAL INSTALLATION AND RUNNING OF CONDUIT IS THE OPTION OF THE CUSTOMER.

2. RUN SEPARATE CONDUIT FOR EACH WIRING LEVEL.

3. WIRING VOLTAGE LEVEL, LEVEL NUMBERS
   - ① . . .LOW LEVEL (ANALOG)
   - ② . . .MEDIUM LEVEL (24VDC)
   - ③ . . .HIGH LEVEL (115/230VAC)
   - ④ . . .POWER LEVEL (380/420/460/575VAC)
   - ⑤ . . .SPECIAL HIGH POWER CABLES
   - ⑥ . . .PLANT DISTRIBUTION

4. XX-XX-XX CONDUIT NUMBER XX - XX - XX
   - FROM EQUIPMENT PREFIX
   - TO EQUIPMENT PREFIX
   - WIRING VOLTAGE LEVEL
   - JUNCTON BOX NUMBER

5. ALL CONDUIT AND WIRING TO BE PROVIDED AND INSTALLED BY CUSTOMER, UNLES OTHERWISE NOTED.

6. ALL WIRING TO BE IN ACCORDANCE WITH THE NATIONAL ELECTRICAL CODE AND/OR ALL APPLICABLE CODES.

7. FOR WIRE DETIALS REFER TO ELECTRICAL INSTALLATION DWG AND INTERCONNECT CABLE LIST.

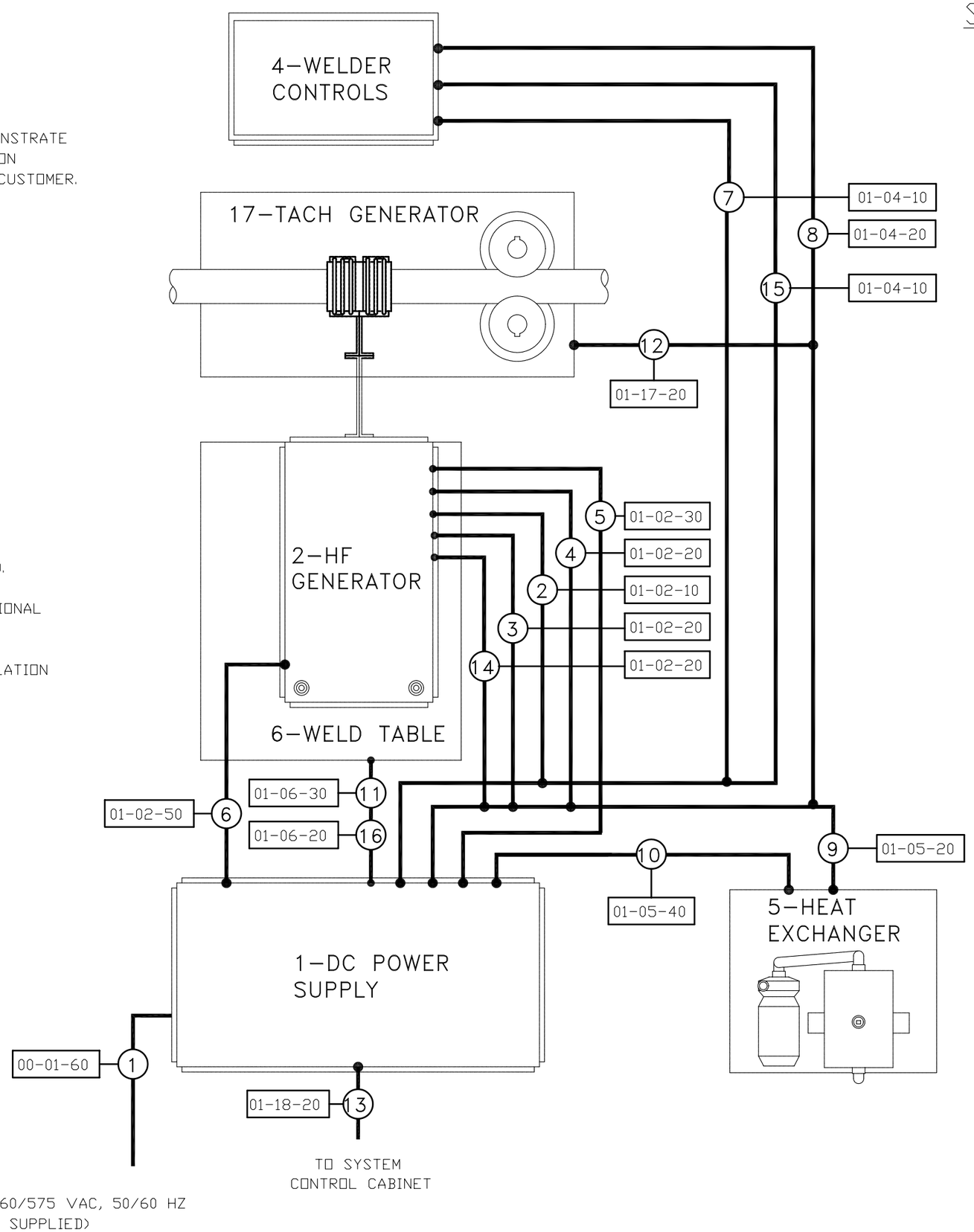

THERMATOOL®	SIZE	DIV NO	DWG NO	REV
	A2	1	WW5128	A
	SCALE 1:1	DO NOT SCALE DRAWING COPY	SHEET	AB

ENG-REF:

SYSTEM GROUNDING

(USE FOR REFERENCE ONLY)

SYSTEM GROUNDING

NOTES:

1. ALL GROUND CABLES ARE 10 AWG [6MM2] GRN/YEL UNLESS OTHERWISE SPECIFIED.
2. RUN GROUNDING CABLES FROM THE TWO GROUND STUDS ON THE FRONT SIDE OF THE CABINET TO (4) INDIVIDUAL LOCATIONS ON THE MILL BASE. KEEP WIRES AS SHORT AS POSSIBLE AND EQUAL IN SPACING AND DISTANCE. MINIMUM SPACING ON MILL FIXTURE IS 12 INCHS [305MM2].
3. COPPER BONDED GROUND ROD -- ø1/2IN X 10FT. MINIMUM MUST HAVE A TOTAL RESISTANCE TO GROUND OF 25 OHMS OR LESS

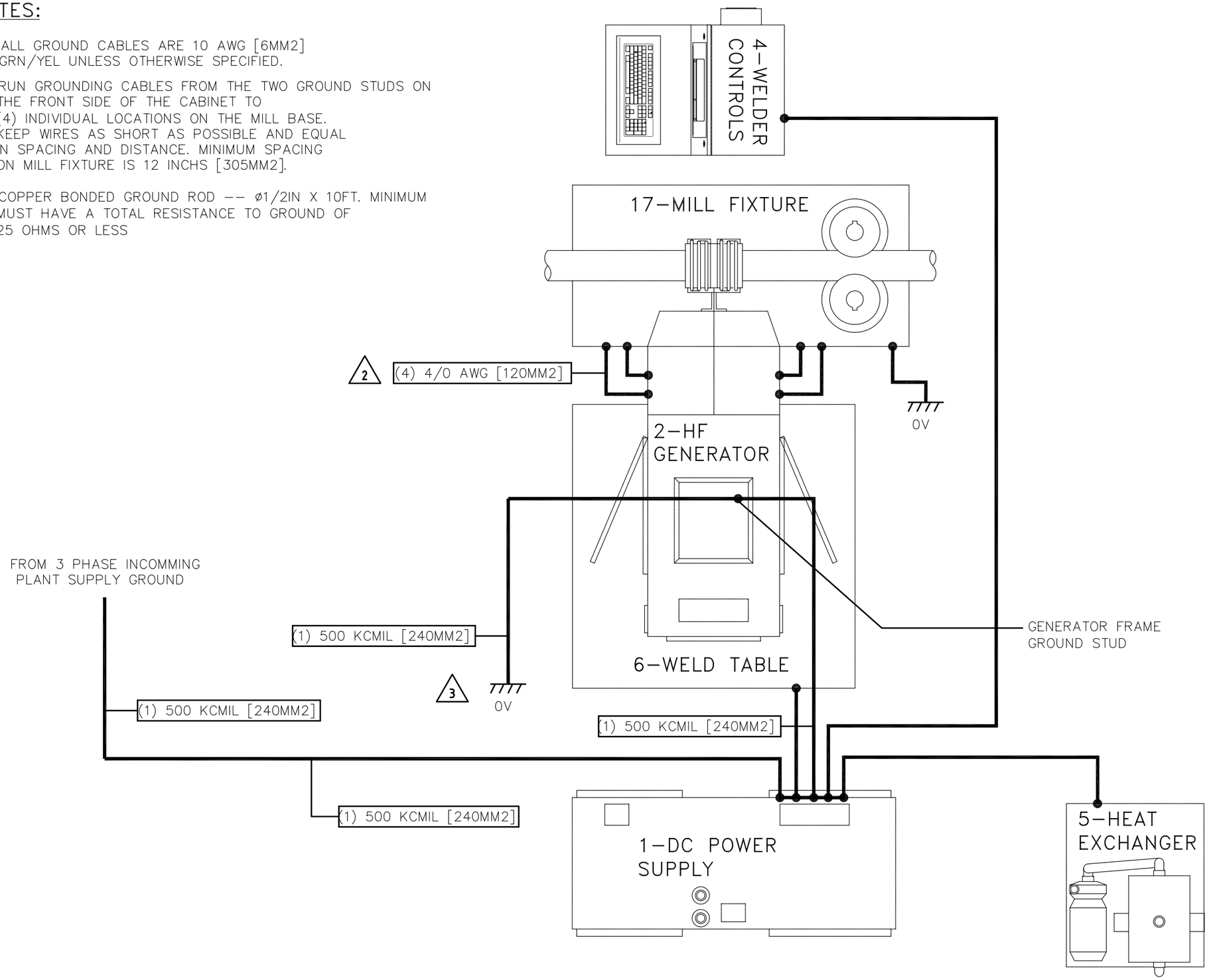

THERMATOOL®	SIZE	DIV NO	DWG NO	REV
	A2	1	WW5128	A
	SCALE	1:1	DO NOT SCALE DRAWING COPY	SHEET AC

ENG-REF:

AC POWER DISTRIBUTION

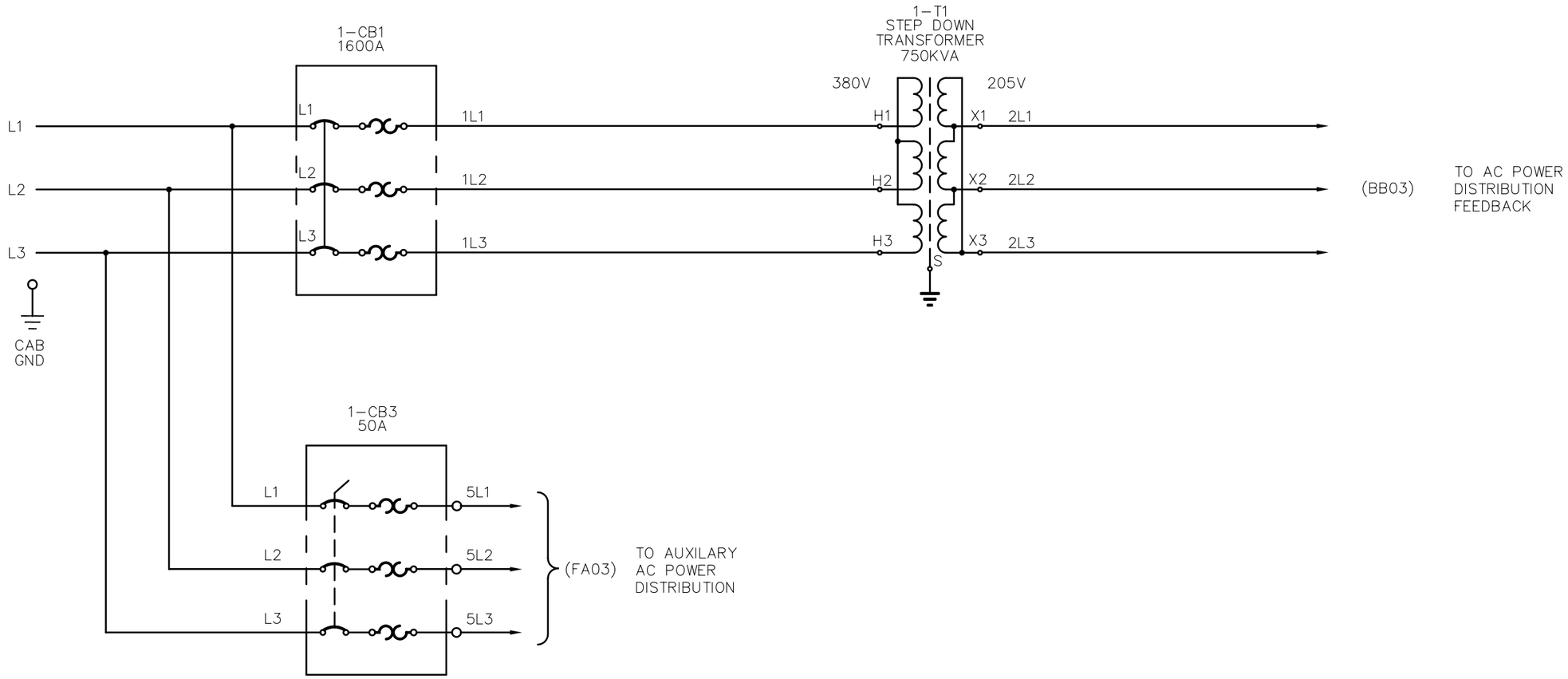

THERMATOOL®

SIZE	DIV NO	DWG NO	REV
A1	1	WW5128S	A
SCALE NONE	DO NOT SCALE DRAWING COPY	SHEET	BA

ENG-REF:

AC POWER DISTRIBUTION FEEDBACK BOARDS

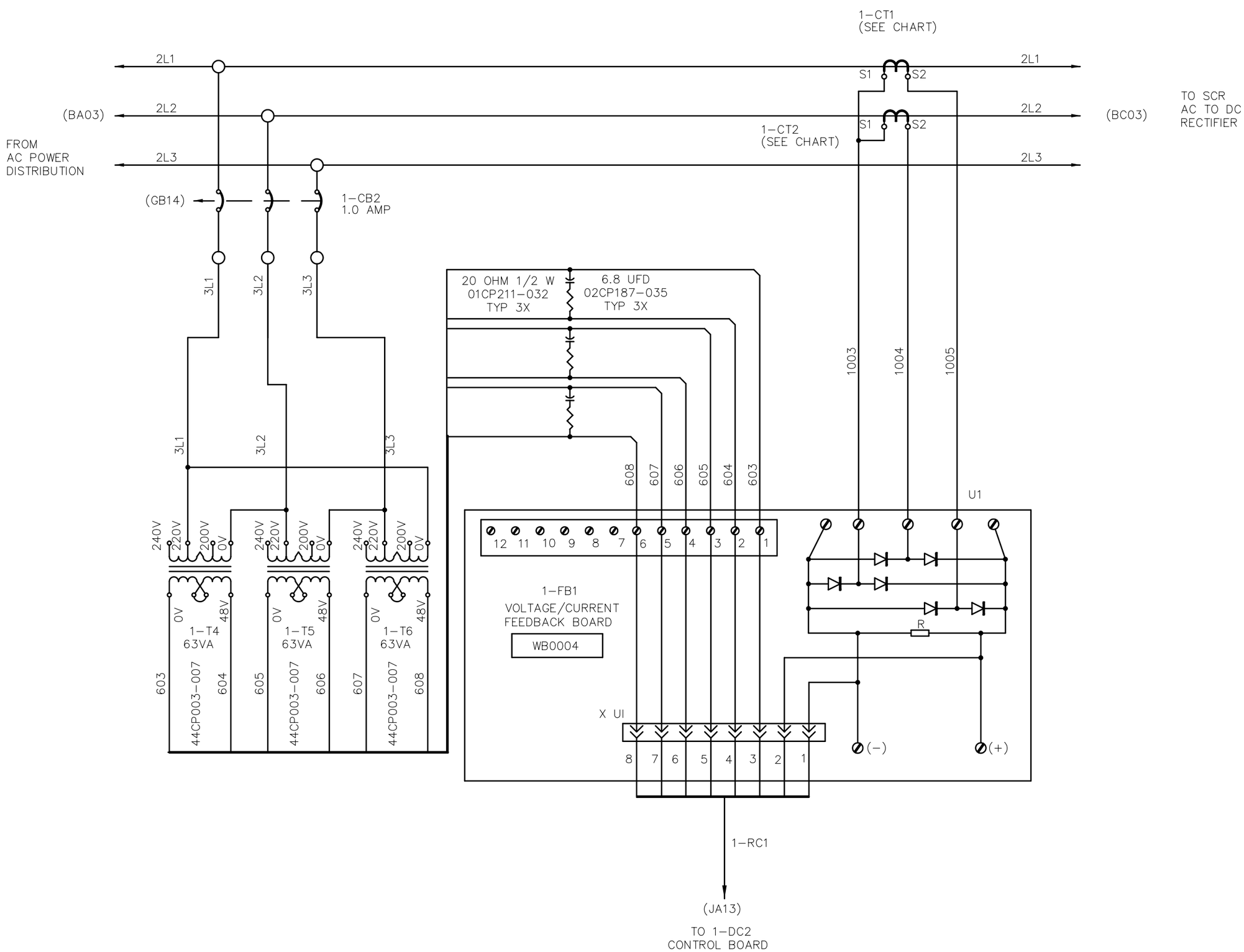

UNIT KILOWATTS	1-CT1,1-CT2 RATIO
400KW	2500:1
500KW	3500:1
600KW	3500:1
800KW	6000:1

THERMATOOL®

SIZE	DIV NO	DWG NO	REV
A1	1	WW5128S	A
SCALE NONE	DO NOT SCALE DRAWING COPY	SHEET	BB

ENG-REF:

AC POWER DISTRIBUTION (DC RECTIFIERS)

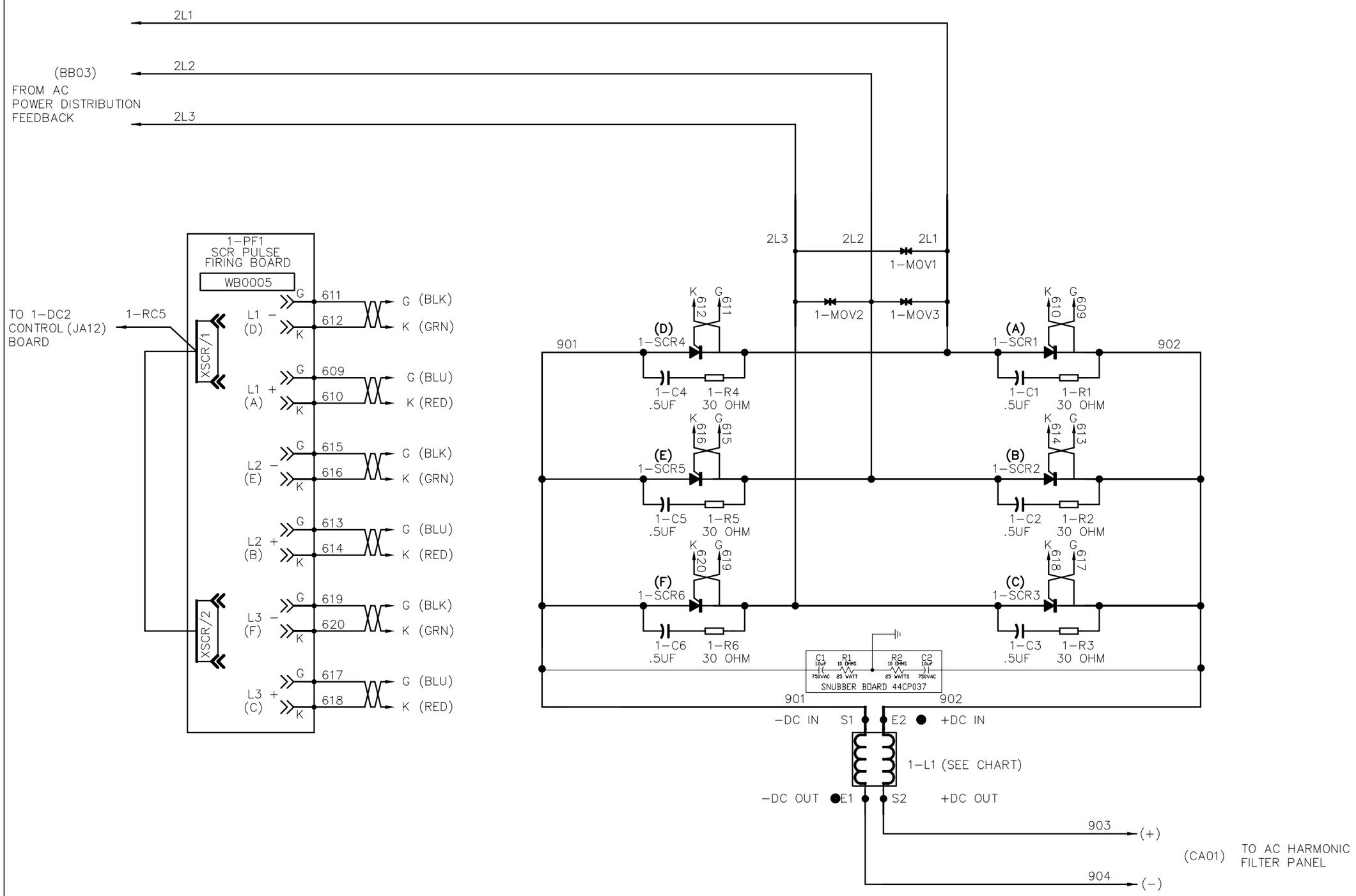

UNIT KILOWATTS	1-L1
400	0.53mH
500	0.42mH
600	0.35mH
800	0.27mH

THERMATOOL®

SIZE	DIV NO	DWG NO	REV
A1	1	WW5128S	A
SCALE NONE	DO NOT SCALE DRAWING COPY	SHEET	BC

ENG-REF:

AC HARMONIC FILTER

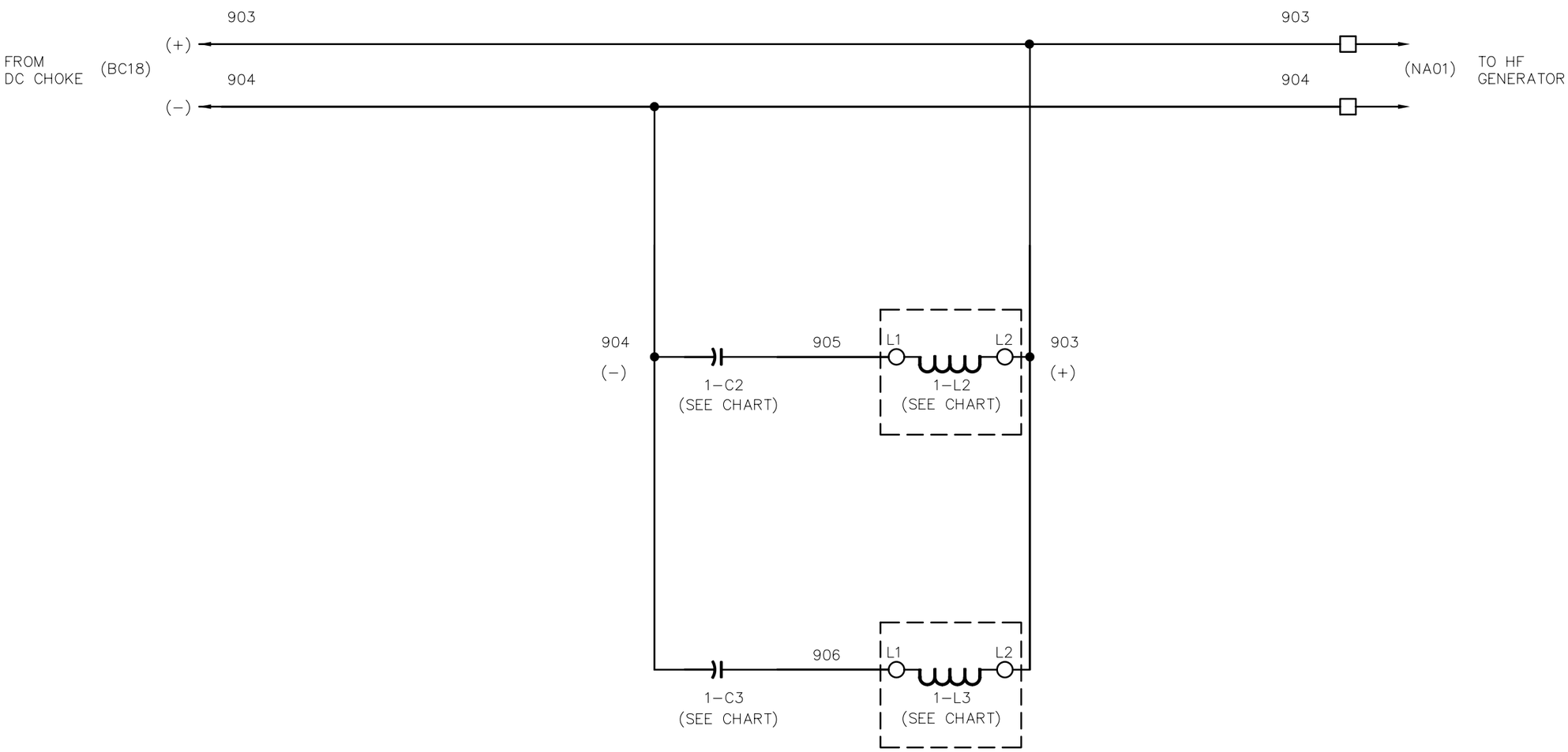

UNIT KILOWATTS		
	400-500	600-800
1-C2	(6) x 300uf	(6) x 300uf
1-L2	98-173 uH/100A	98-173 uH/180A
1-C3	(2) x 300uf	(2) x 300uf
1-L3	74-130 uH/70A	74-130 uH/70A

THERMATOOL®

SIZE	DIV NO	DWG NO	REV
A1	1	WW5128	A
SCALE NONE	DO NOT SCALE DRAWING COPY	SHEET	CA

ENG-REF:

AUXILLARY AC POWER DISTRIBUTION

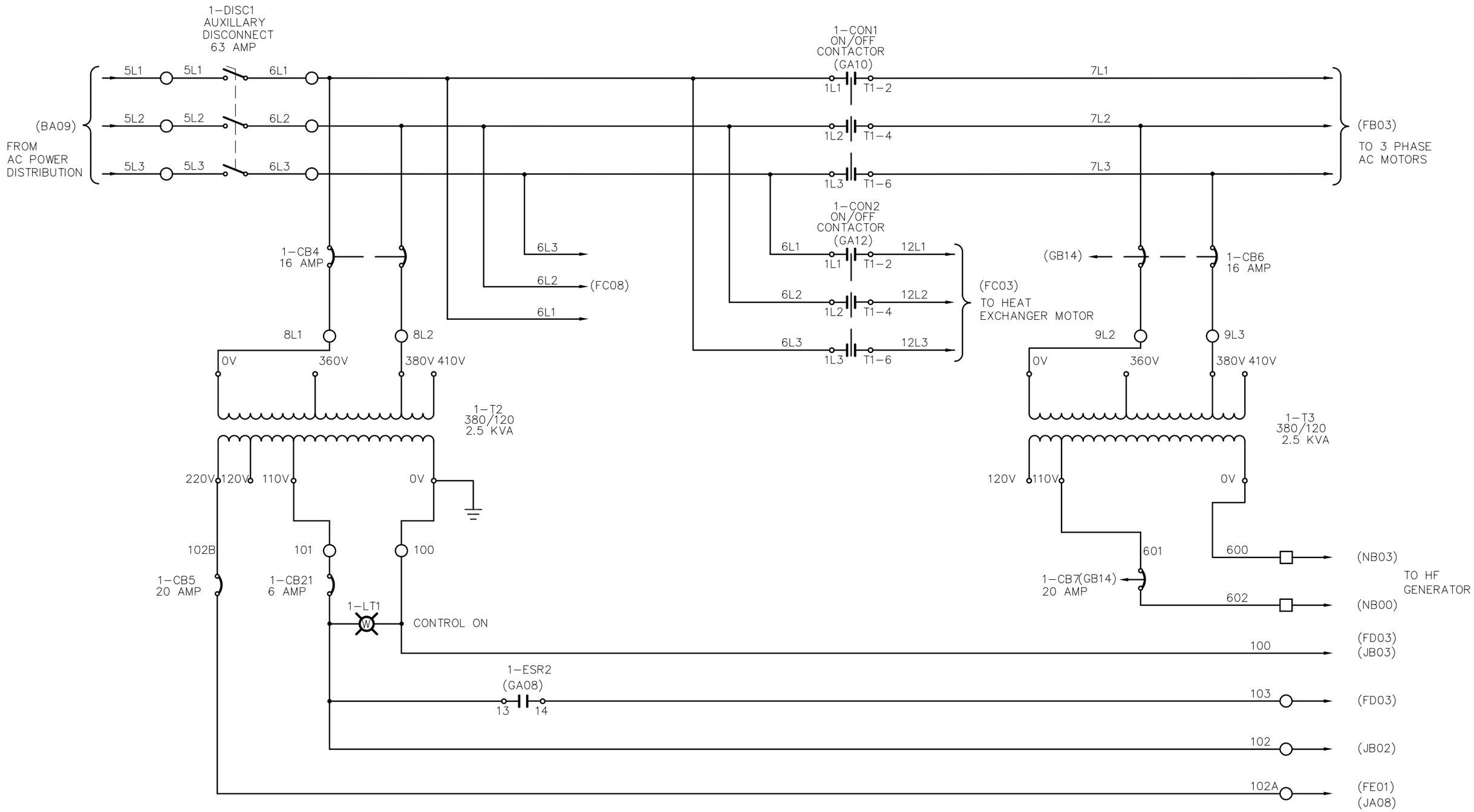

THERMATOOL®

SIZE	DIV NO	DWG NO	REV
A1	1	WW5128S	A
SCALE NONE	DO NOT SCALE DRAWING COPY	SHEET	FA

ENG-REF:

THREE PHASE AC MOTORS

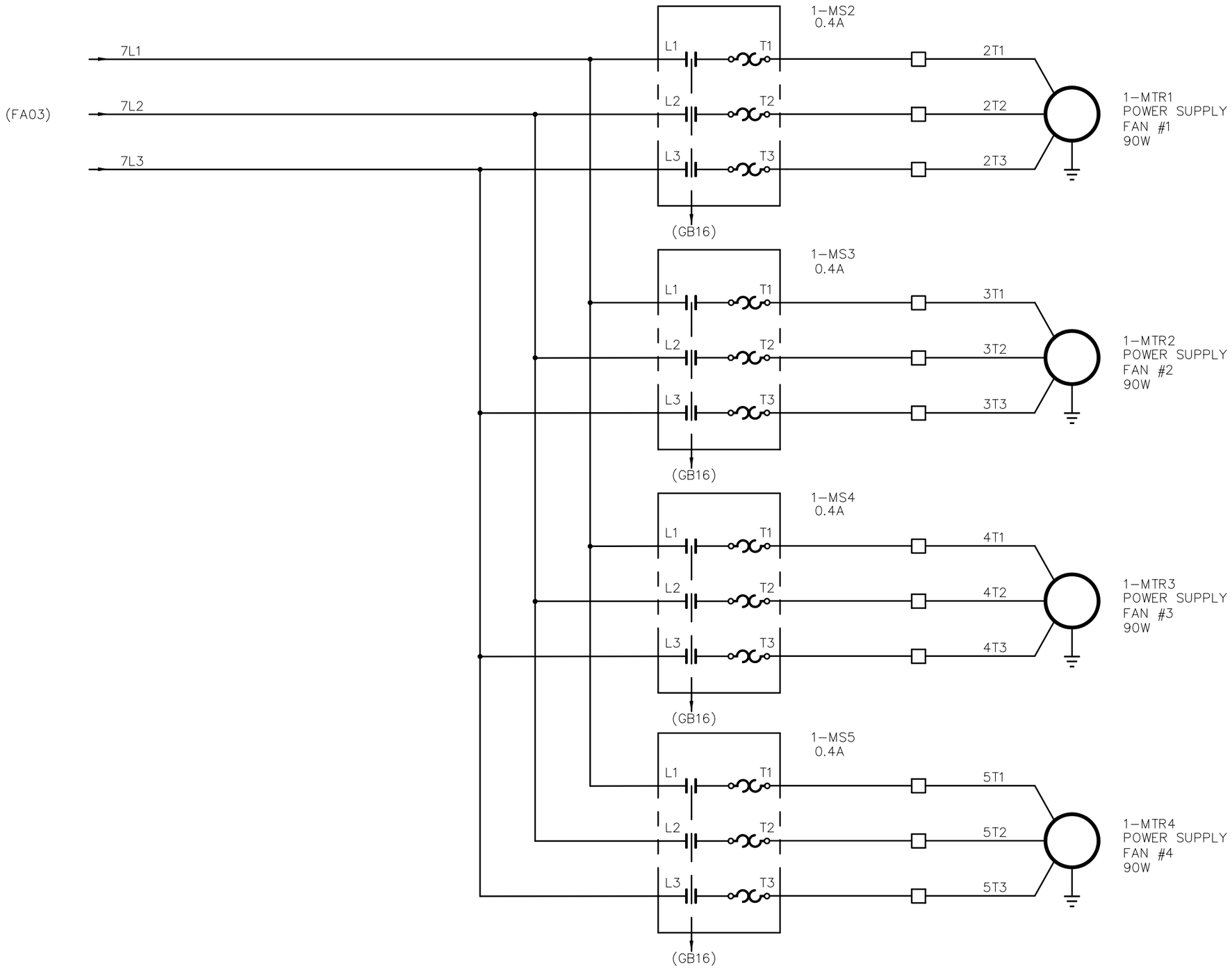

SIZE	DIV NO	DWG NO	REV
A1	1	WW5128S	A
SCALE NONE	DO NOT SCALE DRAWING COPY	SHEET FB	

THERMATOOL®

ENG-REF:

THREE PHASE AC MOTORS

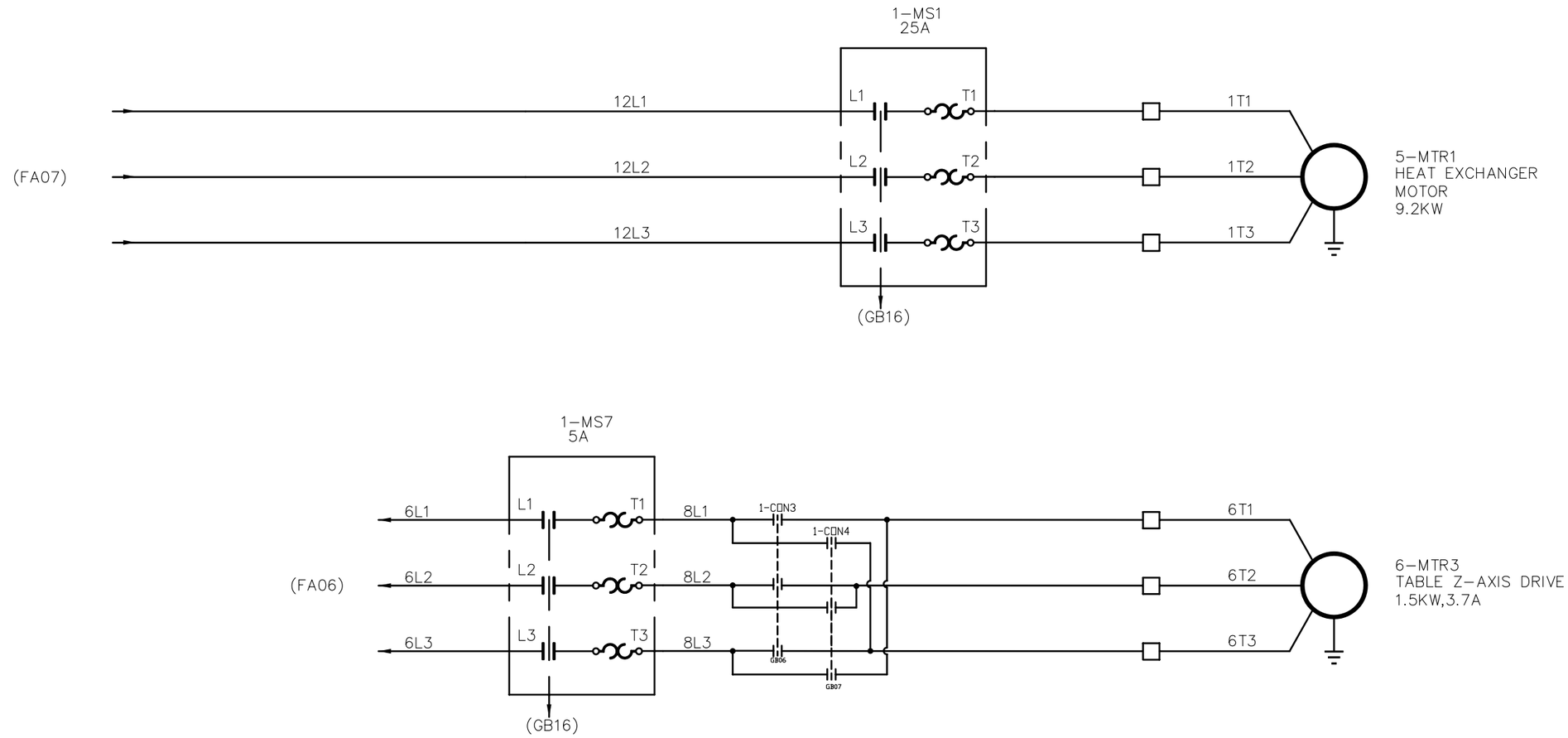

THERMATOOL®

SIZE	DIV NO	DWG NO	REV
A1	1	WW5128S	A
SCALE NONE	DO NOT SCALE DRAWING COPY	SHEET	FC

ENG-REF:

SINGLE PHASE AC MOTORS

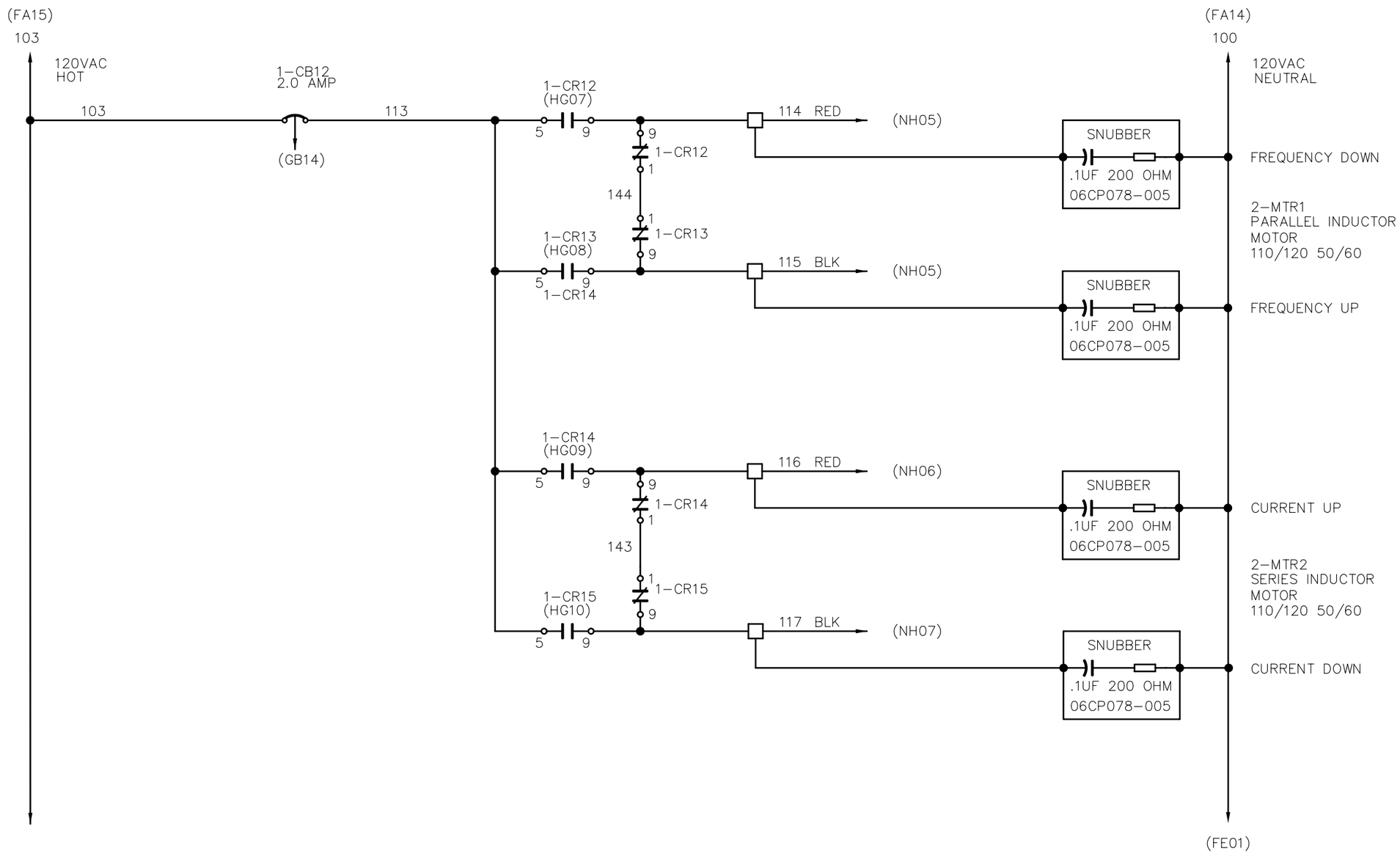

THERMATOOL®

SIZE	DIV NO	DWG NO	REV
A1	1	WW5128S	A
SCALE NONE	DO NOT SCALE DRAWING COPY	SHEET	FD

ENG-REF:

AC CONTROLS

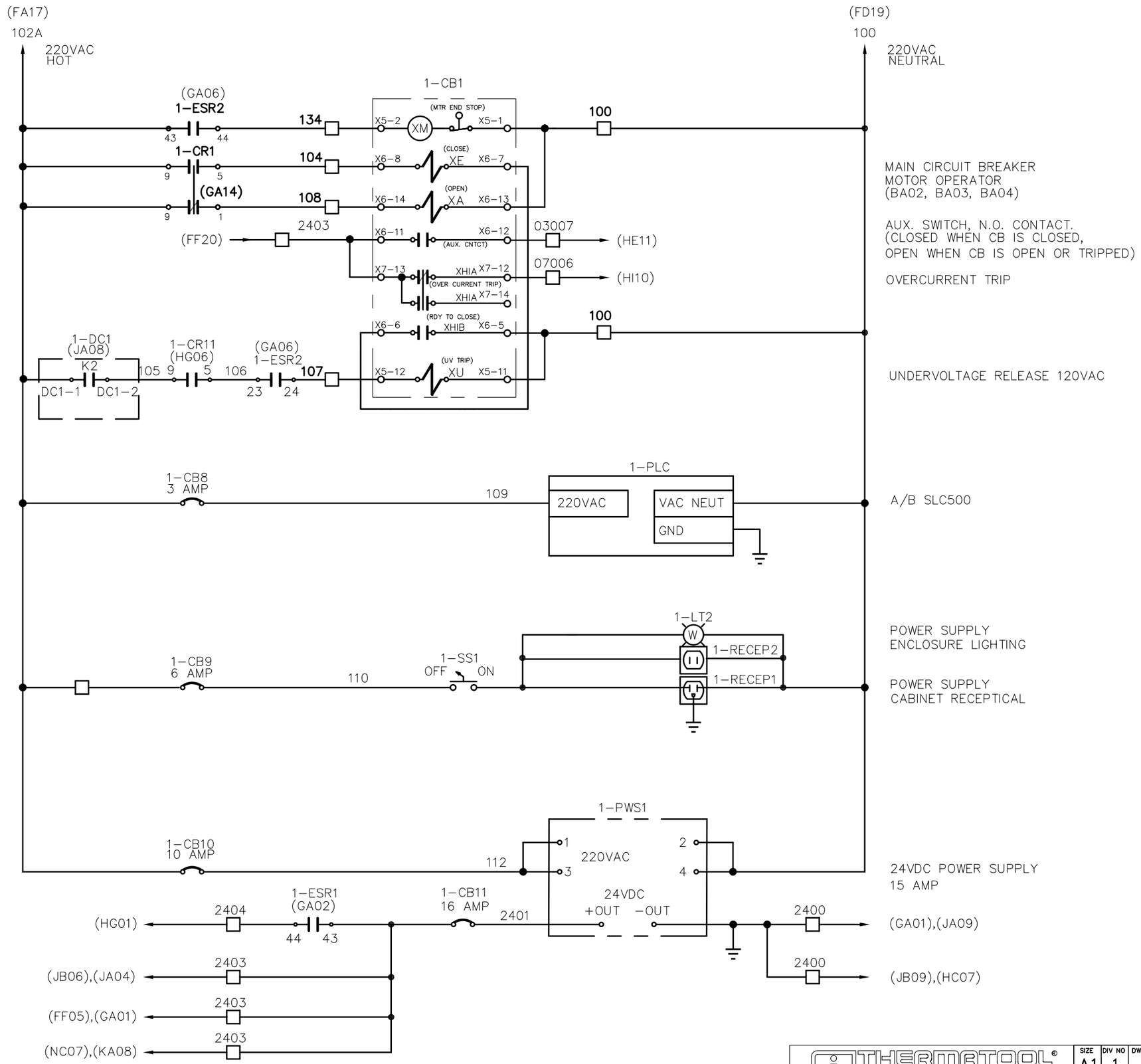

THERMATOOL®

SIZE	DIV NO	DWG NO	REV
A1	1	WW5128S	A
SCALE NONE		DO NOT SCALE DRAWING COPY	SHEET FE

ENG-REF:

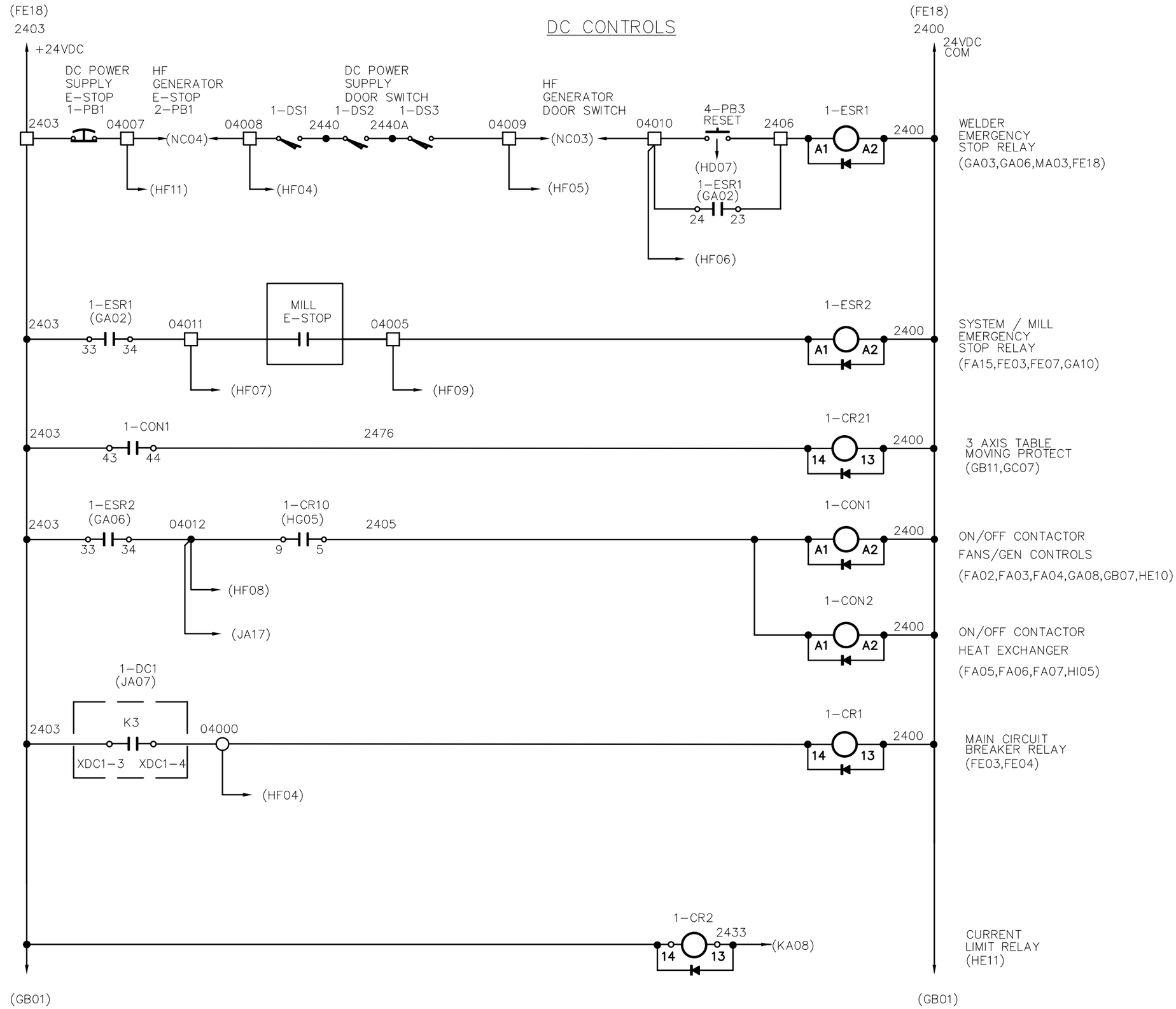

SIZE	DIV NO	DWG NO	REV
A1	1	WW5128S	A
SCALE NONE	DO NOT SCALE DRAWING COPY	SHEET	GA

THERMATOOL®

ENG-REF:

DC CONTROLS

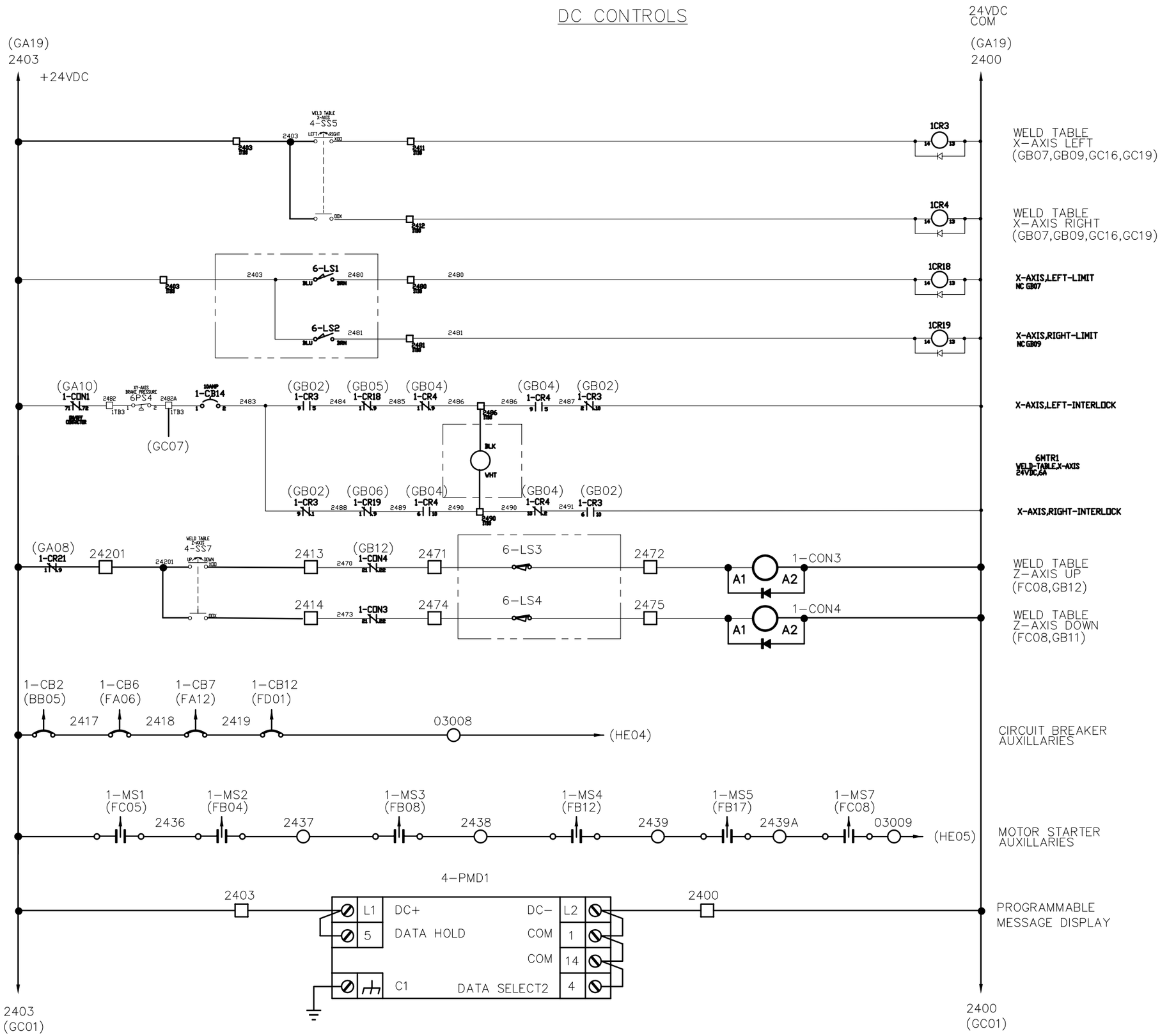

THERMATOOL®

SIZE	DIV NO	DWG NO	REV
A1	1	WW5128S	A
SCALE NONE	DO NOT SCALE DRAWING COPY	SHEET	GB

ENG-REF:

DC CONTROLS

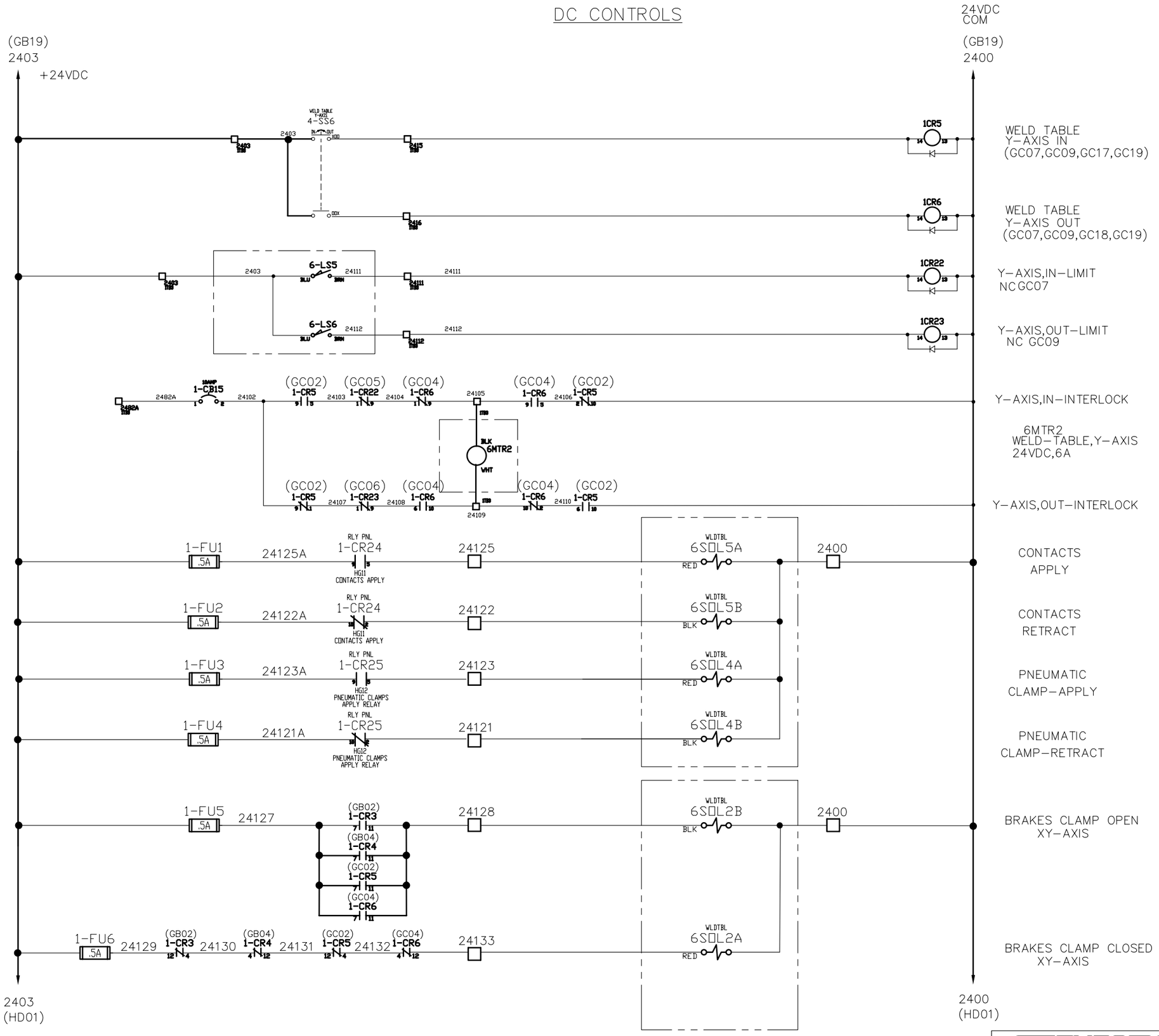

THERMATOOL®

SIZE	DIV NO	DWG NO	REV
A1	1	WW5128S	A
SCALE NONE	DO NOT SCALE DRAWING COPY	SHEET	GC

ENG-REF:

PLC LAYOUT

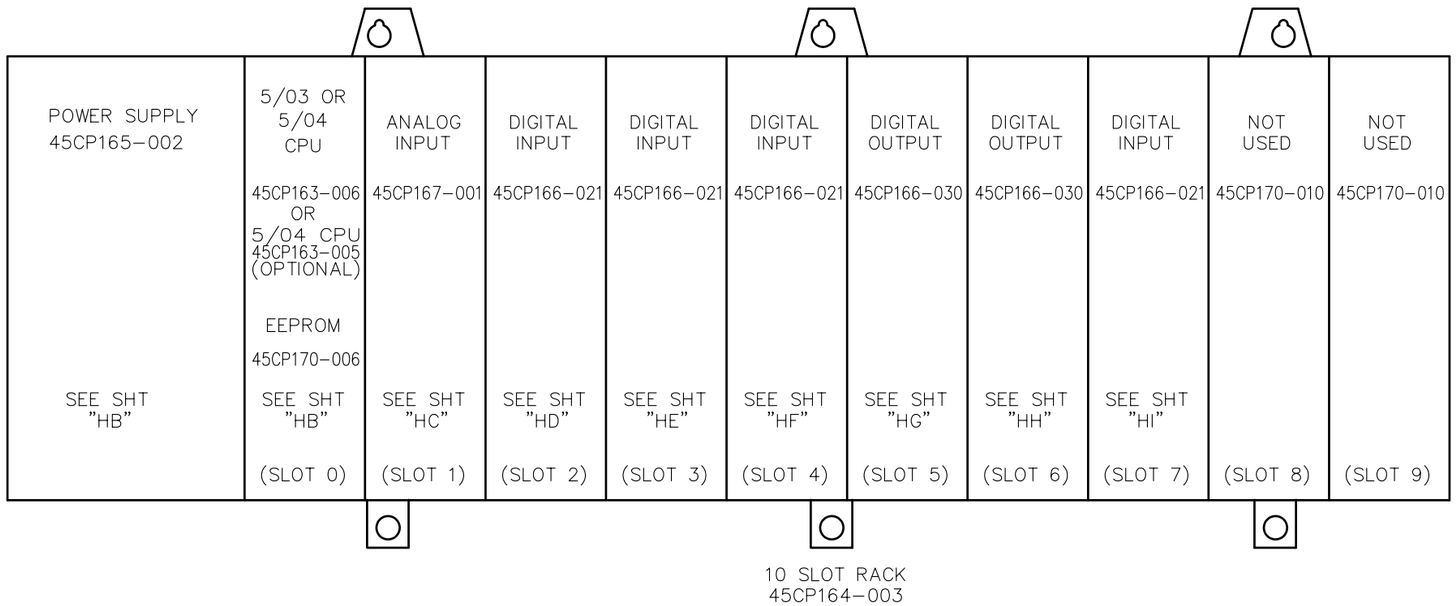

THERMATOOL®

SIZE	DIV NO	DWG NO	REV
A1	1	WW5128	A
SCALE NONE	DO NOT SCALE DRAWING COPY	SHEET	HA

ENG-REF:

PLC POWER SUPPLY & CPU SLOT 0

(FRONT VIEW)

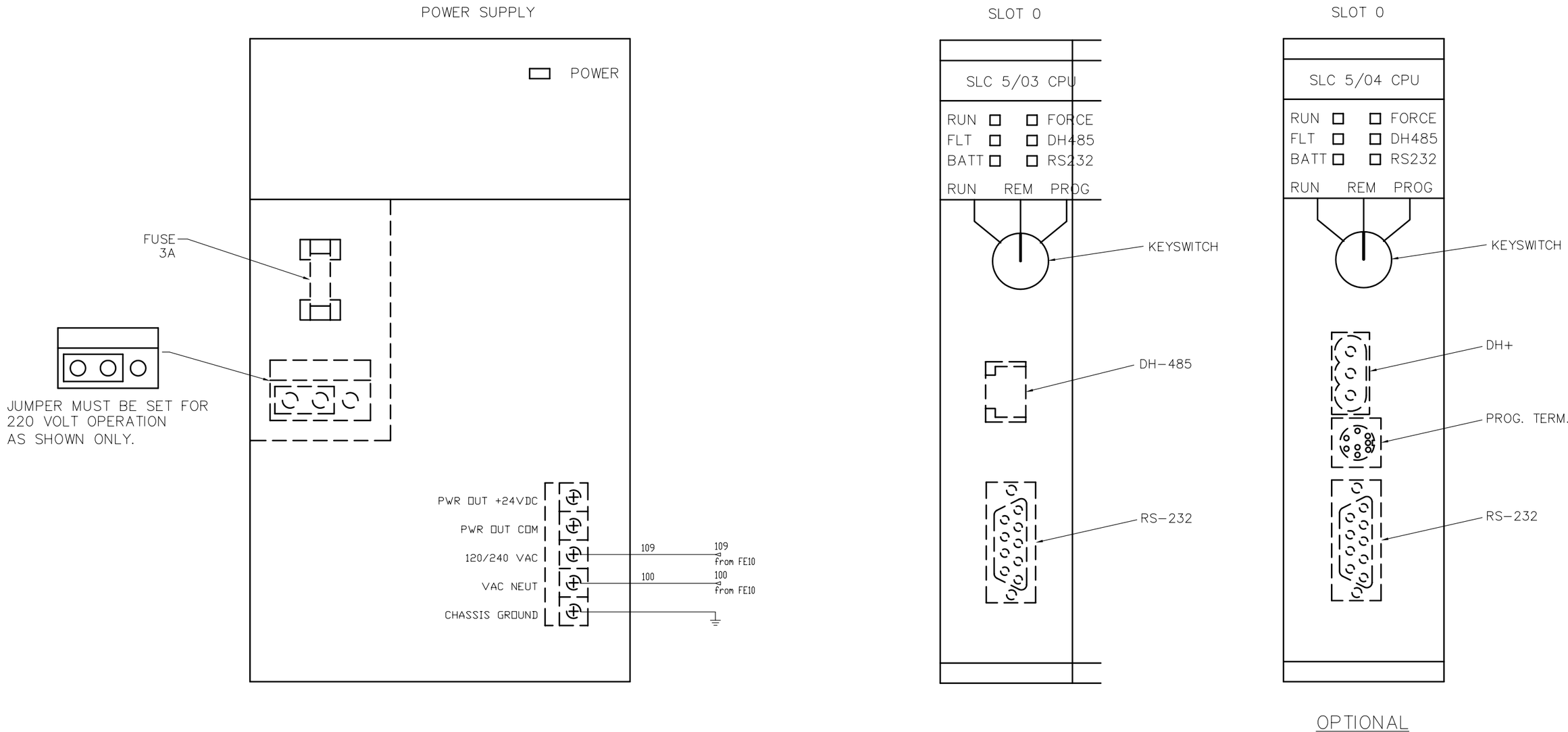

THERMATOOL®

SIZE	DIV NO	DWG NO	REV
A1	1	WW5128S	A
SCALE NONE	DO NOT SCALE DRAWING COPY	SHEET	HB

ENG-REF:

PLC ANALOG INPUTS (SLOT 1)

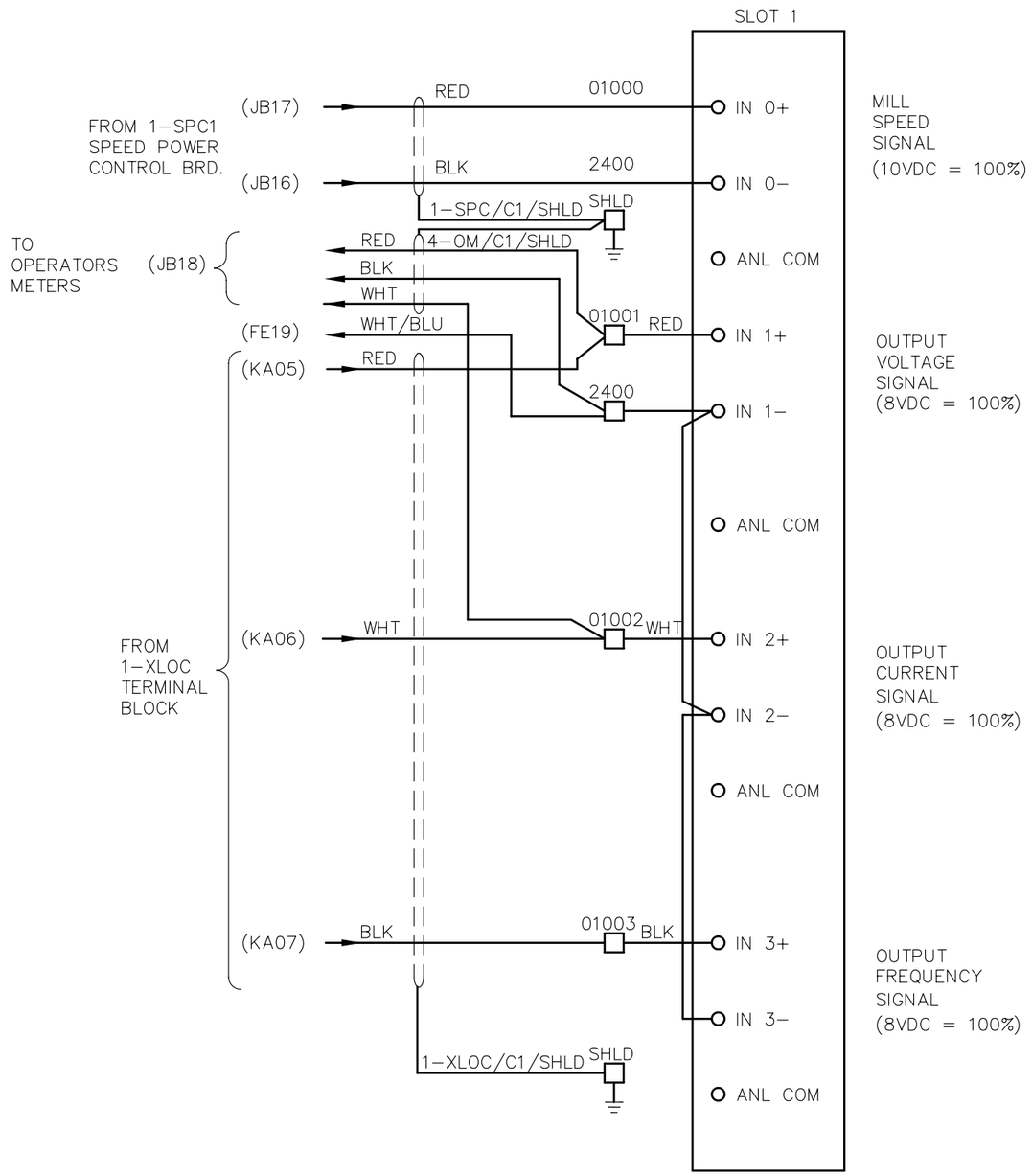

THERMATOOL®

SIZE	DIV NO	DWG NO	REV
A1	1	WW5128S	A
SCALE NONE	DO NOT SCALE DRAWING COPY	SHEET	HC

ENG-REF:

PLC DIGITAL INPUTS (SLOT 2)

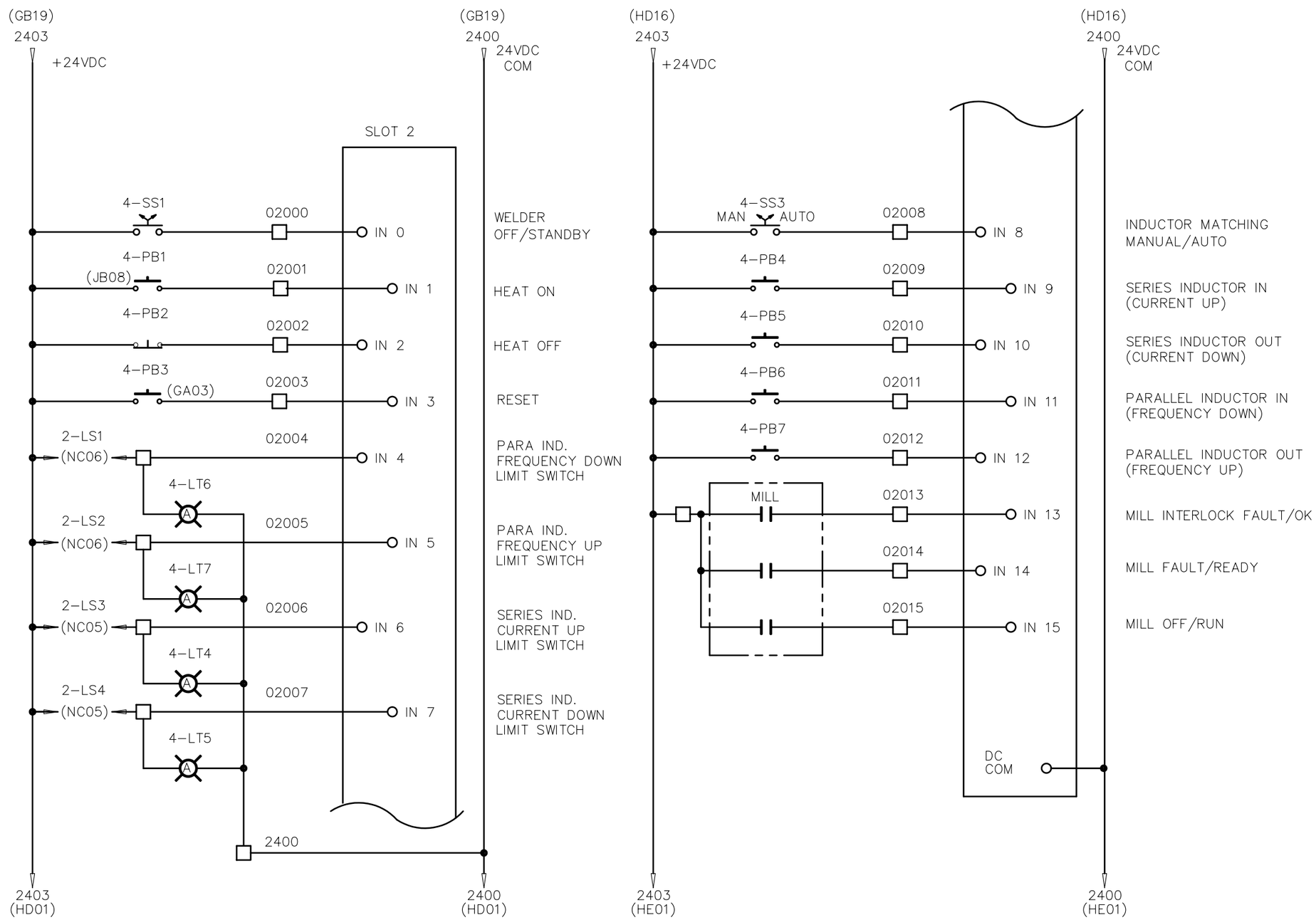

THERMATOOL®

SIZE	DIV NO	DWG NO	REV
A1	1	WW5128S	A
SCALE NONE	DO NOT SCALE DRAWING COPY	SHEET	HD

ENG-REF:

PLC DIGITAL INPUTS (SLOT 3)

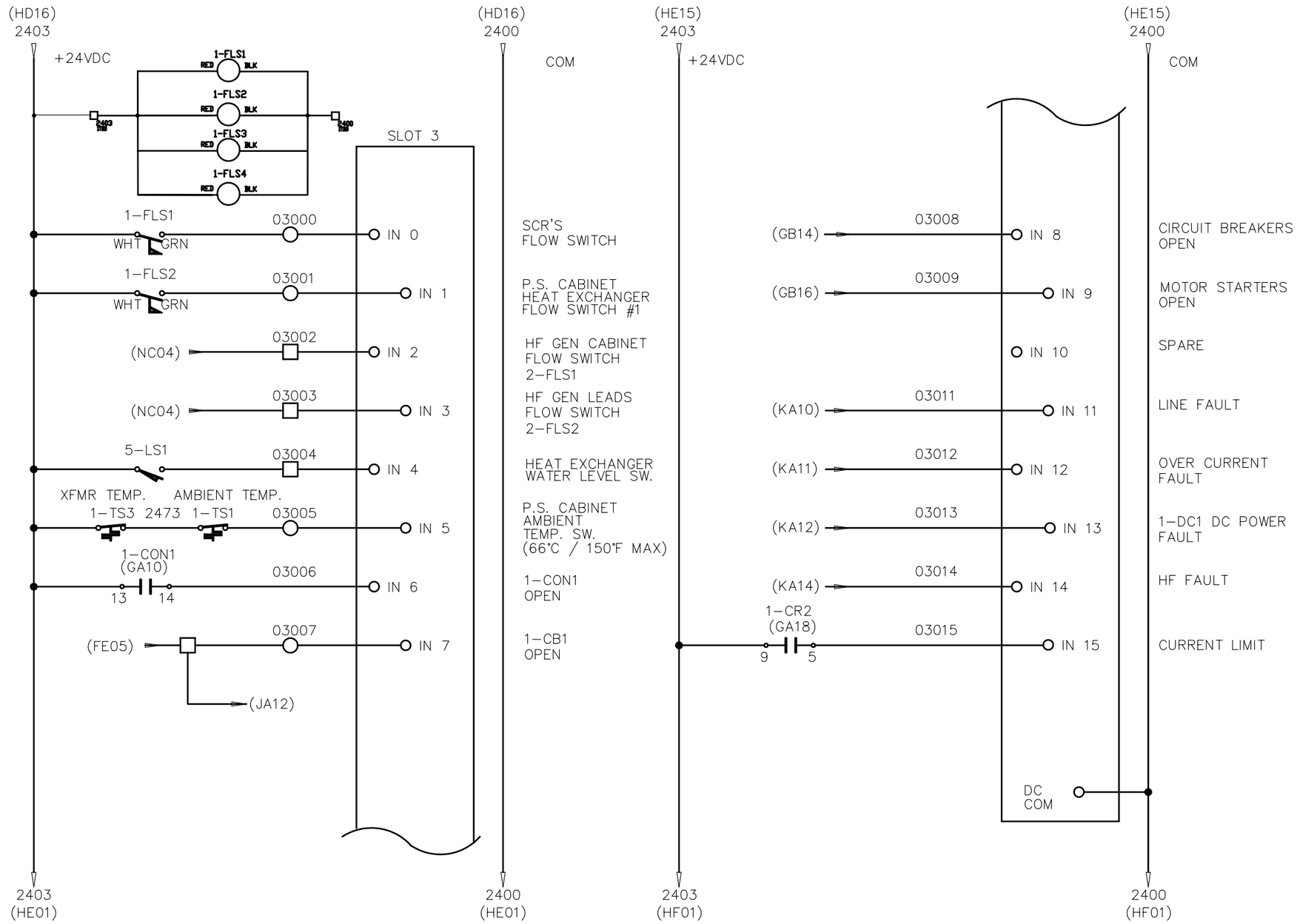

SIZE	DIV NO	DWG NO	REV
A1	1	WW5128S	A
SCALE NONE	DO NOT SCALE DRAWING COPY	SHEET	HE

THERMATOOL®

ENG-REF:

PLC DIGITAL INPUTS (SLOT 4)

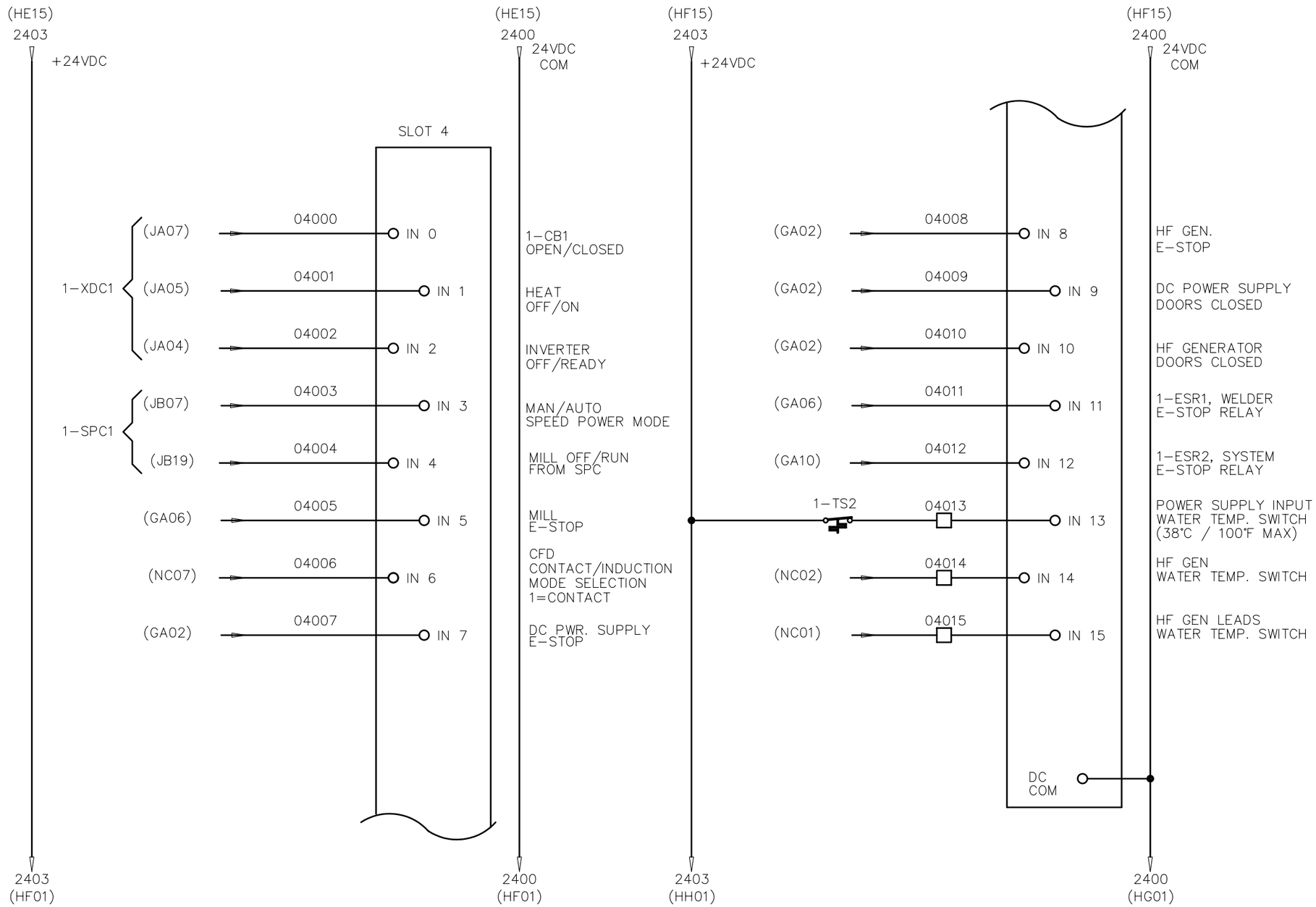

SIZE	DIV NO	DWG NO	REV
A1	1	WW5128S	A
SCALE NONE	DO NOT SCALE DRAWING COPY	SHEET	HF

ENG-REF:

PLC DIGITAL OUTPUTS (SLOT 5)

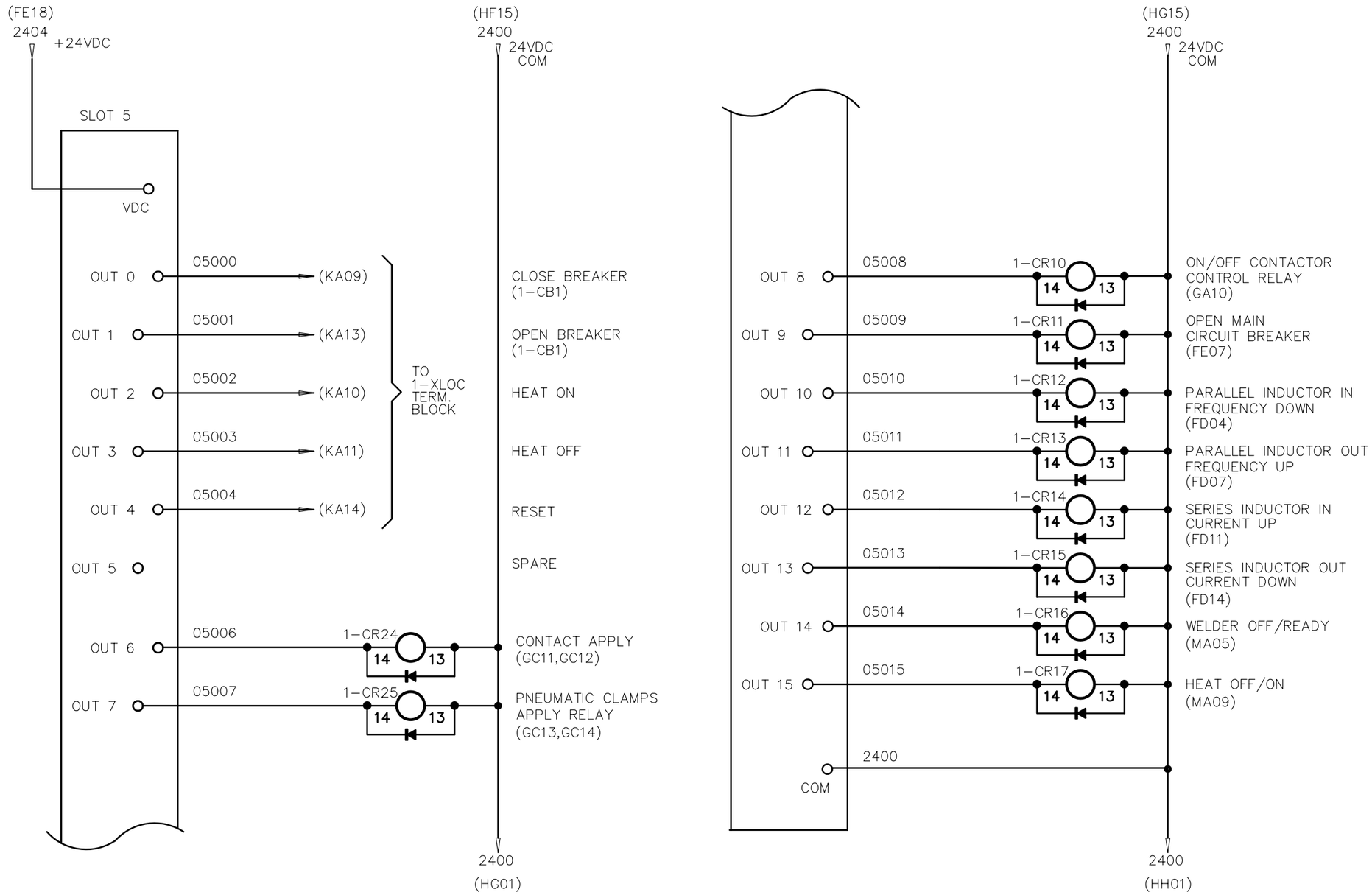

THERMATOOL®	SIZE	DIV NO	DWG NO	REV
	A1	1	WW5128S	A
	SCALE NONE	DO NOT SCALE DRAWING COPY	SHEET	HG

ENG-REF:

PLC DIGITAL OUTPUTS (SLOT 6)

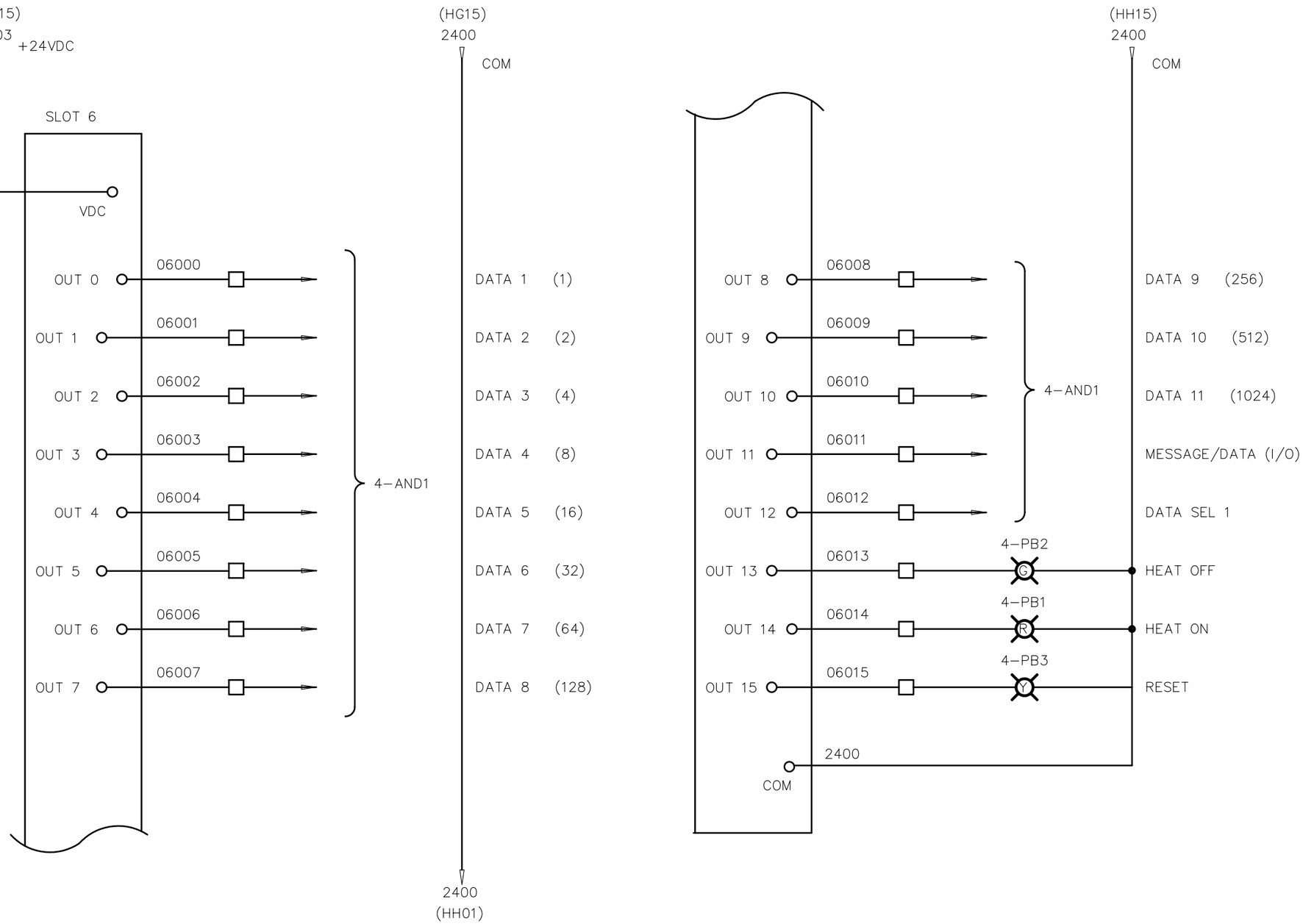

SIZE	DIV NO	DWG NO	REV
A1	1	WW5128S	A
SCALE NONE	DO NOT SCALE DRAWING COPY	SHEET HH	

THERMATOOL®

ENG-REF:

PLC DIGITAL INPUTS (SLOT 7)

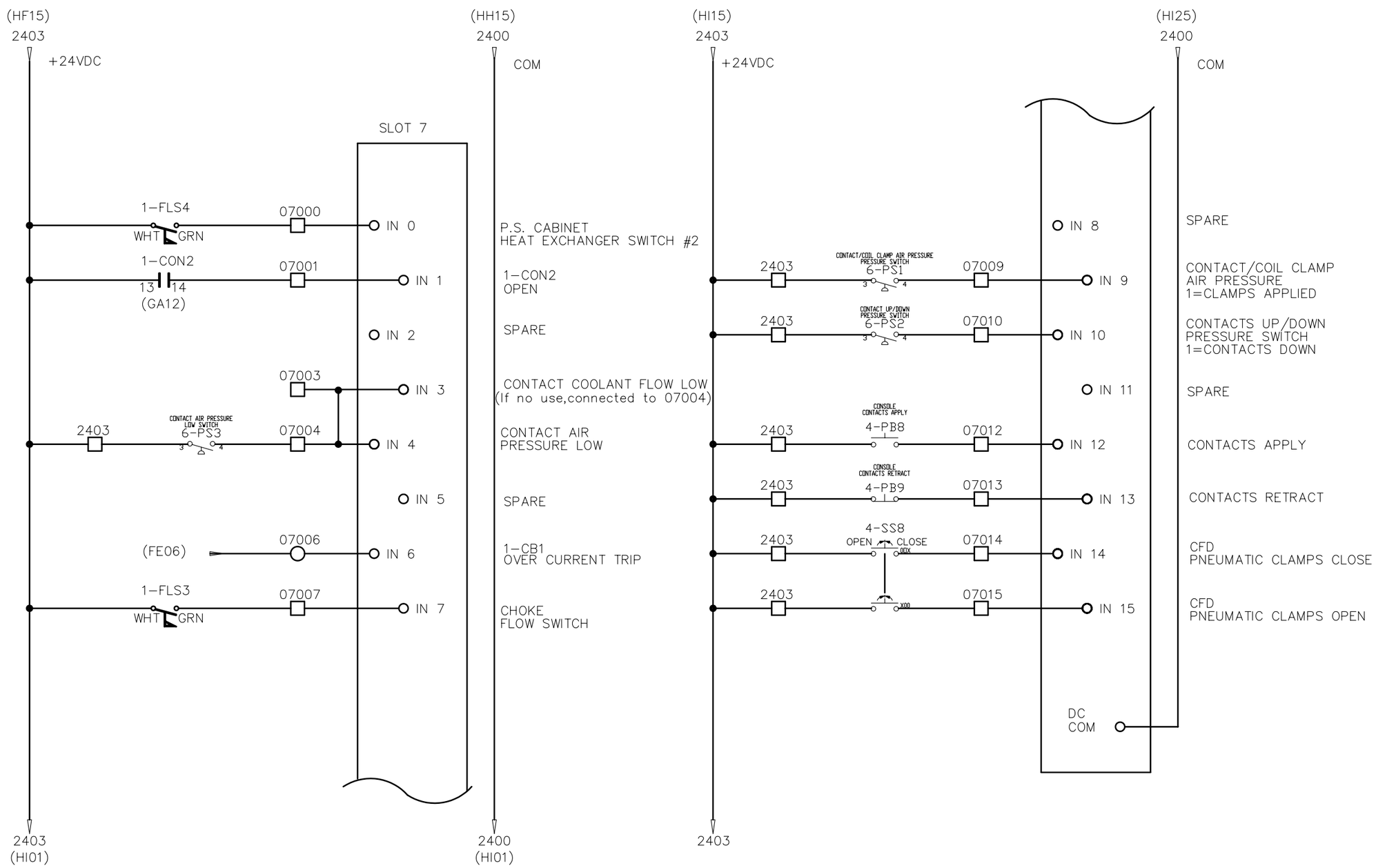

SIZE	DIV NO	DWG NO	REV
A1	1	WW5128S	B
SCALE NONE	DO NOT SCALE DRAWING COPY	SHEET	HI

ENG-REF:

1-DC1 & 1-DC2 CONTROL BOARDS

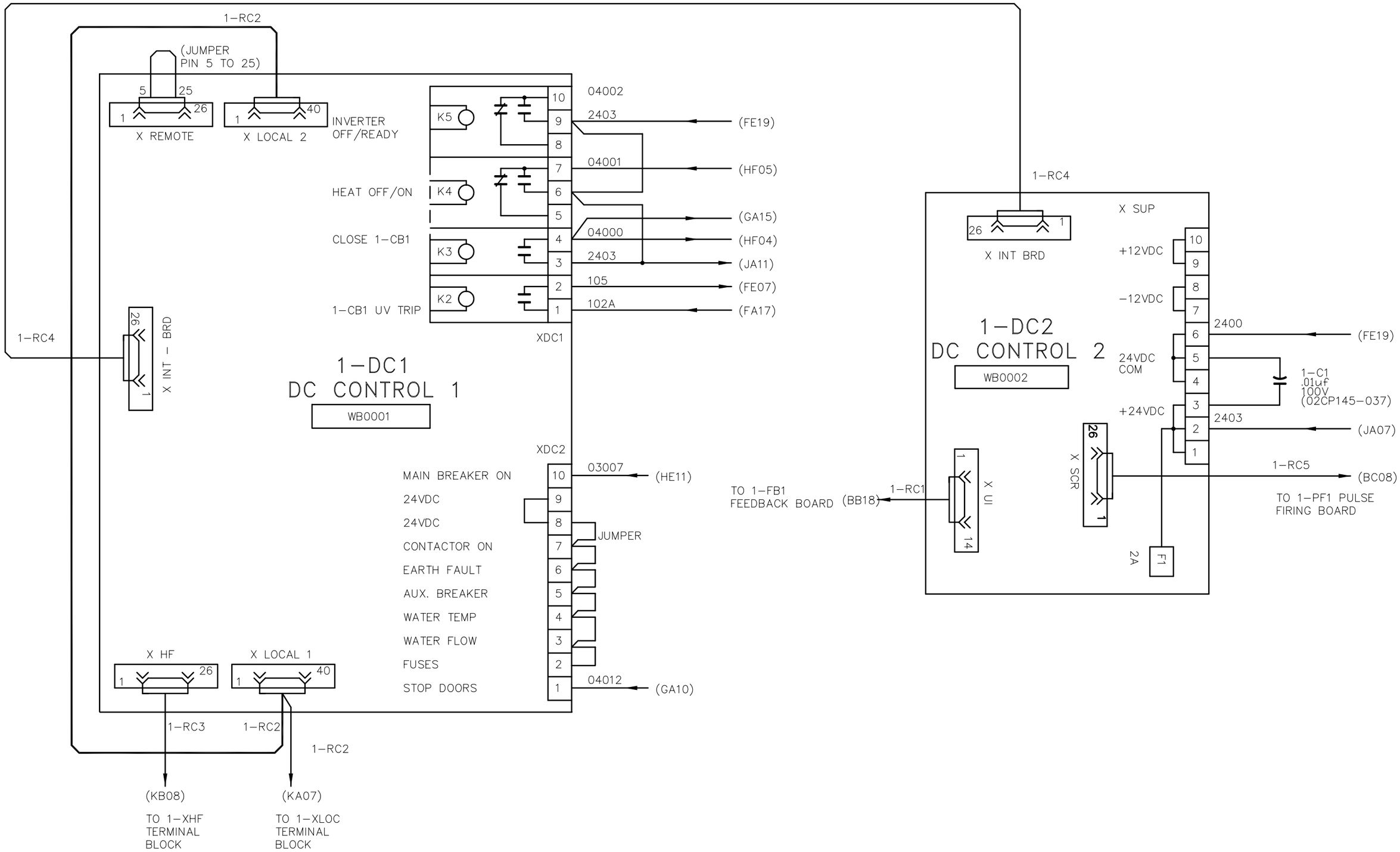

SIZE	DIV NO	DWG NO	REV
A1	1	WW5128S	A
SCALE NONE	DO NOT SCALE DRAWING COPY	SHEET	JA

THERMATOOL®

ENG-REF:

1-SPC1 SPEED POWER CONTROL BOARD

NOTE:
1. ALL SHIELDED WIRES ARE #18 AWG.

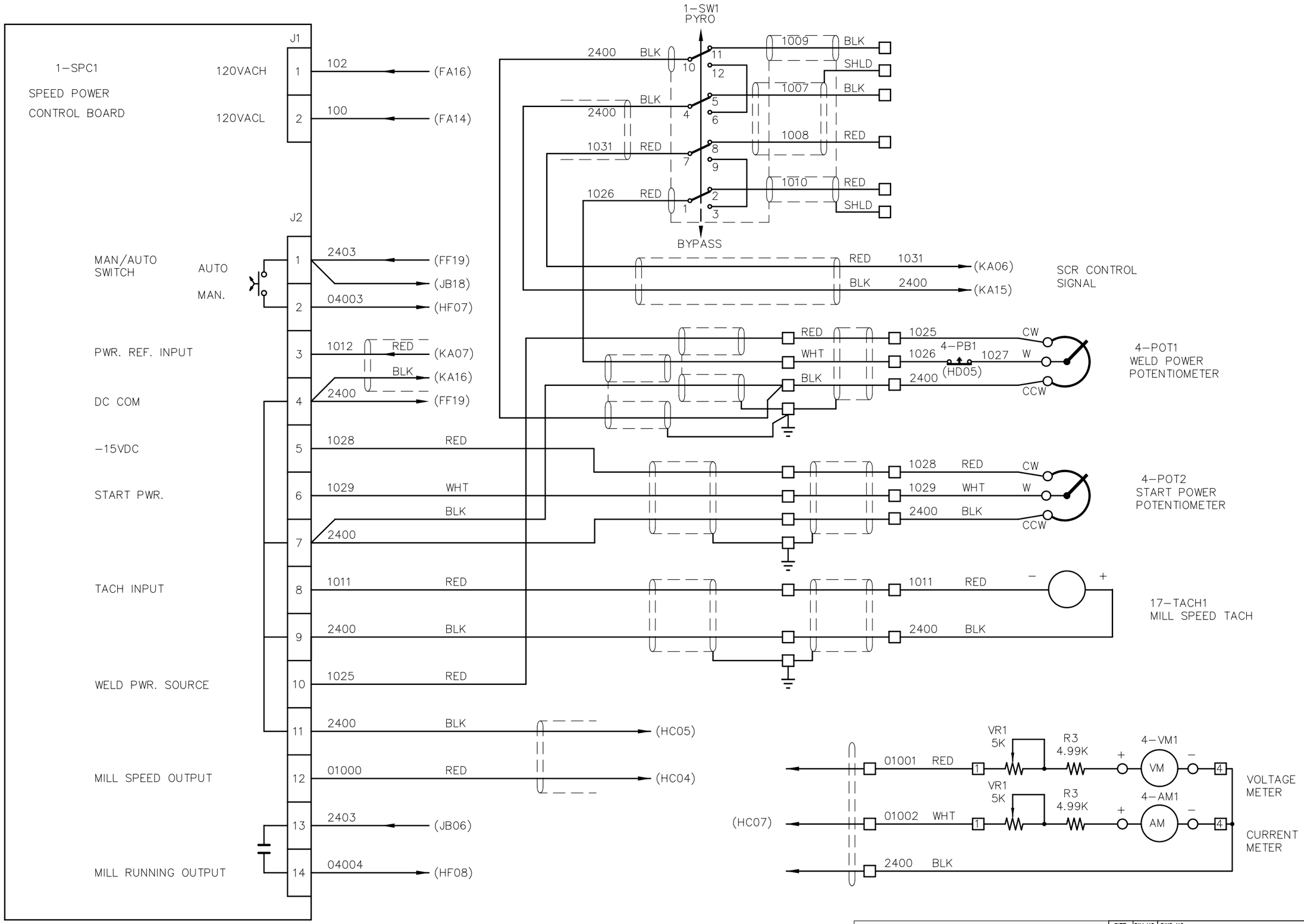

THERMATOOL®

SIZE	DIV NO	DWG NO	REV
A1	1	WW5128S	A
SCALE NONE	DO NOT SCALE DRAWING COPY	SHEET	JB

ENG-REF:

1-XLOC TERM. BLOCK

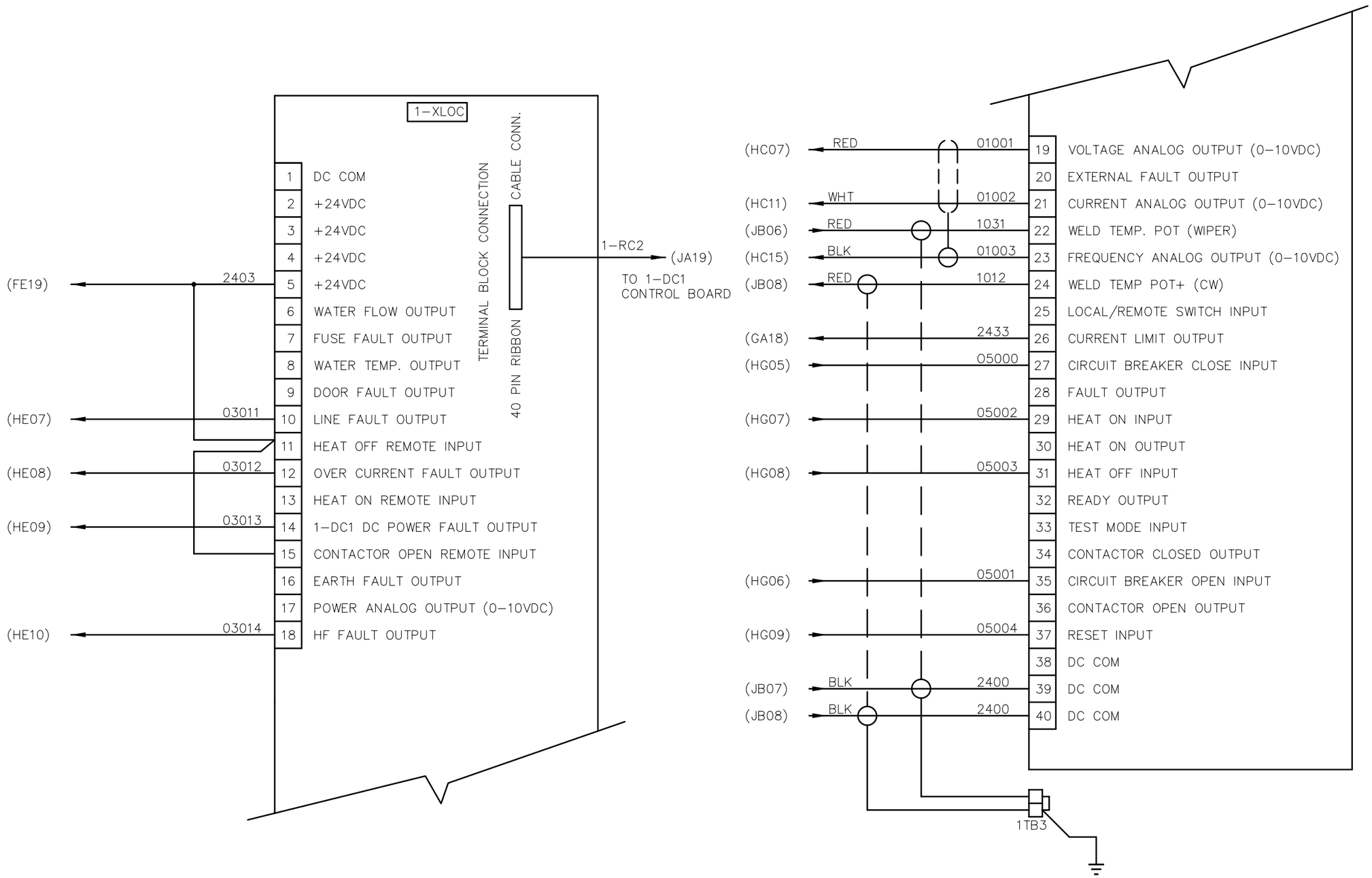

THERMATOOL®

SIZE	DIV NO	DWG NO	REV
A1	1	WW5128S	A
SCALE NONE	DO NOT SCALE DRAWING COPY	SHEET	KA

ENG-REF:

1–XHF TERM. BLOCK

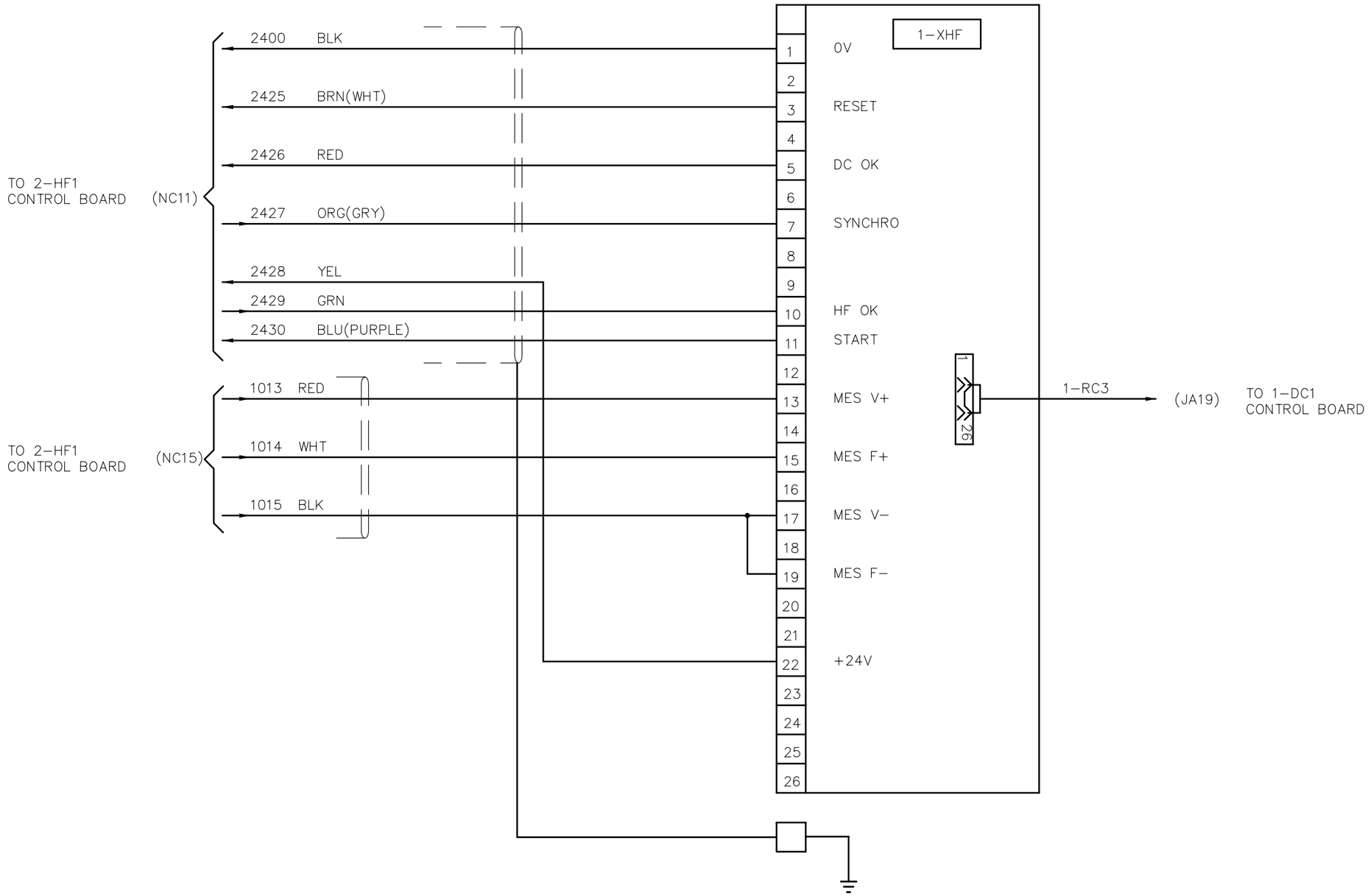

THERMATOOL®

SIZE	DIV NO	DWG NO	REV
A1	1	WW5128S	A
SCALE NONE	DO NOT SCALE DRAWING COPY	SHEET	KB

ENG–REF:

MILL INTERLOCKS

INPUTS FROM MILL CONTROLS
TO WELDER CONTROLS

CUSTOMER SUPPLIED
DRY CONTACTS

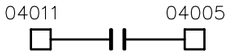

EMERGENCY STOP
(GA08)
WHEN THIS CONTACT IS OPEN IT WILL OPEN THE WELDER MAIN CIRCUIT BREAKER (1–CB1) REMOVING ALL POWER EXCEPT AUXILIARY POWER FOR CONTROLS.

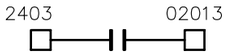

MILL INTERLOCK FAULT/OK
(WHEN THIS CONTACT IS OPEN IT WILL TURN THE WELDER HEAT OFF. SHOULD BE USED TO MONITOR IMPEDER COOLANT FLOW.)
(HD09) JUMPER IF NOT BEING USED

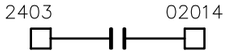

MILL FAULT/READY
WHEN THIS CONTACT IS OPEN IT WILL TURN HEAT OFF. THIS CONTACT MUST BE OPEN WHEN JOGGING MILL.
(HD10)

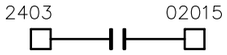

MILL OFF/RUN
(HD11)

THIS CONTACT MUST BE CLOSED TO TURN OUTPUT HEAT ON.
"MANUAL" SPEED POWER MODE – IN "MANUAL" MODE THE OUTPUT HEAT WILL TURN OFF WHEN THIS CONTACT OPENS.

"AUTOMATIC" SPEED POWER CONTROL MODE – IN "AUTOMATIC" MODE THE OUTPUT HEAT WILL TURN OFF WHEN THIS CONTACT IS OPEN AND THE MILL TACH HAS STOPPED.

OUTPUTS FROM WELDER CONTROLS
TO MILL CONTROLS

THERMATOOL SUPPLIED
DRY CONTACTS

WELDER EMERGENCY STOP
(GA08)

THIS NORMALLY OPEN CONTACT IS OPEN IF A WELDER DOOR SWITCH OR EMERGENCY PUSH BUTTON IS PRESSED. AFTER ALL CABINET DOOR SWITCHES AND EMERGENCY STOP BUTTONS ARE RETURNED TO A SAFE CONDITION THE EMERGENCY STOP RELAY MAY BE RESET BY PUSHING THE WELDER "RESET" PUSH BUTTON.

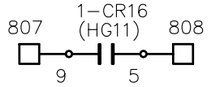

WELDER FAULT/READY
(HG11)

THIS NORMALLY OPEN CONTACT IS CLOSED UNDER THE FOLLOWING CONDITIONS

1.) IF THE WELDER "SHUT DOWN/STANDBY" SWITCH IS IN "SHUTDOWN" POSITION AND THE EMERGENCY STOP RELAY IS RESET.

2.) IN "MANUAL" SPEED POWER CONTROL MODE – THE "SHUTDOWN/STANDBY" SWITCH IS IN "STANDBY" POSITION AND THERE ARE NO WELDER FAULTS.

3.) IN "AUTOMATIC" SPEED POWER CONTROL MODE – THE CONDITION IS THE SAME AS IN "MANUAL" WITH THE ADDITION OF THE WELDER "HEAT ON" PUSH BUTTON MUST BE PRESSED.

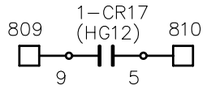

WELD HEAT OFF/ON
(HG12)

THIS NORMALLY OPEN CONTACT IS OPEN WHEN OUTPUT HEAT IS OFF.
THE CONTACT IS CLOSED WHEN OUTPUT HEAT IS ON.

THERMATOOL®

SIZE	DIV NO	DWG NO	REV
A1	1	WW5128S	A
SCALE NONE	DO NOT SCALE DRAWING COPY	SHEET	MA

ENG–REF:

HF OUTPUT CIRCUIT

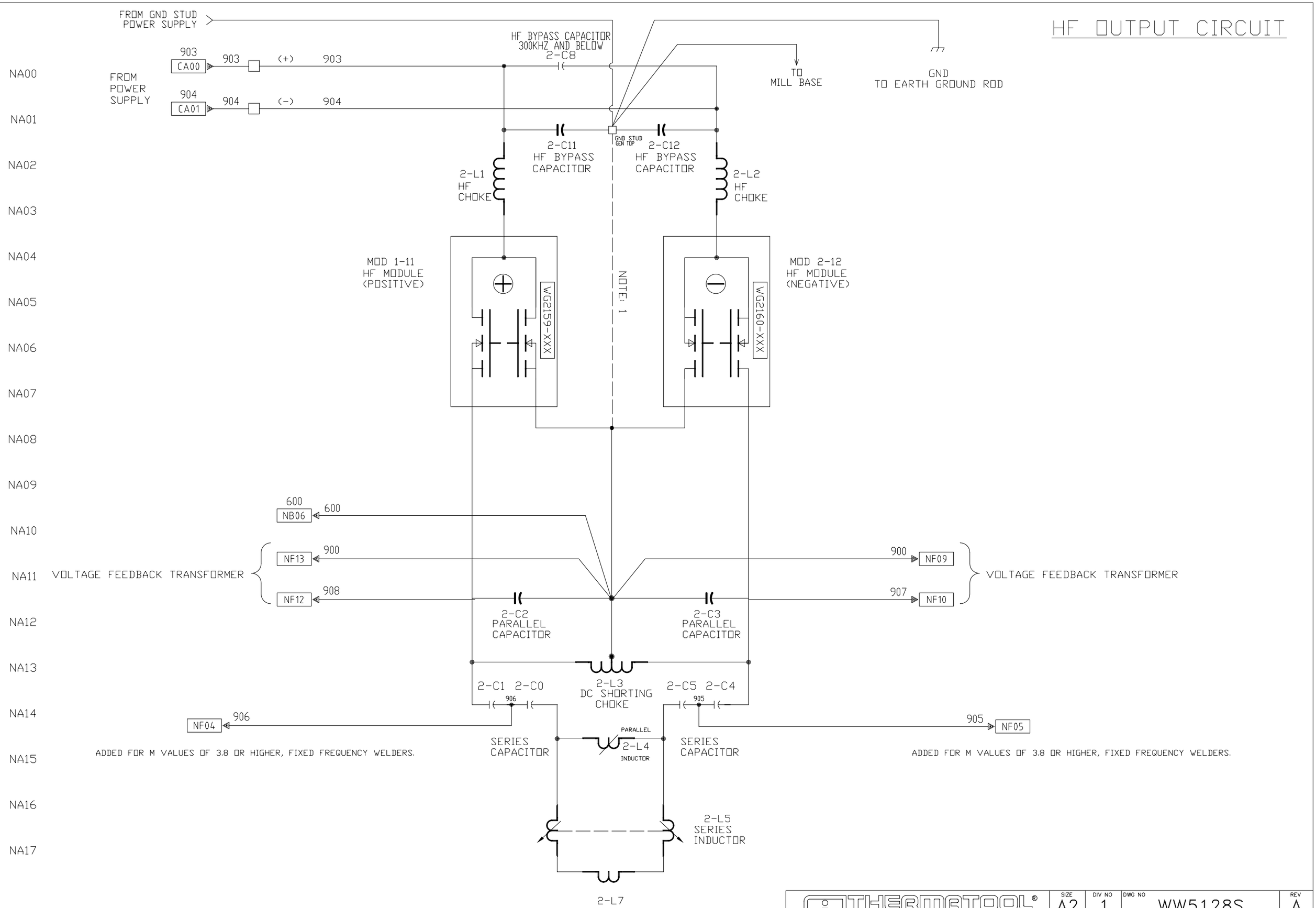

NOTE 1: THIS CONNECTION IS MADE ON CFI WELDERS ONLY, AND IS NOT PRESENT ON CFC OR CFD WELDERS.

THERMATOOL®	SIZE	DIV NO	DWG NO	REV
	A2	1	WW5128S	A
	SCALE 1:1	DO NOT SCALE DRAWING COPY	SHEET	NA

ENG-REF:

HF GENERATOR AC CONTROLS

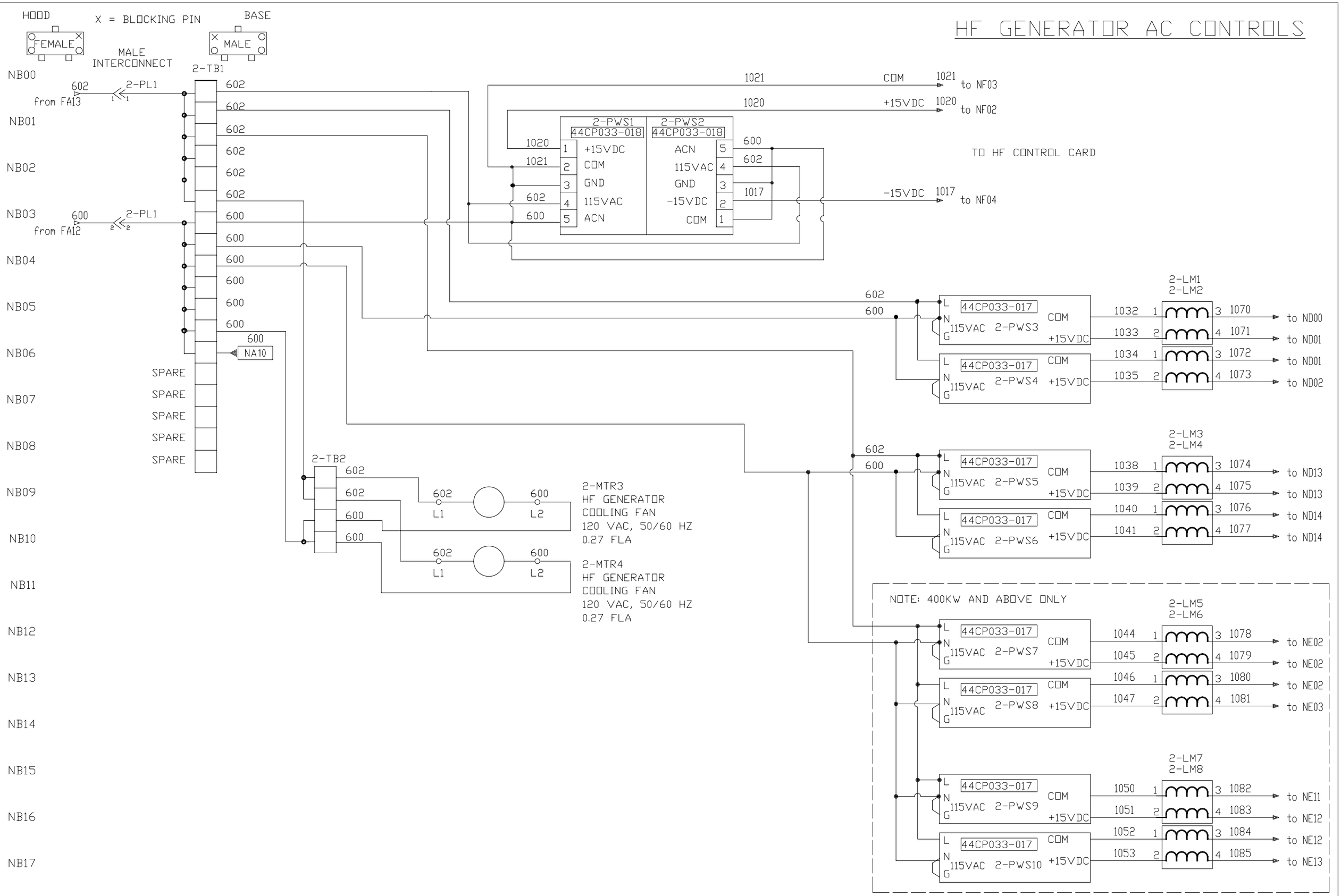

THERMATOOL®	SIZE	DIV NO	DWG NO	REV
	A2	1	WW5128S	A
	SCALE 1:1		DO NOT SCALE DRAWING COPY	SHEET NB

ENG-REF:

HF GENERATOR INTERLOCKS

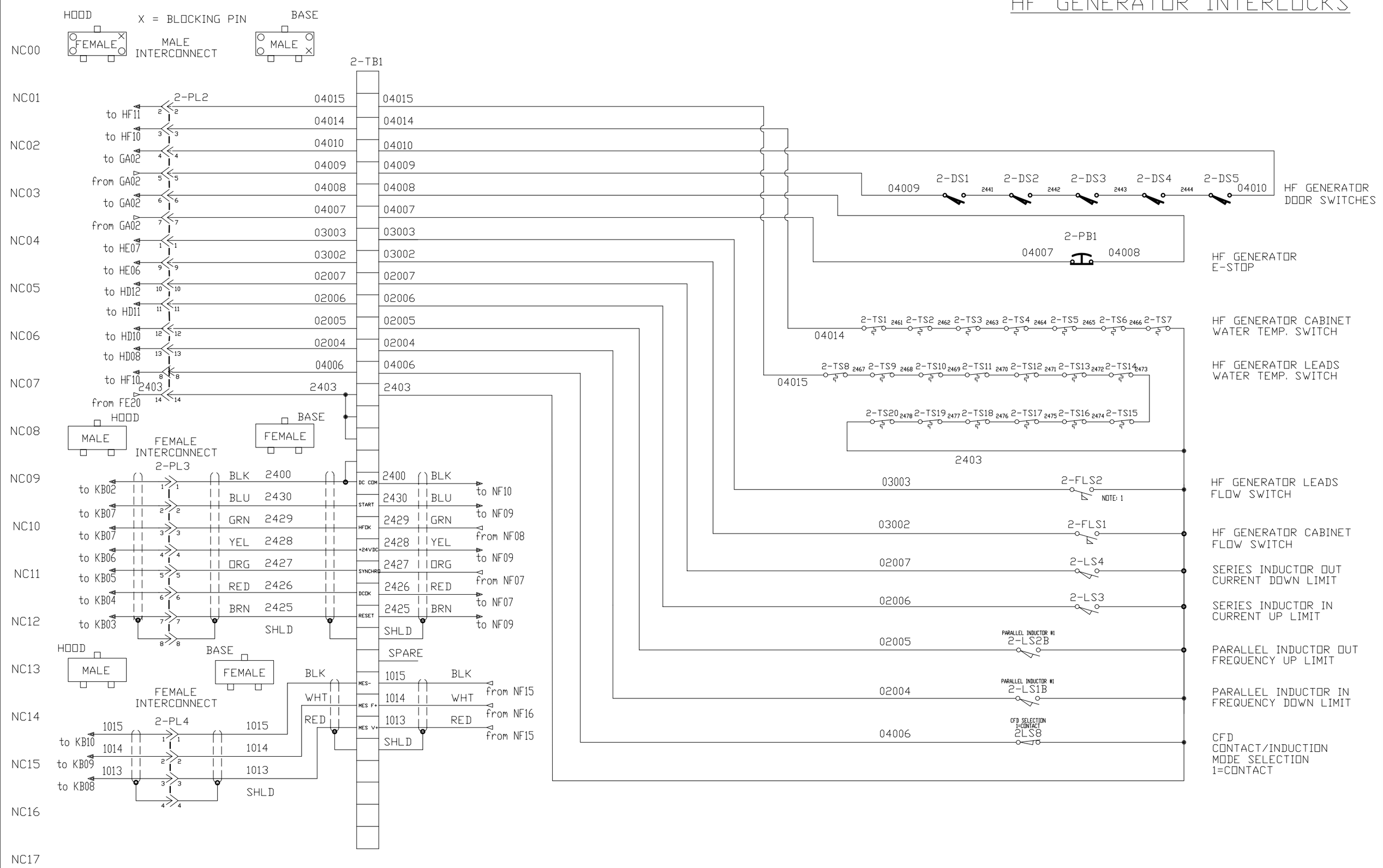

NOTE: 1 2-FLS2 FLOW SWITCH IS ONLY PRESENT IN HF24 GENERATOR CABINETS.

THERMATOOL®

SIZE	DIV NO	DWG NO	REV
A2	1	WW5128S	A
SCALE 1:1	DO NOT SCALE DRAWING COPY	SHEET	NC

ENG-REF:

HF MODULES POWER SUPPLY'S

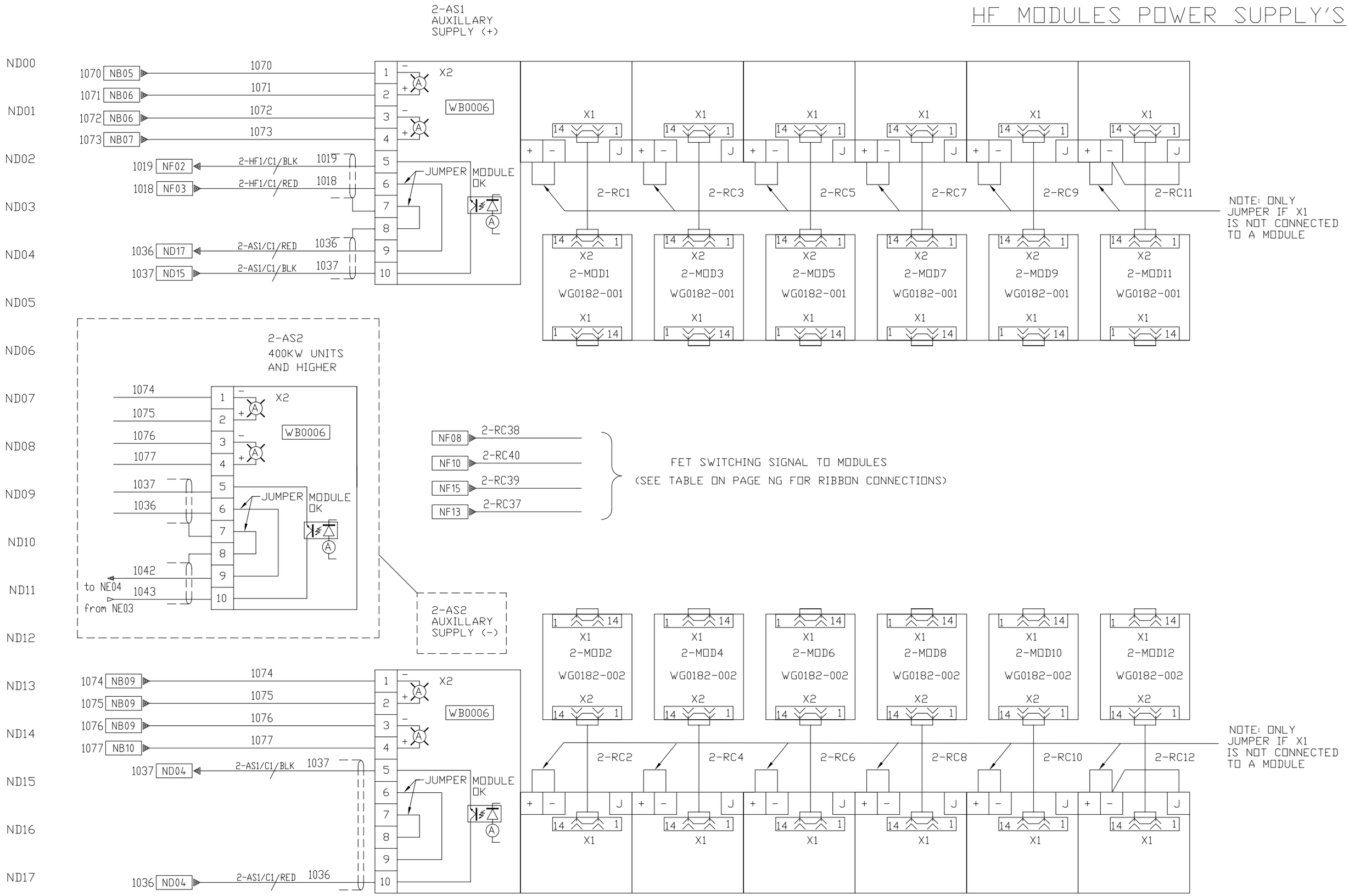

THERMATOOL®	SIZE A2	DIV NO 1	DWG NO WW5128	REV A
	SCALE 1:1	DO NOT SCALE DRAWING COPY	SHEET ND	

ENG-REF:

HF MODULES POWER SUPPLY'S
400KW UNITS AND HIGHER

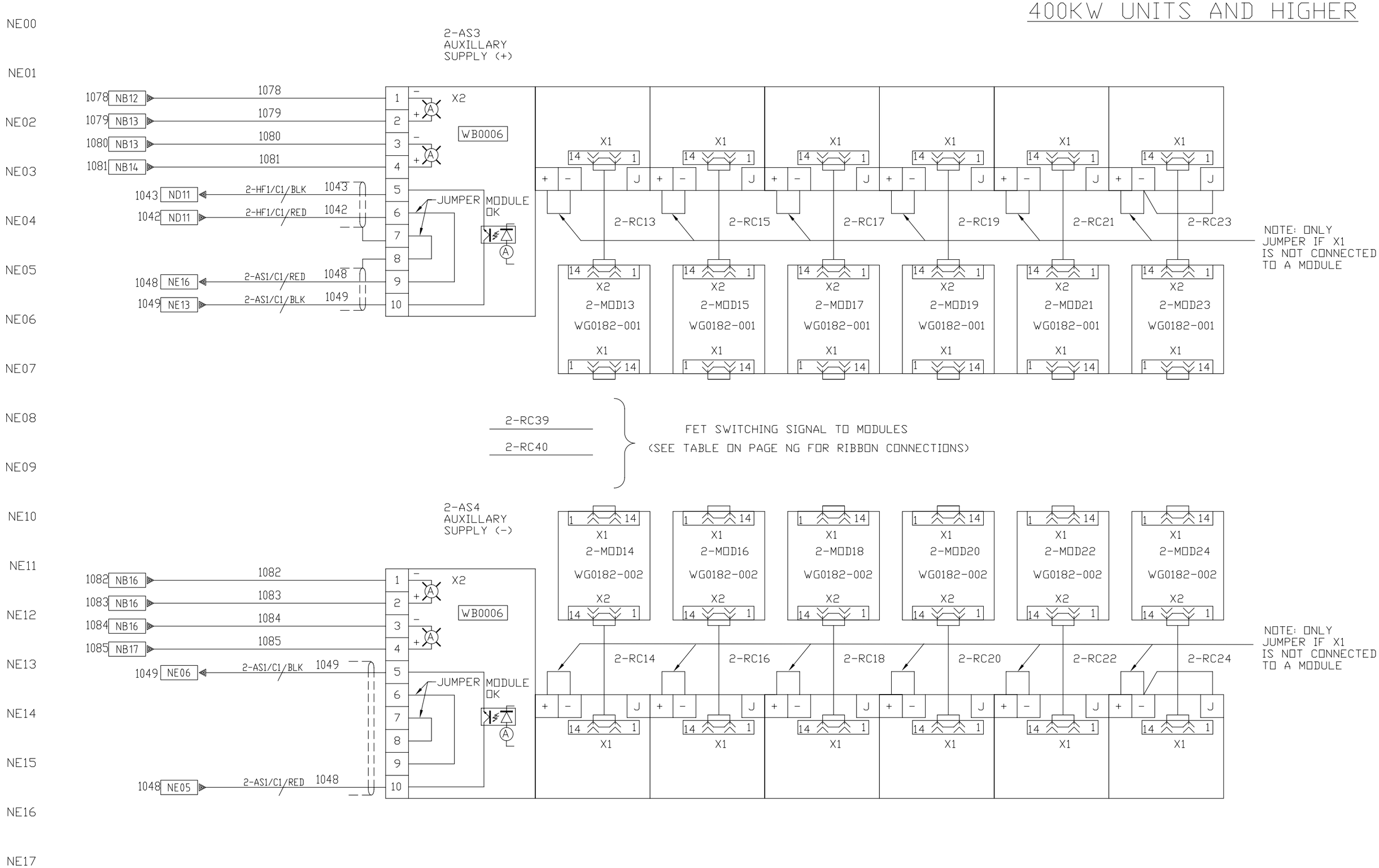

THERMATOOL®	SIZE A2	DIV NO 1	DWG NO WW5128	REV A
	SCALE 1:1	DO NOT SCALE DRAWING COPY	SHEET NE	

ENG-REF:

2-HF1 CONTROL BOARD

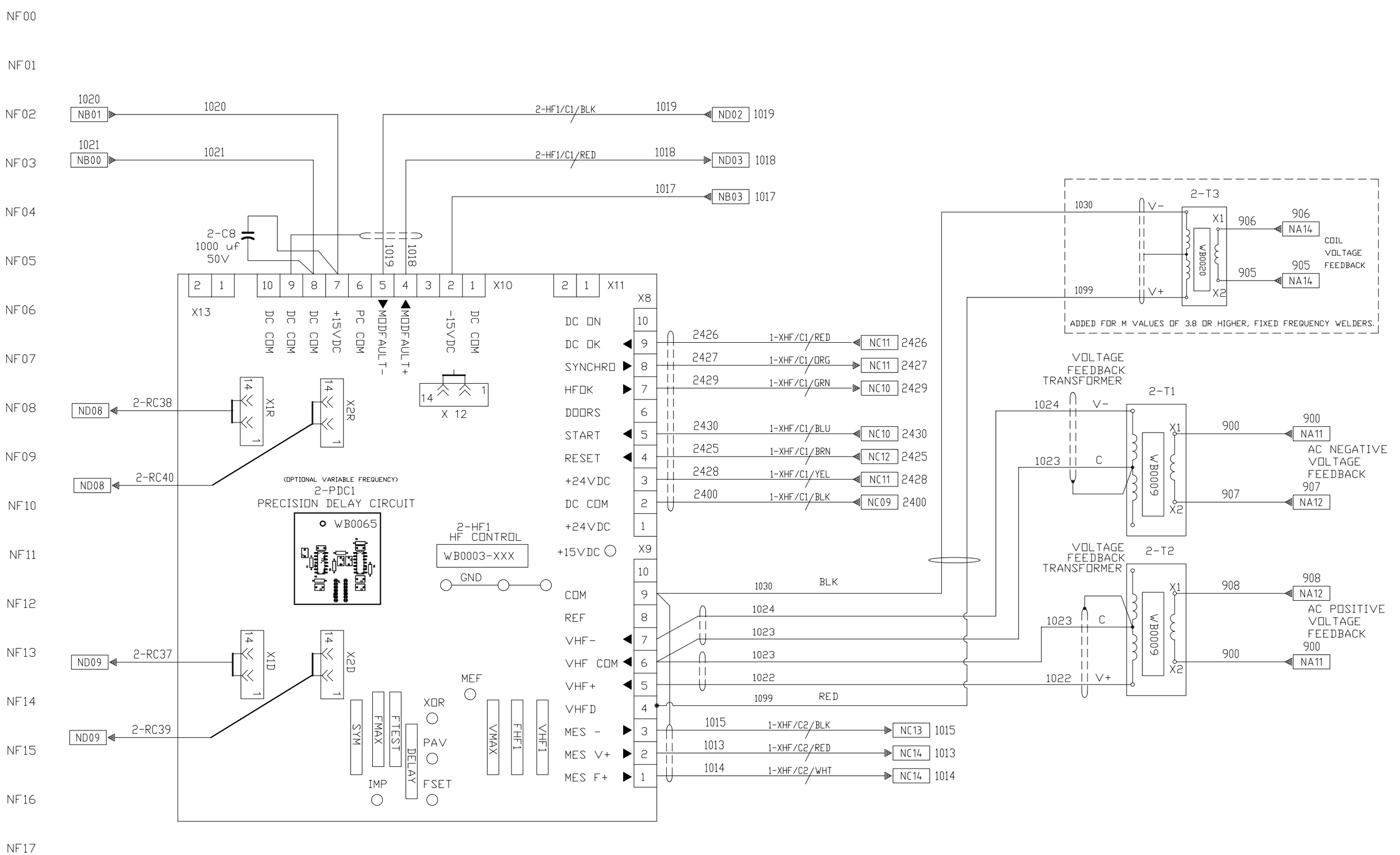

THERMATOOL®	SIZE A2	DIV NO 1	DWG NO WW5128S	REV A
	SCALE 1:1	DO NOT SCALE DRAWING COPY	SHEET NF	

ENG-REF:

2-HF1 BOARD TO HF MODULE CONNECTIONS

NG00

NG01

NG02

NG03

NG04

NG05

NG06

NG07

NG08

NG09

NG10

NG11

NG12

NG13

NG14

NG15

NG16

NG17

RIBBON CABLE CONNECTIONS FROM 2-HF1 BOARD TO HF MODULES:

CABINET	NUMBER OF MODULES	2-RC38 FROM 2-HF1 (X1R) TO	2-RC40 FROM 2-HF1 (X2R) TO	2-RC37 FROM 2-HF1 (X1D) TO	2-RC39 FROM 2-HF1 (X2D) TO
RF12	2	2-MOD1	-	2-MOD2	-
RF12	4	2-MOD1	2-MOD3	2-MOD2	2-MOD4
RF12	6	2-MOD1,3	2-MOD5	2-MOD2,4	2-MOD6
RF12	8	2-MOD1,3	2-MOD5,7	2-MOD2,4	2-MOD6,8
RF12	10	2-MOD1,3,5	2-MOD7,9	2-MOD2,4,6	2-MOD8,10
RF12 / RF24	12	2-MOD1,3,5	2-MOD7,9,11	2-MOD2,4,6	2-MOD8,10,12
RF24	14	2-MOD1,3,5,7	2-MOD7,9,11	2-MOD2,4,6,8	2-MOD10,12,14
RF24	16	2-MOD1,3,5,7	2-MOD9,11,13,15	2-MOD2,4,6,8	2-MOD10,12,14,16
RF24	18	2-MOD1,3,5,7,9	2-MOD11,13,15,17	2-MOD2,4,6,8,10	2-MOD12,14,16,18
RF24	20	2-MOD1,3,5,7,9	2-MOD11,13,15,17,19	2-MOD2,4,6,8,10	2-MOD12,14,16,18,20
RF24	22	2-MOD1,3,5,7,9,11	2-MOD13,15,17,19,21	2-MOD2,4,6,8,10,12	2-MOD14,16,18,20,22
RF24	24	2-MOD1,3,5,7,9,11	2-MOD13,15,17,19,21,23	2-MOD2,4,6,8,10,12	2-MOD14,16,18,20,22,24

THERMATOOL®

SIZE	DIV NO	DWG NO	REV
A2	1	WW5128	A
SCALE 1:1		DO NOT SCALE DRAWING COPY	SHEET NG

ENG-REF:

LOAD MATCH MOTORS

FIXED FREQUENCY HF12 AND HF24 GENERATOR CABINETS

NH00
NH01
NH02
NH03
NH04
NH05
NH06
NH07
NH08
NH09
NH10
NH11
NH12
NH13
NH14
NH15
NH16
NH17

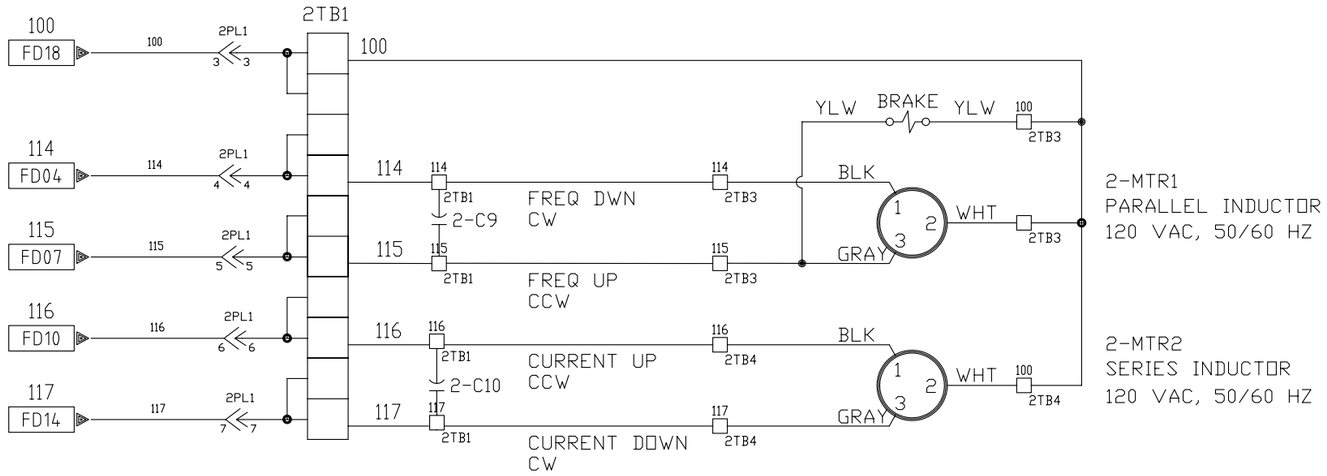

NOTE:
1. WIRING SHOWN IS FOR PANASONIC MOTORS.
2. BLUE WIRES ARE NOT CONNECTED, CUT BACK AND INSULATE ENDS.
3. MOTORS ELECTRICALLY CONNECT THE SAME WAY, DIRECTION OF ROTATION IS BASED ON GEARING.
4. FOR HF12 VARIABLE FREQUENCY GENERATORS, 2MTR1 IS LOCATED ON THE POSITIVE SIDE, 2MTR1A THE NEGATIVE SIDE.

THERMATOOL®	SIZE	DIV NO	DWG NO	REV
	A2	1	WW5128S	B
	SCALE	1:1	DO NOT SCALE DRAWING COPY	SHEET NH

ENG-REF: